HONDA

SHOP MANUAL

NSS750

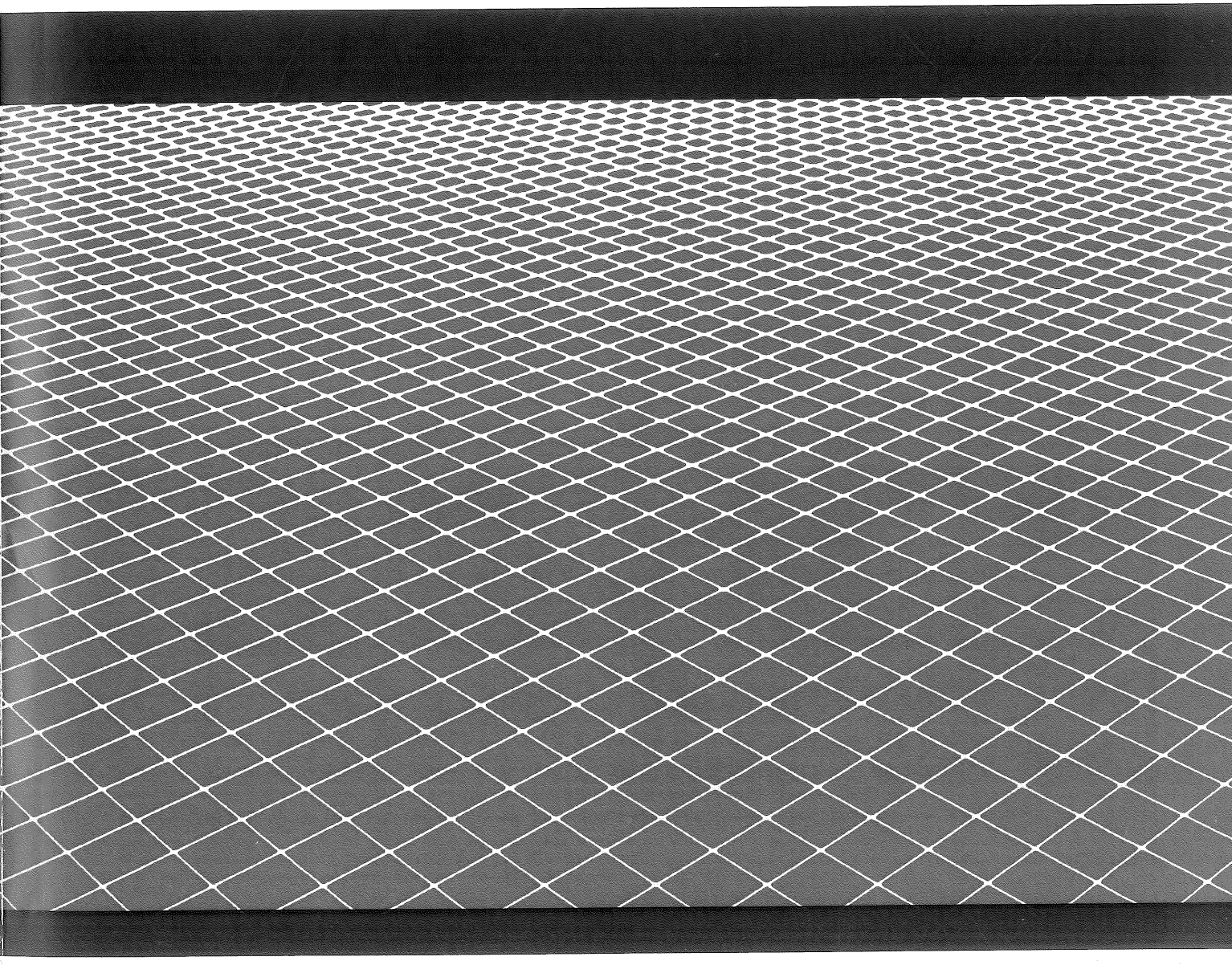

NSS750M

A Few Words About Safety

Service Information

The service and repair information contained in this manual is intended for use by qualified, professional technicians. Attempting service or repairs without the proper training, tools, and equipment could cause injury to you or others. It could also damage the vehicle or create an unsafe condition.

This manual describes the proper methods and procedures for performing service, maintenance and repairs. Some procedures require the use of specially designed tools and dedicated equipment. Any person who intends to use a replacement part, service procedure or a tool that is not recommended by Honda, must determine the risks to their personal safety and the safe operation of the vehicle.

If you need to replace a part, use Honda Genuine parts with the correct part number or an equivalent part. We strongly recommend that you do not use replacement parts of inferior quality.

For Your Customer's Safety

Proper service and maintenance are essential to the customer's safety and the reliability of the vehicle. Any error or oversight while servicing a vehicle can result in faulty operation, damage to the vehicle, or injury to others.

⚠WARNING

Improper service or repairs can create an unsafe condition that can cause your customer or others to be seriously hurt or killed.

Follow the procedures and precautions in this manual and other service materials carefully.

For Your Safety

Because this manual is intended for the professional service technician, we do not provide warnings about many basic shop safety practices (e.g., Hot parts–wear gloves). If you have not received shop safety training or do not feel confident about your knowledge of safe servicing practice, we recommend that you do not attempt to perform the procedures described in this manual.

Some of the most important general service safety precautions are given below. However, we cannot warn you of every conceivable hazard that can arise in performing service and repair procedures. Only you can decide whether or not you should perform a given task.

⚠WARNING

Failure to properly follow instructions and precautions can cause you to be seriously hurt or killed.

Follow the procedures and precautions in this manual carefully.

Important Safety Precautions

Make sure you have a clear understanding of all basic shop safety practices and that you are wearing appropriate clothing and using safety equipment. When performing any service task, be especially careful of the following:

- Read all of the instructions before you begin, and make sure you have the tools, the replacement or repair parts, and the skills required to perform the tasks safely and completely.
- Protect your eyes by using proper safety glasses, goggles or face shields any time you hammer, drill, grind, pry or work around pressurized air or liquids, and springs or other stored-energy components. If there is any doubt, put on eye protection.
- Use other protective wear when necessary, for example gloves or safety shoes. Handling hot or sharp parts can cause severe burns or cuts. Before you grab something that looks like it can hurt you, stop and put on gloves.
- Protect yourself and others whenever you have the vehicle up in the air. Any time you lift the vehicle, either with a hoist or a jack, make sure that it is always securely supported. Use jack stands.

Make sure the engine is off before you begin any servicing procedures, unless the instruction tells you to do otherwise. This will help eliminate several potential hazards:

- Carbon monoxide poisoning from engine exhaust. Be sure there is adequate ventilation whenever you run the engine
- Burns from hot parts or coolant. Let the engine and exhaust system cool before working in those areas.
- Injury from moving parts. If the instruction tells you to run the engine, be sure your hands, fingers and clothing are out of the way.

Gasoline vapors and hydrogen gases from batteries are explosive. To reduce the possibility of a fire or explosion, be careful when working around gasoline or batteries.

- Use only a nonflammable solvent, not gasoline, to clean parts.
- Never drain or store gasoline in an open container.
- Keep all cigarettes, sparks, and flames away from the battery and all fuel-related parts.

How To Use This Manual

This manual describes the service procedures for the NSS750.

Sections 1, 2 and 3 apply to the whole motorcycle. Section 2 illustrates procedures for removal/installation of components that may be required to perform service described in the following sections.
Section 4 through 22 describe parts of the motorcycle, grouped according to location.

Follow the Maintenance Schedule (Section 3) recommendations to ensure that the motorcycle is in peak operating condition. Performing the first scheduled maintenance is very important. It compensates for the initial wear that occurs during the break-in period.

Find the section you want on this page, then turn to the table of contents on the first page of the section.

Most sections start with an assembly or system illustration, service information and troubleshooting for the section. The subsequent pages give detailed procedure.

Refer to the troubleshooting in each section according to the malfunction or symptom. In case of an engine trouble, refer to PGM-FI section troubleshooting first.

Your safety, and the safety of others, is very important. To help you make informed decisions we have provided safety messages and other information throughout this manual. Of course, it is not practical or possible to warn you about all the hazards associated with servicing this vehicle.
You must use your own good judgement.
You will find important safety information in a variety of forms including:

- Safety Labels – on the vehicle
- Safety Messages – preceded by a safety alert symbol ⚠ and one of three signal words, DANGER, WARNING, or CAUTION. These signal words mean:

⚠DANGER You WILL be KILLED or SERIOUSLY HURT if you don't follow instructions.

⚠WARNING You CAN be KILLED or SERIOUSLY HURT if you don't follow instructions.

⚠CAUTION You CAN be HURT if you don't follow instructions.

- Instructions – how to service this vehicle correctly and safely.

As you read this manual, you will find information that is preceded by a NOTICE symbol. The purpose of this message is to help prevent damage to your vehicle, other property, or the environment.

ALL INFORMATION, ILLUSTRATIONS, DIRECTIONS AND SPECIFICATIONS INCLUDED IN THIS PUBLICATION ARE BASED ON THE LATEST PRODUCT INFORMATION AVAILABLE AT THE TIME OF APPROVAL FOR PRINTING. Honda Motor Co., Ltd. RESERVES THE RIGHT TO MAKE CHANGES AT ANY TIME WITHOUT NOTICE AND WITHOUT INCURRING ANY OBLIGATION WHATSOEVER. NO PART OF THIS PUBLICATION MAY BE REPRODUCED WITHOUT WRITTEN PERMISSION. THIS MANUAL IS WRITTEN FOR PERSONS WHO HAVE ACQUIRED BASIC KNOWLEDGE OF MAINTENANCE ON Honda MOTORCYCLES, MOTOR SCOOTERS OR ATVS.

© Honda Motor Co., Ltd.
SERVICE PUBLICATION OFFICE

Date of Issue: January, 2021

SYMBOLS

The symbols used throughout this manual show specific service procedures. If supplementary information is required pertaining to these symbols, it would be explained specifically in the text without the use of the symbols.

	Replace the part(s) with new one(s) before assembly.
	Use the recommended engine oil, unless otherwise specified.
	Use molybdenum oil solution (mixture of the engine oil and molybdenum grease in a ratio of 1:1).
	Use multi-purpose grease (lithium based multi-purpose grease NLGI #2 or equivalent).
	Use molybdenum disulfide grease (containing more than 3% molybdenum disulfide, NLGI #2 or equivalent). Example: • Molykote® BR-2 plus manufactured by Dow Corning U.S.A.
	Use molybdenum disulfide paste (containing more than 40% molybdenum disulfide, NLGI #2 or equivalent). Example: • Molykote® G-n Paste manufactured by Dow Corning U.S.A. • Pro Honda M-77 Assembly Paste (Moly) (U.S.A. only) • Rocol ASP manufactured by Rocol Limited, U.K. • Moly Paste 500 manufactured by Sumico Lubricant, Japan
	Use silicone grease.
	Apply locking agent. Use a medium strength locking agent unless otherwise specified.
	Apply sealant.
	Use DOT 4 brake fluid. Use the recommended brake fluid unless otherwise specified.
	Use fork or suspension fluid.

CONTENTS

	GENERAL INFORMATION	1
	FRAME/BODY PANELS/EXHAUST SYSTEM	2
	MAINTENANCE	3
ENGINE/ELECTRICAL	PGM-FI SYSTEM	4
	IGNITION SYSTEM	5
	ELECTRIC STARTER	6
	FUEL SYSTEM	7
	COOLING SYSTEM	8
	LUBRICATION SYSTEM	9
	CYLINDER HEAD/VALVES	10
	DUAL CLUTCH TRANSMISSION (DCT)	11
	ALTERNATOR/STARTER CLUTCH	12
	CRANKCASE/TRANSMISSION/BALANCER	13
	CRANKSHAFT/PISTON/CYLINDER	14
	ENGINE REMOVAL/INSTALLATION	15
CHASSIS	FRONT WHEEL/SUSPENSION/STEERING	16
	REAR WHEEL/SUSPENSION	17
	HYDRAULIC BRAKE	18
	ANTI-LOCK BRAKE SYSTEM (ABS)	19
FRAME ELECTRICAL	BATTERY/CHARGING SYSTEM	20
	LIGHTS/METERS/SWITCHES	21
	Honda SMART Key SYSTEM	22
	WIRING DIAGRAM	23
	INDEX	

MEMO

SERVICE RULES 1-2
MODEL IDENTIFICATION 1-3
SPECIFICATIONS 1-4
TORQUE VALUES 1-10
LUBRICATION & SEAL POINTS 1-16
SPECIAL TOOL LIST 1-18
CABLE & HARNESS ROUTING 1-20
EMISSION CONTROL SYSTEMS 1-54
TECHNICAL FEATURES 1-56

SERVICE RULES

1. Use Honda Genuine or Honda-recommended parts and lubricants or their equivalents. Parts that don't meet Honda's design specifications may cause damage to the motorcycle.
2. Use the special tools designed for this product to avoid damage and incorrect assembly.
3. Use only metric tools when servicing the motorcycle. Metric bolts, nuts and screws are not interchangeable with English fasteners.
4. Install new gaskets, O-rings, cotter pins, and lock plates when reassembling.
5. When tightening bolts or nuts, begin with the larger diameter or inner bolt first. Then tighten to the specified torque diagonally in incremental steps unless a particular sequence is specified.
6. Clean parts in cleaning solvent upon disassembly. Lubricate any sliding surfaces before reassembly.
7. After reassembly, check all parts for proper installation and operation.
8. Route all electrical wires as show in the Cable and Harness Routing (page 1-20).
9. Do not bend or twist control cables. Damaged control cables will not operate smoothly and may stick or bind.

ABBREVIATION

Throughout this manual, the following abbreviations are used to identify the respective parts or systems.

Abbrev. term	Full term
A/F sensor	Air/Fuel ratio sensor
APS	Accelerator Position Sensor
BCU	Body Control Unit
CAN	Controller Area Network
ABS	Anti-lock Brake System
CKP sensor	Crankshaft Position sensor
DCT	Dual Clutch Transmission
DLC	Data Link Connector
DTC	Diagnostic Trouble Code
ECM	Engine Control Module
ECT sensor	Engine Coolant Temperature sensor
EOP sensor	Engine Oil Pressure sensor
EOP switch	Engine Oil Pressure switch
EOT sensor	Engine Oil Temperature sensor
ESL unit	Electric Steering Lock unit
ESS	Emergency Stop Signal
EVAP	Evaporative Emission
GST	General Scan Tool
HSTC	Honda Selectable Torque Control
HSVCs	Honda Smartphone Voice Control system
IAT sensor	Intake Air Temperature sensor
MAP sensor	Manifold Absolute Pressure sensor
MCS	Motorcycle Communication System
MIL	Malfunction Indicator Lamp
OBD	On-Board Diagnostic
PGM-FI	Programmed Fuel Injection
SCS short connector	Service Check Signal short connector
TCM	Transmission Control Module
TBW	Throttle By Wire
TP sensor	Throttle Position sensor
TR sensor	Transmission Range Sensor
VS sensor	Vehicle Speed sensor

DESTINATION CODE

Throughout this manual, the following codes are used to identify individual models for each region.

DESTINATION CODE	REGION
ED	European direct sales
GS	Gulf countries
KO	Korea
FO	Taiwan
CH	China

MODEL IDENTIFICATION

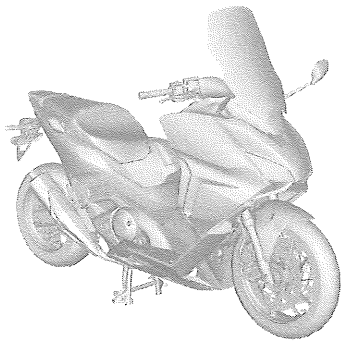

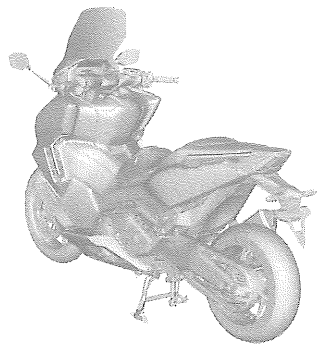

SERIAL NUMBERS/LABELS

The Vehicle Identification Number (V.I.N) [1] is stamped on the right side of the steering head.

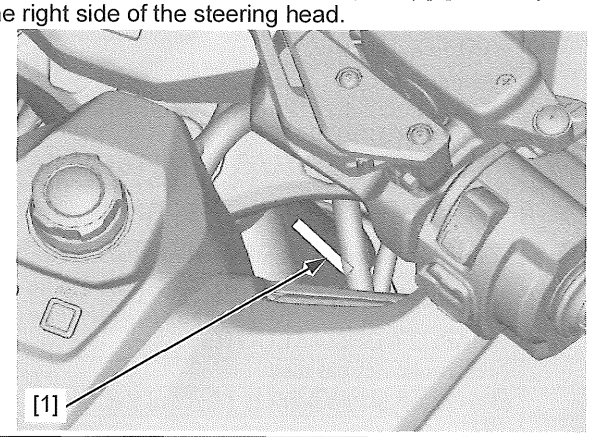

The engine serial number [1] is stamped on the lower back side of the crankcase.

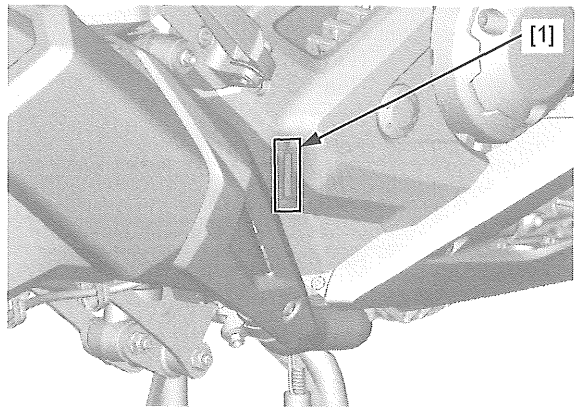

The throttle body identification number [1] is stamped on the throttle body as shown.

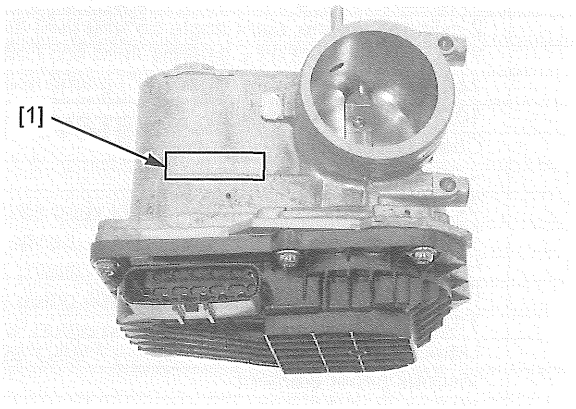

The color label [1] is attached on the right side of the luggage box. When ordering color-coded parts, always specify the designated color code.

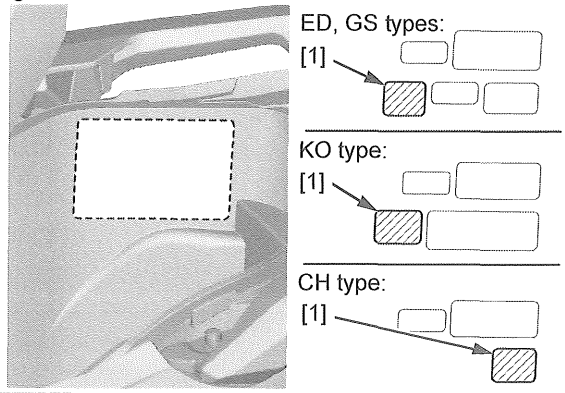

The emission information label [1] (KO type) is attached on the right side of the luggage box.

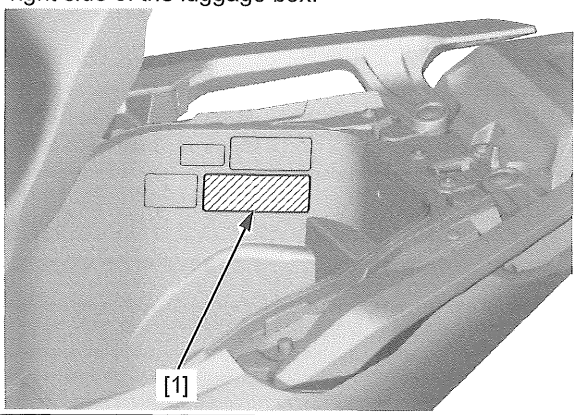

SPECIFICATIONS

GENERAL SPECIFICATIONS

ITEM				SPECIFICATIONS
DIMENSIONS	Overall length			2,200 mm (86.6 in)
	Overall width			790 mm (31.1 in)
	Overall height		Except CH types	1,485 mm (58.5 in)
			CH type	1,350 mm (53.1 in)
	Wheelbase			1,580 mm (62.2 in)
	Seat height			790 mm (31.1 in)
	Footpeg height			334 mm (13.1 in)
	Ground clearance			135 mm (5.3 in)
	Curb weight			235 kg (518 lbs)
	Maximum weight capacity			199 kg (439 lbs)
FRAME	Frame type			Diamond
	Front suspension			Telescopic fork
	Front axle travel			107 mm (4.2 in)
	Rear suspension			Swingarm
	Rear axle travel			120 mm (4.7 in)
	Front tire size			120/70R17M/C 58H
	Rear tire size			160/60R15M/C 67H
	Front tire brand	BRIDGESTONE	Except KO type	BATTLAX SPORT TOURING T31F J
		PIRELLI	KO type	DIABLO ROSSO SCOOTER
	Rear tire brand	BRIDGESTONE	Except KO type	BATTLAX SPORT TOURING T31R J
		PIRELLI	KO type	DIABLO ROSSO SCOOTER
	Front brake			Hydraulic double disc
	Rear brake			Hydraulic single disc
	Caster angle			27°
	Trail length			104 mm (4.1 in)
	Fuel tank capacity			13.2 liters (3.49 US gal, 2.90 Imp gal)
ENGINE	Cylinder arrangement			2 cylinders in-line, slant angle 55°
	Bore and stroke			77.0 x 80.0 mm (3.03 x 3.15 in)
	Displacement			745 cm^3 (45.445 cu-in)
	Compression ratio			10.7:1
	Valve train			Chain driven, OHC with rocker arm
	Intake valve	opens	at 1 mm (0.04 in) lift	– 23° BTDC
		closes	at 1 mm (0.04 in) lift	30° ABDC
	Exhaust valve	opens	at 1 mm (0.04 in) lift	27° BBDC
		closes	at 1 mm (0.04 in) lift	– 12° ATDC
	Lubrication system			Forced pressure and wet sump
	Oil pump type			Trochoid
	Cooling system			Liquid cooled
	Air filtration			Viscous paper element
	Engine dry weight			67.9 kg (149.7 lbs)
	Firing order			1 - 2
FUEL DELIVERY SYSTEM	Type			PGM-FI (Programmed Fuel Injection)
	Throttle bore			38 mm (1.5 in)

ITEM			SPECIFICATIONS
DRIVE TRAIN	Clutch system		2 Multi-plate wet clutches
	Clutch operation system		Automatic
	Transmission		Constant mesh, 6-speeds
	Primary reduction		1.921 (73/38)
	Final reduction		2.235 (38/17)
	Gear ratio	1st	2.666 (40/15)
		2nd	1.904 (40/21)
		3rd	1.454 (32/22)
		4th	1.178 (33/28)
		5th	0.967 (30/31)
		6th	0.815 (31/38)
	Gearshift pattern		Automatic and electric shift (left hand operated) return system, N - 1 - 2 - 3 - 4 - 5 - 6
ELECTRICAL	Ignition system		Full transistorized ignition
	Starting system		Electric starter motor
	Charging system		Triple phase output alternator
	Regulator/rectifier		FET shorted/triple phase full wave rectification
	Lighting system		Battery

PGM-FI SPECIFICATIONS

ITEM	SPECIFICATIONS
ECT sensor resistance (at 40°C/104°F)	1.0 – 1.3 kΩ
IAT sensor resistance (at 40°C/104°F)	1.0 – 1.3 kΩ
Fuel injector resistance (at 20°C/68°F)	11 – 13 Ω

IGNITION SYSTEM SPECIFICATIONS

ITEM	SPECIFICATIONS
Spark plug (Iridium)	IFR6G-11K (NGK)
Spark plug gap	1.00 – 1.10 mm (0.039 – 0.043 in)
Ignition coil peak voltage	100 V minimum
Ignition timing ("F" mark)	12° BTDC at idle

FUEL SYSTEM SPECIFICATIONS

ITEM	SPECIFICATIONS
Throttle body identification number	GNE0A
Idle speed	1,200 ± 100 min^{-1} (rpm)
Fuel pressure at idle	343 kPa (3.5 kgf/cm^2, 50 psi)
Fuel pump flow (at 12 V)	319 cm^3 (10.8 US oz, 11.2 Imp oz) minimum/10 seconds
EVAP purge control solenoid valve resistance (at 20°C/68°F)	30 – 34 Ω

COOLING SYSTEM SPECIFICATIONS

ITEM		SPECIFICATIONS
Coolant capacity	Radiator and engine	1.44 liters (1.52 US qt, 1.27 Imp qt)
	At draining	1.36 liters (1.44 US qt, 1.20 Imp qt)
	Reserve tank	0.13 liter (0.14 US qt, 0.11 Imp qt)
Radiator cap relief pressure		108 – 137 kPa (1.1 – 1.4 kgf/cm^2, 16 – 20 psi)
Thermostat	Begin to open	80 – 84°C (176 – 183°F)
	Fully open	95°C (203°F)
	Valve lift	8 mm (0.3 in) minimum
Recommended antifreeze		High quality ethylene glycol antifreeze containing silicate-free corrosion inhibitors
Standard coolant concentration		1:1 mixture with distilled water

LUBRICATION SYSTEM SPECIFICATIONS

Unit: mm (in)

ITEM		STANDARD	SERVICE LIMIT
Engine oil capacity	After draining	3.1 liters (3.3 US qt, 2.7 Imp qt)	–
	After draining/ filter change	3.4 liters (3.6 US qt, 3.0 Imp qt)	–
	After disassembly	4.0 liters (4.2 US qt, 3.5 Imp qt)	–
Recommended engine oil		Honda "4-stroke motorcycle oil" or an equivalent motor oil. API service classification: SJ or higher JASO T903 standard: MA Viscosity: SAE 10W-30	–
Oil pressure at engine oil filter		470 kPa (4.8 kgf/cm^2, 68 psi) at 5,000 min^{-1} (rpm)/(80°C/176°F)	–
Engine oil pump rotor	Tip clearance	0.15 (0.006)	0.20 (0.008)
Clutch oil pump rotor	Tip clearance	0.15 (0.006)	–

CYLINDER HEAD/VALVES SPECIFICATIONS

Unit: mm (in)

ITEM			STANDARD	SERVICE LIMIT
Cylinder compression at 470 min^{-1} (rpm)			1,800 kPa (18.4 kgf/cm^2, 261 psi)	–
Valve clearance		IN	0.17 ± 0.02 (0.007 ± 0.001)	–
		EX	0.28 ± 0.02 (0.011 ± 0.001)	–
Rocker arm, rocker arm shaft	Rocker arm I.D.		20.012 – 20.030 (0.7879 – 0.7886)	20.041 (0.7890)
	Rocker arm shaft O.D.		19.972 – 19.993 (0.7863 – 0.7871)	–
Cam chain tensioner wedge B length			–	6.0 (0.24)
Camshaft	Cam lobe height	IN	34.83 – 34.99 (1.371 – 1.378)	34.80 (1.370)
		EX	34.96 – 35.12 (1.376 – 1.383)	34.93 (1.375)
	Camshaft journal O.D.		41.935 – 41.950 (1.6510 – 1.6516)	41.927 (1.6507)
Valve, valve guide	Valve stem O.D.	IN	4.975 – 4.990 (0.1959 – 0.1965)	4.965 (0.1955)
		EX	4.965 – 4.980 (0.1955 – 0.1961)	4.955 (0.1951)
	Valve guide I.D.	IN/EX	5.000 – 5.012 (0.1969 – 0.1973)	5.042 (0.1985)
	Valve guide projection above cylinder head	IN	17.7 – 18.0 (0.70 – 0.71)	–
		EX	19.6 – 19.9 (0.77 – 0.78)	–
	Valve seat width	IN	0.90 – 1.10 (0.035 – 0.043)	1.5 (0.06)
		EX	1.30 – 1.50 (0.051 – 0.059)	1.9 (0.07)
Valve spring free length			50.33 (1.981)	49.32 (1.942)
Cylinder head warpage			–	0.10 (0.004)
Cylinder head camshaft journal I.D.			41.995 – 42.019 (1.6533 – 1.6543)	42.027 (1.6546)

DUAL CLUTCH TRANSMISSION SPECIFICATIONS

Unit: mm (in)

ITEM	STANDARD	SERVICE LIMIT
Clutch clearance	0.99 – 1.19 (0.039 – 0.047)	2.0 (0.08)

ALTERNATOR/STARTER CLUTCH SPECIFICATIONS

Unit: mm (in)

ITEM	STANDARD	SERVICE LIMIT
Starter driven gear boss O.D.	57.749 – 57.768 (2.2736 – 2.2743)	–
Starter clutch outer I.D.	74.412 – 74.442 (2.9296 – 2.9308)	–

CRANKCASE/TRANSMISSION/BALANCER SPECIFICATIONS

Unit: mm (in)

ITEM			STANDARD	SERVICE LIMIT
Transmission	Gear I.D.	M5	33.000 – 33.025 (1.2992 – 1.3002)	–
		M6	43.000 – 43.025 (1.6929 – 1.6939)	–
		C1	31.010 – 31.035 (1.2209 – 1.2218)	–
		C2	25.000 – 25.021 (0.9843 – 0.9851)	–
		C3, C4	31.000 – 31.025 (1.2205 – 1.2215)	–
	Gear bushing O.D.	M5	32.955 – 32.980 (1.2974 – 1.2984)	–
		M6	42.950 – 42.975 (1.6909 – 1.6919)	–
		C1	30.970 – 30.995 (1.2193 – 1.2203)	–
		C2	24.959 – 24.980 (0.9826 – 0.9835)	–
		C3, C4	30.950 – 30.975 (1.2185 – 1.2195)	–
	Gear bushing I.D.	M5	29.985 – 30.006 (1.1805 – 1.1813)	–
		M6	40.007 – 40.028 (1.5751 – 1.5759)	–
		C1	28.000 – 28.021 (1.1024 – 1.1032)	–
		C2	21.985 – 22.006 (0.8655 – 0.8664)	–
	Inner mainshaft O.D.	At M5 bushing	29.957 – 29.970 (1.1794 – 1.1799)	–
	Outer mainshaft O.D.	At M6 bushing	39.975 – 39.991 (1.5738 – 1.5744)	–
	Countershaft O.D.	At C1 bushing	27.967 – 27.980 (1.1011 – 1.1016)	–
		At C2 bushing	21.952 – 21.965 (0.8643 – 0.8648)	–
Shift fork, fork shaft	Fork I.D.		12.000 – 12.018 (0.4724 – 0.4731)	12.03 (0.474)
	Claw thickness		5.93 – 6.00 (0.233 – 0.236)	5.83 (0.23)
	Shift fork shaft O.D.		11.957 – 11.968 (0.4707 – 0.4712)	–

CRANKSHAFT/PISTON/CYLINDER SPECIFICATIONS

Unit: mm (in)

ITEM			STANDARD	SERVICE LIMIT
Crankshaft	Connecting rod side clearance		0.15 – 0.35 (0.006 – 0.014)	0.45 (0.018)
	Runout	Right side	–	0.03 (0.001)
		Left side	–	0.03 (0.001)
	Main journal bearing oil clearance		0.019 – 0.037 (0.0007 – 0.0015)	0.05 (0.002)
Cylinder	I.D.		77.000 – 77.015 (3.0315 – 3.0321)	77.10 (3.035)
	Warpage		–	0.10 (0.004)
Piston, piston pin, piston rings	Piston O.D. at 16 mm (0.6 in) from bottom		76.972 – 76.982 (3.0304 – 3.0309)	76.89 (3.027)
	Piston pin bore I.D.		18.010 – 18.013 (0.7091 – 0.7092)	18.020 (0.7094)
	Piston pin O.D.		17.996 – 18.000 (0.7085 – 0.7087)	17.980 (0.7079)
	Piston ring end gap	Top	0.16 – 0.21 (0.006 – 0.008)	0.31 (0.012)
		Second	0.35 – 0.50 (0.014 – 0.020)	0.60 (0.024)
		Oil (side rail)	0.10 – 0.35 (0.004 – 0.014)	0.55 (0.022)
	Piston ring-to-ring groove clearance	Top	0.065 – 0.090 (0.0026 – 0.0035)	–
		Second	0.030 – 0.060 (0.0012 – 0.0024)	–
Connecting rod small end I.D.			17.964 – 17.977 (0.7072 – 0.7078)	17.985 (0.7081)
Crankpin bearing oil clearance			0.026 – 0.044 (0.0010 – 0.0017)	0.064 (0.0025)

FRONT WHEEL/SUSPENSION/STEERING SPECIFICATIONS

Unit: mm (in)

ITEM			STANDARD	SERVICE LIMIT
Cold tire pressure	Driver only		250 kPa (2.50 kgf/cm², 36 psi)	–
	Driver and passenger		250 kPa (2.50 kgf/cm², 36 psi)	–
Axle runout			–	0.2 (0.01)
Wheel rim runout		Radial	–	2.0 (0.08)
		Axial	–	2.0 (0.08)
Wheel balance weight			–	60 g (2.1 oz) max.
Fork	Spring free length		403.8 (15.90)	395.7 (15.58)
	Recommended fork fluid		Fork fluid (10W)	–
	Fluid level		Left: 155 (6.1)/Right: 71 (2.8)	–
	Fluid capacity		Left: 568 cm³ (19.2 US oz, 20.0 Imp oz) Right: 550 cm³ (18.6 US oz, 19.4 Imp oz)	–

REAR WHEEL/SUSPENSION SPECIFICATIONS

Unit: mm (in)

ITEM			STANDARD	SERVICE LIMIT
Cold tire pressure	Driver only		250 kPa (2.50 kgf/cm², 36 psi)	–
	Driver and passenger		250 kPa (2.50 kgf/cm², 36 psi)	–
Axle runout			–	0.2 (0.01)
Wheel rim runout		Radial	–	2.0 (0.08)
		Axial	–	2.0 (0.08)
Wheel balance weight			–	60 g (2.1 oz) max.
Drive chain	Size/link		DID520V0-118LE	–
	Slack		40 – 45 (1.6 – 1.8)	–
Shock absorber	Pre-load adjuster standard position		4th position from minimum	–

HYDRAULIC BRAKE SPECIFICATIONS

Unit: mm (in)

ITEM			STANDARD	SERVICE LIMIT
Front	Specified brake fluid		DOT 4 brake fluid	–
	Brake disc thickness		4.4 – 4.6 (0.17 – 0.18)	3.5 (0.14)
	Brake disc warpage		–	0.30 (0.012)
	Master cylinder I.D.		14.000 – 14.043 (0.5512 – 0.5529)	–
	Master piston O.D.		13.957 – 13.984 (0.5495 – 0.5506)	–
	Caliper cylinder I.D.	Upper	30.230 – 30.280 (1.1902 – 1.1921)	–
		Lower	27.000 – 27.050 (1.0630 – 1.0650)	–
	Caliper piston O.D.	Upper	30.148 – 30.198 (1.1869 – 1.1889)	–
		Lower	26.918 – 26.968 (1.0598 – 1.0617)	–
Rear	Specified brake fluid		DOT 4 brake fluid	–
	Brake disc thickness		4.8 – 5.2 (0.19 – 0.20)	4.0 (0.16)
	Brake disc warpage		–	0.30 (0.012)
	Master cylinder I.D.		12.700 – 12.743 (0.5000 – 0.5017)	–
	Master piston O.D.		12.657 – 12.684 (0.4983 – 0.4994)	–
	Caliper cylinder I.D.		38.18 – 38.23 (1.503 – 1.505)	–
	Caliper piston O.D.		38.098 – 38.148 (1.4999 – 1.5019)	–

BATTERY/CHARGING SYSTEM SPECIFICATIONS

ITEM			SPECIFICATIONS
Battery	Type		YTZ12S
	Capacity		12 V – 11 Ah (10HR)/11.6 Ah (20HR)
	Current leakage		1.1 mA maximum
	Voltage (20°C/68°F)	Fully charged	13.0 – 13.2 V
		Needs charging	Below 12.4 V
	Charging current	Normal	1.1 A/5 – 10 h
		Quick	5.5 A/1 h
Alternator	Capacity		0.51 kW/5,000 min^{-1} (rpm)
	Charging coil resistance (20°C/68°F)		0.1 – 0.5 Ω

LIGHTS/METERS/SWITCHES SPECIFICATIONS

ITEM			SPECIFICATIONS
Bulbs	Except CH types: Headlight (high/low)		LED
	CH type: Headlight (high/low)/position light		LED
	Brake/taillight		LED
	License light		LED
	Except CH types: Front turn signal light/ position light		LED
	CH type: Front turn signal light		LED
	Rear turn signal light		LED
	Instrument light		LED
	Turn signal indicator		LED
	Neutral indicator		LED
	MIL		LED
	ESL indicator		LED
	ABS indicator		LED
	Honda SMART Key indicator		LED
	Torque control indicator		LED
	Torque control OFF indicator		LED
	Alarm indicator		LED
Fuse	Main fuse		30 A
	Sub fuse		30 A x 3, 15 A x 1, 10 A x 10
Fuel level sensor resistance		Full	7 – 11 Ω
		Empty	384 – 396 Ω
Open air temperature sensor resistance 25°C (77°F)			4.9 – 5.1 kΩ

TORQUE VALUES

STANDARD TORQUE VALUES

FASTENER TYPE	TORQUE N·m (kgf·m, lbf·ft)	FASTENER TYPE	TORQUE N·m (kgf·m, lbf·ft)
5 mm bolt and nut	5.2 (0.5, 3.8)	5 mm screw	4.2 (0.4, 3.1)
6 mm bolt (Include SH flange bolt) and nut	10 (1.0, 7)	6 mm screw	9.0 (0.9, 6.6)
		6 mm flange bolt (Include NSHF) and nut	12 (1.2, 9)
8 mm bolt and nut	22 (2.2, 16)		
10 mm bolt and nut	34 (3.5, 25)	8 mm flange bolt and nut	27 (2.8, 20)
12 mm bolt and nut	54 (5.5, 40)	10 mm flange bolt and nut	39 (4.0, 29)

ENGINE & FRAME TORQUE VALUES

FRAME BODY PANELS/EXHAUST SYSTEM

ITEM	Q'TY	THREAD DIA. (mm)	TORQUE N·m (kgf·m, lbf·ft)	REMARKS
Windscreen bolt	4	5	0.8 (0.1, 0.6)	
Pillion step socket bolt	4	8	32 (3.3, 24)	
Rear reflector nut	1	5	1.7 (0.2, 1.3)	
Centerstand mounting bolt	1	6	12 (1.2, 9)	
Sidestand pivot bolt	1	10	10 (1.0, 7)	
Sidestand pivot nut	1	10	39 (4.0, 29)	Self-lock nut
Exhaust pipe stud bolt	3	8	–	See page 2-35
Exhaust pipe joint nut	3	8	28 (2.9, 21)	See page 2-36
Muffler cover bolt	1	6	10 (1.0, 7)	
Muffler band bolt	1	8	17.5 (1.8, 13)	
Grab rail mounting bolt	4	8	26 (2.7, 19)	
Luggage box light switch stay screw	1	3	0.4 (0.1, 0.3)	
Seat open switch screw	1	3	1.5 (0.2, 1.1)	
Fuel lid open switch screw	1	3	1.5 (0.2, 1.1)	
Combination meter mounting screw	4	5	1.0 (0.1, 0.7)	

MAINTENANCE

ITEM	Q'TY	THREAD DIA. (mm)	TORQUE N·m (kgf·m, lbf·ft)	REMARKS
Air cleaner housing cover screw	5	8	1.1 (0.1, 0.8)	Tapping screw
Spark plug	2	14	22 (2.2, 16)	
Valve adjusting screw lock nut	8	7	14 (1.4, 10)	Apply engine oil to the threads and seating surface.
Camshaft maintenance cap	1	36	4.0 (0.4, 3.0)	See page 3-8
Timing hole cap	1	14	10 (1.0, 7)	Apply grease to the threads.
Crankshaft hole cap	1	30	15 (1.5, 11)	Apply grease to the threads.
Engine oil drain bolt	1	12	30 (3.1, 22)	
Oil filter boss (crankcase side)	1	20	–	See page 3-10 Apply locking agent to the threads. Coating width; 6.5 ± 0.5 mm (0.26 ± 0.02 in) from tip
Engine oil filter cartridge	1	20	26 (2.7, 19)	Apply engine oil to the threads.
Rear axle nut	1	18	98 (10.0, 72)	Self-lock nut
Drive sprocket bolt	1	10	54 (5.5, 40)	
Driven sprocket nut	5	12	108 (11.0, 80)	Self-lock nut
Parking brake adjuster lock nut	1	8	17 (1.7, 13)	

PGM-FI SYSTEM

ITEM	Q'TY	THREAD DIA. (mm)	TORQUE N·m (kgf·m, lbf·ft)	REMARKS
VS sensor bolt	1	6	12 (1.2, 9)	
MAP sensor screw	1	6	4.9 (0.5, 3.6)	
MAP sensor stay screw	1	6	4.9 (0.5, 3.6)	
IAT sensor screw	2	5	1.0 (0.1, 0.7)	
ECT sensor	1	10	12 (1.2, 9)	
Bank angle sensor bolt	2	6	10 (1.0, 7)	
A/F sensor	1	12	24.5 (2.5, 18)	
Sidestand switch bolt	1	6	10 (1.0, 7)	ALOC bolt; replace with a new one.

ELECTRIC STARTER

ITEM	Q'TY	THREAD DIA. (mm)	TORQUE N·m (kgf·m, lbf·ft)	REMARKS
Starter motor terminal nut/washer	1	6	10 (1.0, 7)	
Starter motor setting bolt	2	5	4.9 (0.5, 3.6)	
Starter motor negative brush mounting screw	1	5	3.7 (0.4, 2.7)	
Starter relay switch socket bolt	2	5	5.1 (0.5, 3.8)	

FUEL SYSTEM

ITEM	Q'TY	THREAD DIA. (mm)	TORQUE N·m (kgf·m, lbf·ft)	REMARKS
Fuel pump mounting nut	5	6	12 (1.2, 9)	For tightening sequence (page 7-10)
Air cleaner connecting hose band screw	1	4	1.5 (0.2, 1.1)	
Insulator band screw	2	5	–	See page 7-11

COOLING SYSTEM

ITEM	Q'TY	THREAD DIA. (mm)	TORQUE N·m (kgf·m, lbf·ft)	REMARKS
Water hose band screw	6	–	–	See page 8-8
Fan motor shroud mounting bolt	3	6	8.4 (0.9, 6.2)	
Fan motor mounting screw	3	4	2.7 (0.3, 2.0)	
Cooling fan mounting nut	1	3	1.0 (0.1, 0.7)	Apply locking agent to the threads.

LUBRICATION SYSTEM

ITEM	Q'TY	THREAD DIA. (mm)	TORQUE N·m (kgf·m, lbf·ft)	REMARKS
Engine oil filter cartridge	1	20	26 (2.7, 19)	Apply engine oil to the threads.

CYLINDER HEAD/VALVES

ITEM	Q'TY	THREAD DIA. (mm)	TORQUE N·m (kgf·m, lbf·ft)	REMARKS
Cylinder head cover socket bolt	3	6	10 (1.0, 7)	
Rocker arm shaft bolt	3	8	29 (3.0, 21)	Apply engine oil to the threads and seating surface.
Cam chain tensioner bolt	2	6	12 (1.2, 9)	
Camshaft cap	1	20	30 (3.0, 22)	
Insulator band screw	2	5	–	See page 10-18
Cylinder head special bolt	6	9	44 (4.5, 32)	Apply molybdenum oil solution to the threads and seating surface.
Cam sprocket bolt	1	10	56 (5.7, 41)	Apply engine oil to the threads and seating surface.

DUAL CLUTCH TRANSMISSION (DCT)

ITEM	Q'TY	THREAD DIA. (mm)	TORQUE N·m (kgf·m, lbf·ft)	REMARKS
Solenoid valve stopper plate bolt	1	6	12 (1.2, 9)	Apply locking agent to the threads. Coating width: See page 1-15
Linear solenoid valve body mounting bolt	6	6	–	For tightening sequence (page 11-41)
Linear solenoid valve wire clamp bolt	2	6	12 (1.2, 9)	Apply locking agent to the threads. Coating width: See page 1-15
Shift spindle angle sensor bolt	1	6	12 (1.2, 9)	
Primary drive gear bolt	1	10	93 (9.5, 69)	Apply engine oil to the threads and seating surface.
Reduction gear cover bolt	3	6	14 (1.4, 10)	
Shift control motor bolt	3	6	14 (1.4, 10)	
Shift drum center bolt	1	8	31 (3.2, 23)	Apply locking agent to the threads. Coating width: See page 1-15
Drum shifter guide plate bolt	2	6	12 (1.2, 9)	Apply locking agent to the threads. Coating width: See page 1-15
Inner/outer mainshaft sensor bolt	2	6	12 (1.2, 9)	
TR sensor bolt	1	6	12 (1.2, 9)	
Clutch EOP sensor	3	10	19.6 (2.0, 14)	
EOT sensor	1	10	14 (1.4, 10)	Apply engine oil to the threads and seating surface.
Neutral switch	1	10	12 (1.2, 9)	

ALTERNATOR/STARTER CLUTCH

ITEM	Q'TY	THREAD DIA. (mm)	TORQUE N·m (kgf·m, lbf·ft)	REMARKS
Flywheel mounting bolt	1	12	157 (16.0, 116)	Left hand thread Apply engine oil to the threads and seating surface.
Starter clutch socket bolt	6	8	30 (3.1, 22)	Apply locking agent to the threads. Coating width: See page 1-15
Alternator stator mounting bolt	4	6	12 (1.2, 9)	Apply locking agent to the threads. Coating width: See page 1-15
Alternator wire clamp bolt	1	6	10 (1.0, 7)	Apply locking agent to the threads. Coating width: See page 1-15

CRANKCASE/TRANSMISSION/BALANCER

ITEM	Q'TY	THREAD DIA. (mm)	TORQUE N·m (kgf·m, lbf·ft)	REMARKS
Mainshaft bearing set plate bolt	3	6	12 (1.2, 9)	Apply locking agent to the threads. Coating width: See page 1-15
Shift drum bearing set plate bolt	2	6	12 (1.2, 9)	Apply locking agent to the threads. Coating width: See page 1-15
Front balancer shaft bearing set plate bolt	3	6	12 (1.2, 9)	Apply locking agent to the threads. Coating width: See page 1-15
Rear balancer shaft bearing set plate bolt	2	6	12 (1.2, 9)	Apply locking agent to the threads. Coating width: See page 1-15
Crankcase main journal bolt (new)	6	9	20 (2.0, 15) + 150°	See page 13-15 Replace with new ones.
Crankcase 10 mm bolt	1	10	39 (4.0, 29)	
Crankcase 8 x 45 mm bolt	1	8	24 (2.4, 18)	Apply locking agent to the threads. Coating width; 6.5 ± 1.0 mm (0.26 ± 0.04 in) from tip
Crankcase 8 x 70 mm bolt	2	8	24 (2.4, 18)	
Crankcase 8 x 100 mm bolt	1	8	24 (2.4, 18)	
Crankcase 6 mm bolt	8	6	14 (1.4, 10)	

CRANKSHAFT/PISTON/CYLINDER

ITEM	Q'TY	THREAD DIA. (mm)	TORQUE N·m (kgf·m, lbf·ft)	REMARKS
Crankpin bearing cap bolt	4	6	10 (1.0, 7) + 90°	See page 14-5 See page 14-10 Replace with a new one. Apply engine oil to the threads and seating surface.
Crankcase main journal bolt (retightening)	6	9	20 (2.0, 15) + 120°	See page 14-6 Apply engine oil to the threads and seating surface.

ENGINE REMOVAL/INSTALLATION

ITEM	Q'TY	THREAD DIA. (mm)	TORQUE N·m (kgf·m, lbf·ft)	REMARKS
Rear lower engine hanger nut	1	12	59 (6.0, 44)	
Front lower engine hanger bolt	2	12	54 (5.5, 40)	
Front upper engine hanger bolt	2	12	54 (5.5, 40)	
Rear upper engine hanger nut	1	12	54 (5.5, 40)	
Drive sprocket bolt	1	10	54 (5.5, 40)	
Starter motor terminal nut/washer	1	6	10 (1.0, 7)	

FRONT WHEEL/SUSPENSION/STEERING

ITEM	Q'TY	THREAD DIA. (mm)	TORQUE N·m (kgf·m, lbf·ft)	REMARKS
Handlebar switch housing screw	4	5	2.5 (0.3, 1.8)	
Master cylinder holder bolt	4	6	12 (1.2, 9)	
Handlebar weight bolt	2	6	10 (1.0, 7)	ALOC bolt; replace with a new one.
Handlebar nut	2	12	54 (5.5, 40)	
Front brake disc bolt	10	6	20 (2.0, 15)	ALOC bolt; replace with a new one.
Pulser ring torx bolt	5	5	7.0 (0.7, 5.2)	ALOC bolt; replace with a new one.
Tire valve nut	2	8V1	6.5 (0.7, 4.8)	
Front axle bolt	1	18	74 (7.5, 55)	Apply engine oil to the axle threads.
Front axle pinch bolt	1	8	22 (2.2, 16)	
Fork piston lock nut	1	9	18 (1.8, 13)	
Fork rod lock nut	1	9	18 (1.8, 13)	
Bottom bridge pinch bolt	4	8	27 (2.8, 20)	
Fork bolt	2	44	35 (3.6, 26)	
Top bridge pinch bolt	2	8	22 (2.2, 16)	
Steering stem adjusting nut	1	26	23 (2.3, 17)	See page 16-33 Apply engine oil to the threads.
Steering stem adjusting lock nut	1	26	–	See page 16-33
Steering stem nut	1	24	103 (10.5, 76)	See page 16-33

REAR WHEEL/SUSPENSION

ITEM	Q'TY	THREAD DIA. (mm)	TORQUE N·m (kgf·m, lbf·ft)	REMARKS
Rear brake disc bolt	4	8	42 (4.3, 31)	ALOC bolt; replace with new ones.
Driven sprocket nut	5	12	108 (11.0, 80)	Self-lock nut
Rear axle nut	1	18	98 (10.0, 72)	Self-lock nut
Shock absorber mounting nut	2	10	44 (4.5, 32)	Self-lock nut
Shock arm nut	1	10	44 (4.5, 32)	Self-lock nut
Shock link plate nut	2	10	44 (4.5, 32)	Self-lock nut
Drive chain slider screw	2	5	4.1 (0.4, 3)	Apply locking agent to the threads.
Parking brake cable guide screw	2	5	1.3 (0.1, 1.0)	
Swingarm pivot nut	1	18	98 (10.0, 72)	Self-lock nut

HYDRAULIC BRAKE

ITEM	Q'TY	THREAD DIA. (mm)	TORQUE N·m (kgf·m, lbf·ft)	REMARKS
Brake caliper bleed valve	3	8	5.4 (0.6, 4.0)	
Master cylinder reservoir cover screw	4	4	1.5 (0.2, 1.1)	
Front brake caliper mounting bolt	4	10	45 (4.6, 33)	ALOC bolt; replace with a new one.
Rear brake caliper mounting bolt	1	8	22 (2.2, 16)	ALOC bolt; replace with a new one.
Rear brake pad pin	1	10	17 (1.7, 13)	
Parking brake caliper mounting bolt	2	8	31 (3.2, 23)	ALOC bolt; replace with a new one.
Parking brake pad pin	2	8	17 (1.7, 13)	ALOC bolt; replace with a new one.
Master cylinder holder bolt	4	6	12 (1.2, 9)	
Brake hose oil bolt	5	10	34 (3.5, 25)	
Brake lever pivot bolt	2	6	1.0 (0.1, 0.7)	Apply 0.10 g (0.004 oz) silicone grease to the sliding surface.
Brake lever pivot nut	2	6	5.9 (0.6, 4.4)	
Front brake light switch screw	1	4	1.2 (0.1, 0.9)	
Rear brake light switch screw	2	4	1.2 (0.1, 0.9)	
Front brake caliper assembly torx bolt	6	12	27 (2.8, 20)	Apply locking agent to the threads.
Rear brake caliper pin	1	12	27 (2.8, 20)	Apply 0.4 g (0.01 oz) silicone grease to the sliding surface.
Parking brake adjuster bolt lock nut	1	8	17 (1.7, 13)	
Parking brake caliper pin bolt	1	8	22 (2.2, 16)	ALOC bolt; replace with a new one.
Parking brake lever cover screw	2	5	4.2 (0.4, 3.1)	
Parking brake caliper bracket pin	1	8	17 (1.7, 13)	

ANTI-LOCK BRAKE SYSTEM (ABS)

ITEM	Q'TY	THREAD DIA. (mm)	TORQUE N·m (kgf·m, lbf·ft)	REMARKS
Brake pipe joint nut	10	10	14 (1.4, 10)	Apply brake fluid to the threads.

LIGHTS/METERS/SWITCHES

ITEM	Q'TY	THREAD DIA. (mm)	TORQUE N·m (kgf·m, lbf·ft)	REMARKS
EOP switch	1	PT 1/8	18 (1.8, 13)	Apply sealant to the threads.
Headlight mounting bolt/washer	4	6	11 (1.1, 8)	
Taillight mounting nut	2	5	5.0 (0.5, 3.7)	
Open air temperature sensor screw	1	4	1.0 (0.1, 0.7)	Tapping screw
License light screw	2	4	2.0 (0.2, 1.5)	Tapping screw
Parking brake switch mounting screw/washer	1	3	0.39 (0.1, 0.3)	

Honda SMART Key SYSTEM

ITEM	Q'TY	THREAD DIA. (mm)	TORQUE N·m (kgf·m, lbf·ft)	REMARKS
ESL unit mounting bolt	2	8	26 (2.7, 19)	One-way bolt; replace with a new one.
Seat/fuel lid open actuator screw	6	4	1.1 (0.1, 0.8)	
Buzzer mounting bolt	1	5	5.2 (0.5, 3.8)	

OTHERS

ITEM	Q'TY	THREAD DIA. (mm)	TORQUE N·m (kgf·m, lbf·ft)	REMARKS
Front reflector nut	2	6	1.7 (0.2, 1.3)	Self-lock nut
Lower crankcase sealing bolt (20 mm)	1	20	30 (3.1, 22)	Apply locking agent to the threads. Coating width; 6.5 ± 1.0 mm (0.26 ± 0.04 in) from tip
Lower crankcase sealing bolt (12 x 8 mm)	1	12	12 (1.2, 9)	Apply locking agent to the threads. Coating width; 5.5 ± 1.0 mm (0.22 ± 0.04 in) from tip
Cylinder head sealing bolt	2	18	32 (3.3, 24)	Apply locking agent to the threads.
Breather plate bolt	8	6	13 (1.3, 10)	Apply locking agent to the threads. Coating width: See page 1-15
Cam chain tensioner set plate bolt	1	6	12 (1.2, 9)	Apply locking agent to the threads. Coating width: See page 1-15
Shift spindle return spring pin	1	8	23 (2.3, 17)	
Pillion step bolt	4	8	10 (1.0, 7)	

Apply locking agent to the threads as shown.

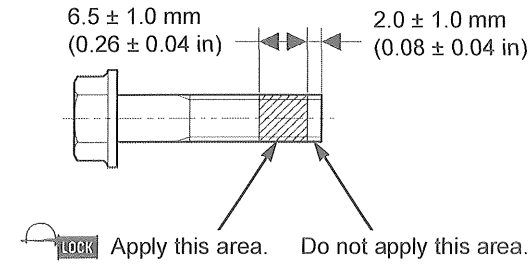

The bolt shown is typical.

LUBRICATION & SEAL POINTS

ENGINE

MATERIAL	LOCATION	REMARKS
Liquid sealant (TB1207B manufactured by Three Bond or equivalent)	Crankcase mating surface	See page 13-15
	Oil pan mating surface	See page 9-6
	Right crankcase cover mating surface	See page 11-43
	Alternator cover mating surface	See page 12-3
	Alternator wire grommet sealing surface	
	Linear solenoid valve wire grommet	
Molybdenum oil solution (a mixture of 1/2 engine oil and 1/2 molybdenum disulfide grease)	Main journal bearing sliding surface	
	Crankpin bearing sliding surface	
	Crankshaft thrust surface	
	Valve stem (valve guide sliding surface) and stem end	
	Camshaft lobes, journals and thrust surface	
	Rocker arm sliding surface	
	Rocker arm shaft outer surface	
	Primary drive gear sliding surface	
	Primary driven gear tooth, friction spring, sliding surface	
	M3, M4, C5, C6 gear (shift fork grooves)	
	Each transmission spline bushing outer surface	
	Each transmission bushing inner and outer surface	
	Shift fork guide claw and guide pin	
	Shift fork shaft outer surface	
	Starter reduction and idle gear shaft outer surface	
Engine oil	Piston pin outer surface	
	Piston and piston ring sliding surface	
	Valve stem seal	
	Oil strainer seal ring	
	Fuel injector seal ring	
	Starter one-way clutch	
	Mainshaft seal rings	
	Each gear teeth and rotating surface	
	Each bearing	
	Each O-ring (except water sealing)	
	Other rotating area and sliding surface	
Multi-purpose grease	Each oil seal lips	
UNIREX N3 manufactured by ExxonMobil or equivalent	Electric shift reduction gear teeth and journal	2 – 4 g (0.07 – 0.14 oz)

FRAME

MATERIAL	LOCATION	REMARKS
Urea based multi-purpose grease with extreme pressure (example: EXCELITE EP2 manufactured by Kyodo Yushi, Stamina EP2 manufactured by Shell or equivalent)	Steering head bearing sliding surface	3 – 5 g (0.1 – 0.2 oz)
	Steering head dust seal lips	
Multi-purpose grease	Sidestand pivot sliding surface	
	Pillion step pivot sliding surface	
	Seat catch hook sliding area	
	Centerstand pivot shaft sliding surface	
	Parking brake link gear sliding surface	
	Parking brake lever sliding surface	
	Wheel dust seal lips	
	Rear wheel hub O-ring (driven flange side)	
	Swingarm pivot ball bearing	
Molybdenum disulfide grease	Swingarm pivot dust seal lips	
	Swingarm pivot needle bearings	
	Swingarm needle bearing (shock link plate side)	
	Shock arm dust seal lips	
	Shock arm needle bearings	
	Rear shock absorber lower mount dust seal lips	
	Rear shock absorber lower mount needle bearing	
Cable lubricant	Seat lock cable outer inside	
	Fuel lid cable outer inside	
	Parking brake cable outer inside	
Silicone grease	Brake lever sliding surface and lever-to-master piston contacting area	0.10 g (0.004 oz) minimum
	Brake lever pivot bolt sliding surface	0.10 g (0.004 oz) minimum
	Brake caliper dust seals	
	Brake pad pin stopper ring	
	Rear brake caliper pin bolt sliding surface	0.4 g (0.01 oz) minimum
	Rear brake caliper sleeve sliding surface	0.4 g (0.01 oz) minimum
	Parking brake caliper bracket pin sliding surface	0.4 g (0.01 oz) minimum
	Parking brake caliper sleeve sliding surface	0.4 g (0.01 oz) minimum
	Parking brake adjuster bolt threads	
	Parking brake shaft sliding surface	
	Parking brake caliper piston sliding surface	
	Parking brake shaft boot lips	0.4 g (0.01 oz) minimum
SANKOL CFD-810Z or equivalent	Fuel lid hinge sliding surface	
DOT 4 brake fluid	Brake caliper piston and piston seals	
	Brake master piston and cups	
	Brake pipe joint nut threads	
Fork fluid	Fork dust seal and oil seal lips	
Dive chain lubricant designed specifically for O-ring chains or SAE #80-90 gear oil	Drive chain whole surface	
Honda Bond A or an equivalent	Left handlebar grip rubber inside	
	Brake pad retainer seating surface	
Engine oil	Axle sliding surface	
	Steering stem adjust nut threads	
	Fuel cap packing and fuel pump unit packing	
Lithium based multi-purpose grease NLGI #2 or equivalent	Throttle grip and APS contacting surface	See page 16-7

SPECIAL TOOL LIST

TITLE	TOOL No	TOOL NAME
MAINTENANCE	07HAA-PJ70101	Oil filter wrench
	07HMH-MR10103	Drive chain tool set
PGM-FI SYSTEM	070MZ-0010300	SCS short connector
	07ZAJ-RDJA110	Test probe
IGNITION SYSTEM	07HGJ-0020100	Peak voltage adaptor
	07ZAJ-RDJA110	Test probe
FUEL SYSTEM	07406-0040004	Fuel pressure gauge
	070MJ-K260100	Pressure gauge attachment set
	07ZAJ-S5A0130	Hose attachment, 6 mm/9 mm
	07ZAJ-S7C0100	Hose attachment, 8 mm/9 mm
	07ZAJ-S7C0200	Attachment joint, 8 mm/9 mm
	07ZAJ-S5A0150	Attachment joint, 6 mm/9 mm
LUBRICATION SYSTEM	070MJ-0010101	Oil pressure gauge attachment
	07HAA-PJ70101	Oil filter wrench
	07506-3000001	Oil pressure gauge set
	07406-0030000	Oil pressure gauge attachment
CYLINDER HEAD/VALVES	07724-0010100	Gear holder, 2.5
	07757-0010000	Valve spring compressor
	07959-KM30101	Valve spring compressor attachment
	07942-8920000	Valve guide driver 5.0 x 9.4 mm
	07743-0020000	Valve guide driver
	07984-MA60001	Valve guide reamer, 5.010 mm
	07781-0010400	Cutter holder, 5.0 mm
	07780-0010200	Seat cutter, 27.5 mm (45° IN)
	07780-0010600	Seat cutter, 24 mm (45° EX)
	07780-0012100	Flat cutter, 28 mm (32° IN)
	07780-0012000	Flat cutter, 25 mm (32° EX)
	07780-0014500	Interior cutter, 26 mm (60° IN)
	07780-0014202	Interior cutter, 22 mm (60° EX)
DUAL CLUTCH TRANSMISSION (DCT)	07ZAJ-RDJA110	Test probe
	07931-MA70000	Bearing remover, 20 mm
	07724-0010100	Gear holder, 2.5
ALTERNATOR/STARTER CLUTCH	07725-0040001	Flywheel holder
	07933-3290001	Rotor puller
CRANKCASE/TRANSMISSION/BALANCER	07949-3710001	Driver, 15 x 280L
	07746-0010300	Attachment, 42 x 47 mm
	07746-0040500	Pilot, 20 mm
CRANKSHAFT/PISTON/CYLINDER	07PAF-0010000	Piston pin tool set
	07PAF-0010400	Piston base head
	07PAF-0010300	Piston pin pilot
	07973-6570600	Piston base spring
	07973-6570500	Piston base
	07PAF-0010640	Pilot collar, 18 mm
	07PAF-0010500	Piston base head insert
	07PAF-0010700	Insert pin
	07PAF-0010800	Insert adjuster

TITLE	TOOL No	TOOL NAME
FRONT WHEEL/SUSPENSION/STEERING	07746-0050600	Bearing remover head, 20 mm
	07GGD-0010100	Bearing remover shaft
	07749-0010000	Driver
	07746-0010300	Attachment, 42 x 47 mm
	07746-0040500	Pilot, 20 mm
	070MA-MGP0100	Fork bolt wrench
	07KMD-KZ30100	Fork seal driver 45.2 mm
	07RMD-MW40100	Fork seal driver attachment 41.3 mm
	07916-3710101	Steering stem socket
	07953-MJ10000	Ball race remover set
	07953-MJ10100	Remover attachment
	07953-MJ10200	Remover handle
	07946-3710500	Bearing remover
	07746-0010100	Attachment, 32 x 35 mm
	07746-0030300	Attachment, 30 mm I.D.
	07746-0010400	Attachment, 52 x 55 mm
REAR WHEEL/SUSPENSION	07749-0010000	Driver
	07746-0010800	Attachment, 22 x 24 mm
	07746-0040500	Pilot, 20 mm
	07746-0050600	Bearing remover head, 20 mm
	07GGD-0010100	Bearing remover shaft
	07746-0010400	Attachment, 52 x 55 mm
	07746-0010300	Attachment, 42 x 47 mm
	07946-1870100	Attachment, 28 x 30 mm
	07936-3710300	Bearing remover set, 17 mm
	07936-3710100	Remover handle
	07741-0010201	Remover weight
	07746-0040400	Pilot, 17 mm
	07949-3710001	Driver, 15 x 280L
	07746-0041100	Pilot, 28 mm
	07ZMD-MBW0200	Attachment, 37 mm
	07746-0040700	Pilot, 30 mm
ANTI-LOCK BRAKE SYSTEM (ABS)	07ZAJ-RDJA110	Test probe
BATTERY/CHARGING SYSTEM	BM-210	Battery tester
LIGHTS/METERS/SWITCHES	07ZAJ-RDJA110	Test probe
Honda SMART Key SYSTEM	07ZAJ-RDJA110	Test probe

CABLE & HARNESS ROUTING

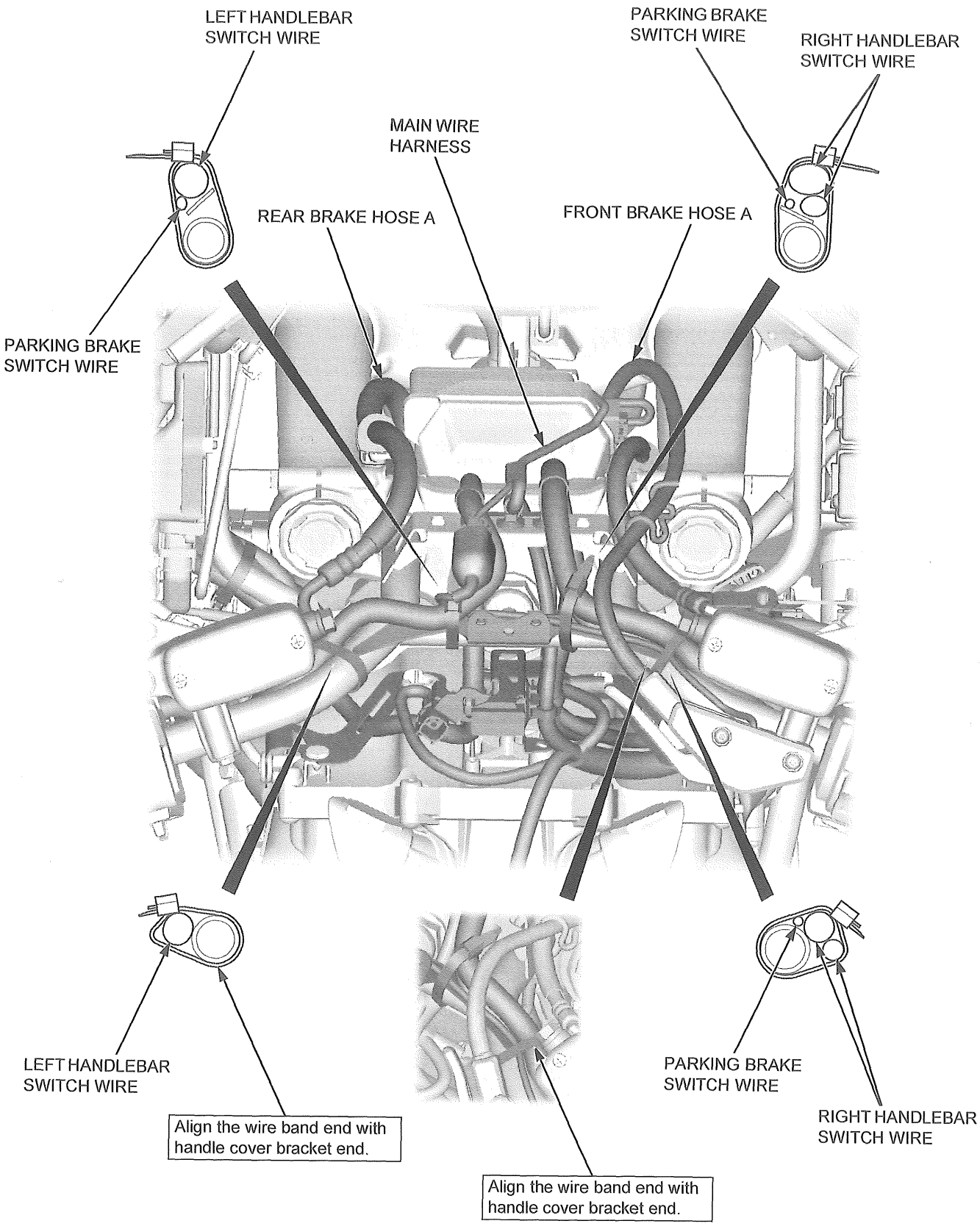

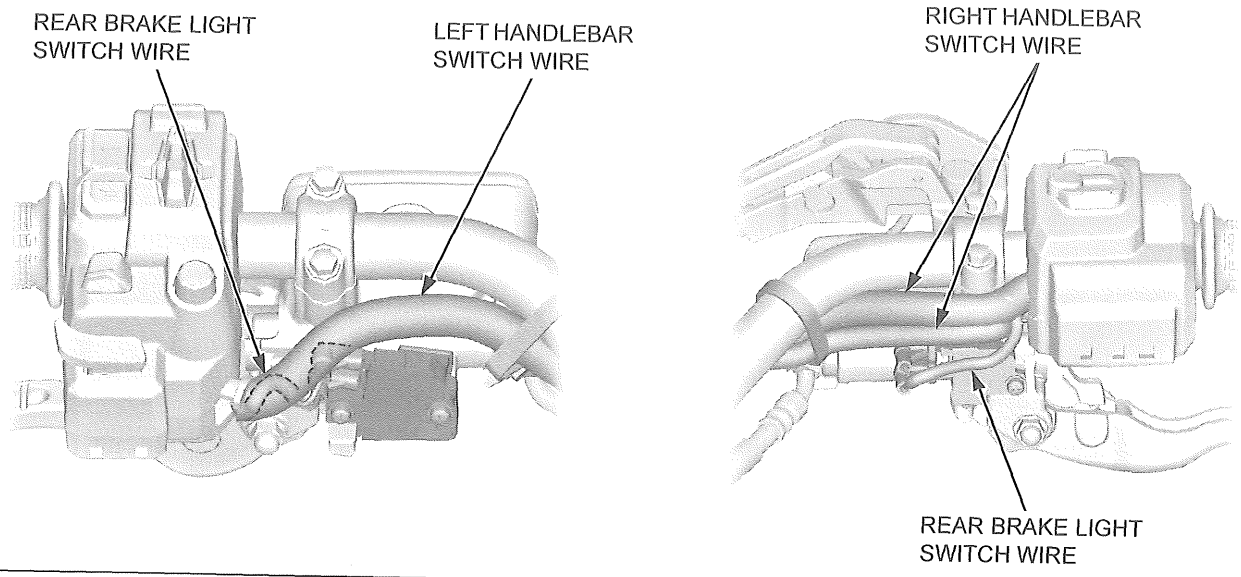
REAR BRAKE LIGHT SWITCH WIRE
LEFT HANDLEBAR SWITCH WIRE
RIGHT HANDLEBAR SWITCH WIRE
REAR BRAKE LIGHT SWITCH WIRE

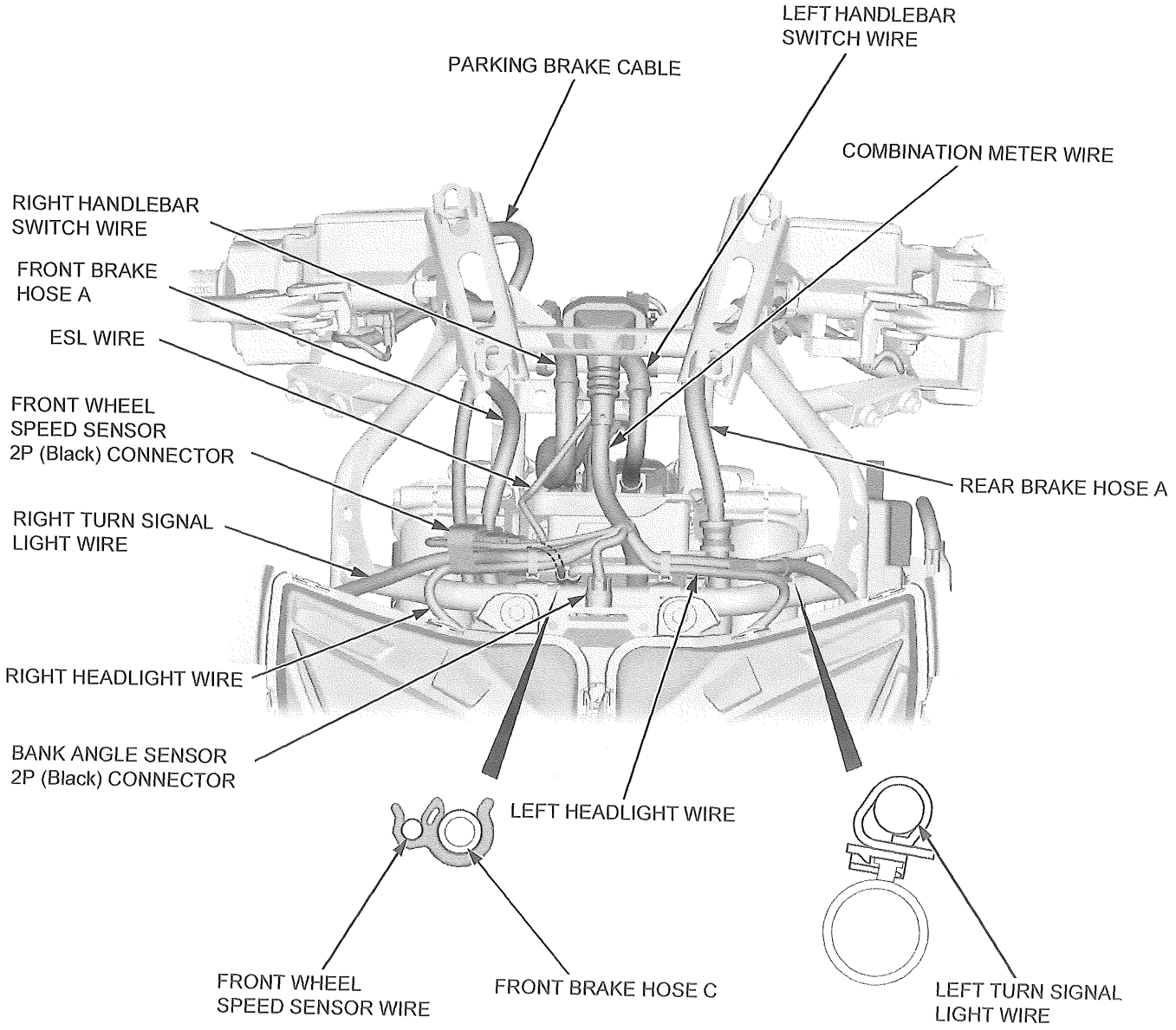
LEFT HANDLEBAR SWITCH WIRE
PARKING BRAKE CABLE
COMBINATION METER WIRE
RIGHT HANDLEBAR SWITCH WIRE
FRONT BRAKE HOSE A
ESL WIRE
FRONT WHEEL SPEED SENSOR 2P (Black) CONNECTOR
REAR BRAKE HOSE A
RIGHT TURN SIGNAL LIGHT WIRE
RIGHT HEADLIGHT WIRE
BANK ANGLE SENSOR 2P (Black) CONNECTOR
LEFT HEADLIGHT WIRE
FRONT WHEEL SPEED SENSOR WIRE
FRONT BRAKE HOSE C
LEFT TURN SIGNAL LIGHT WIRE

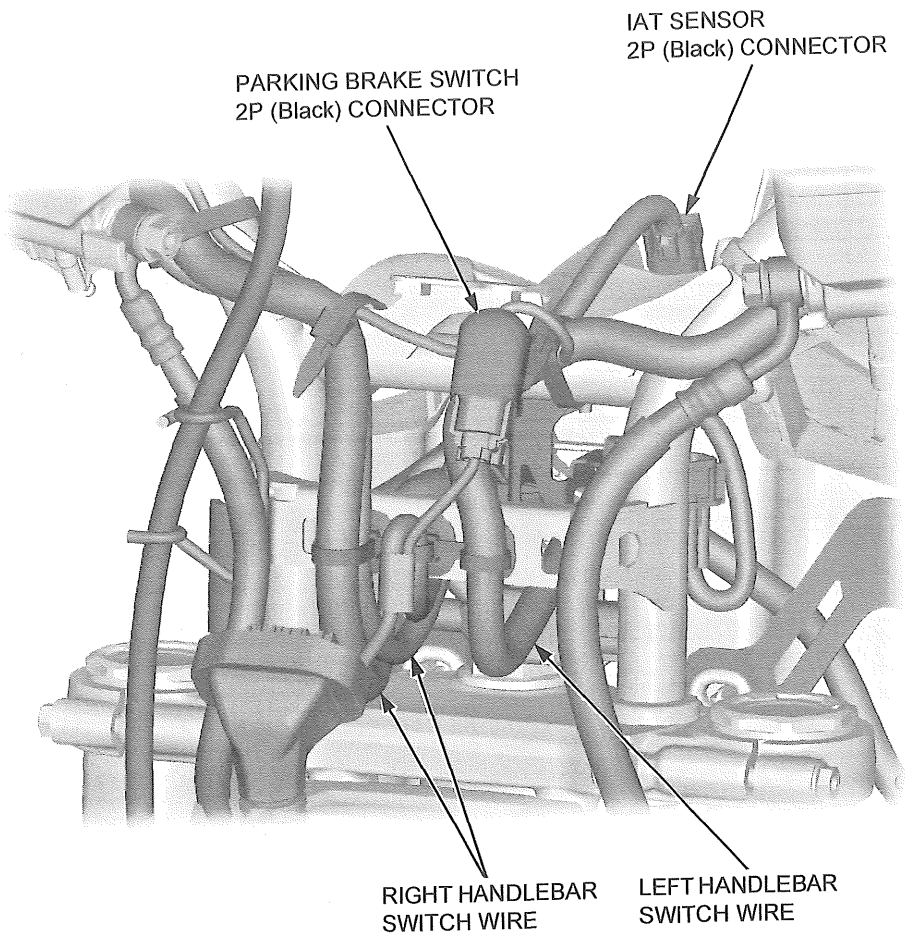
IAT SENSOR
2P (Black) CONNECTOR
PARKING BRAKE SWITCH
2P (Black) CONNECTOR
RIGHT HANDLEBAR
SWITCH WIRE
LEFT HANDLEBAR
SWITCH WIRE

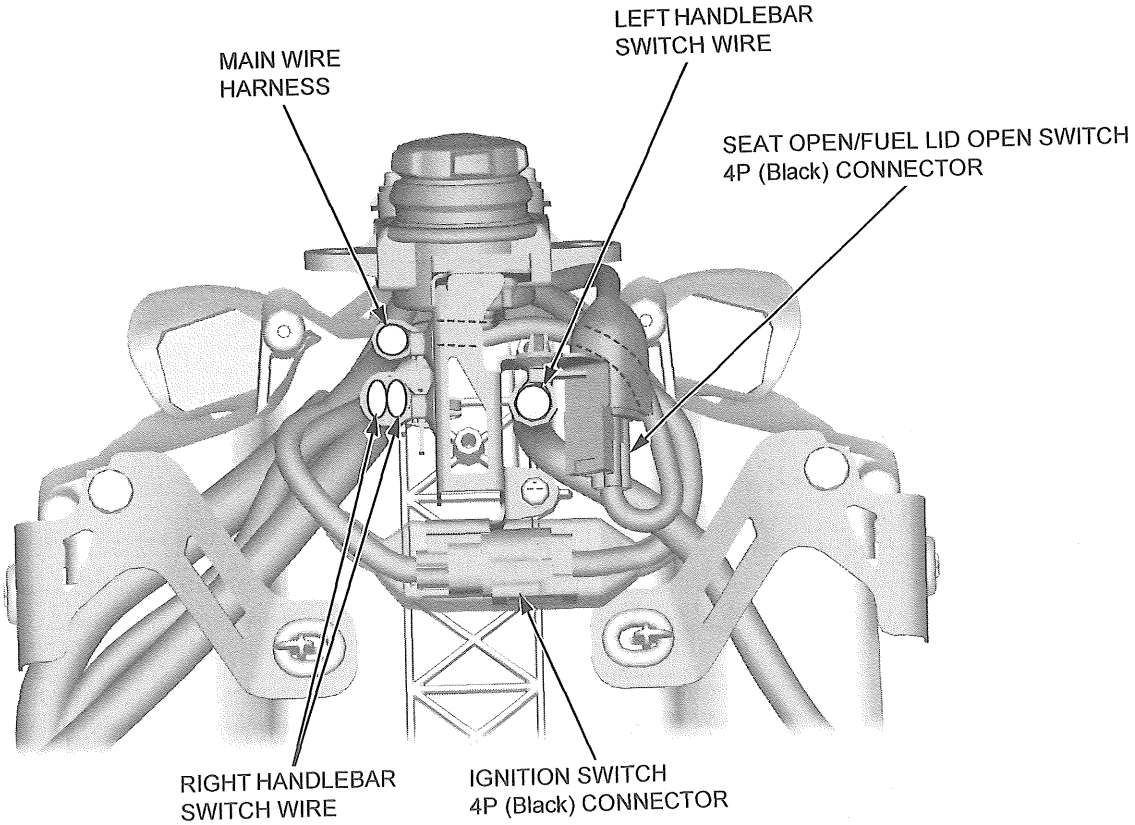
LEFT HANDLEBAR
SWITCH WIRE
MAIN WIRE
HARNESS
SEAT OPEN/FUEL LID OPEN SWITCH
4P (Black) CONNECTOR
RIGHT HANDLEBAR
SWITCH WIRE
IGNITION SWITCH
4P (Black) CONNECTOR

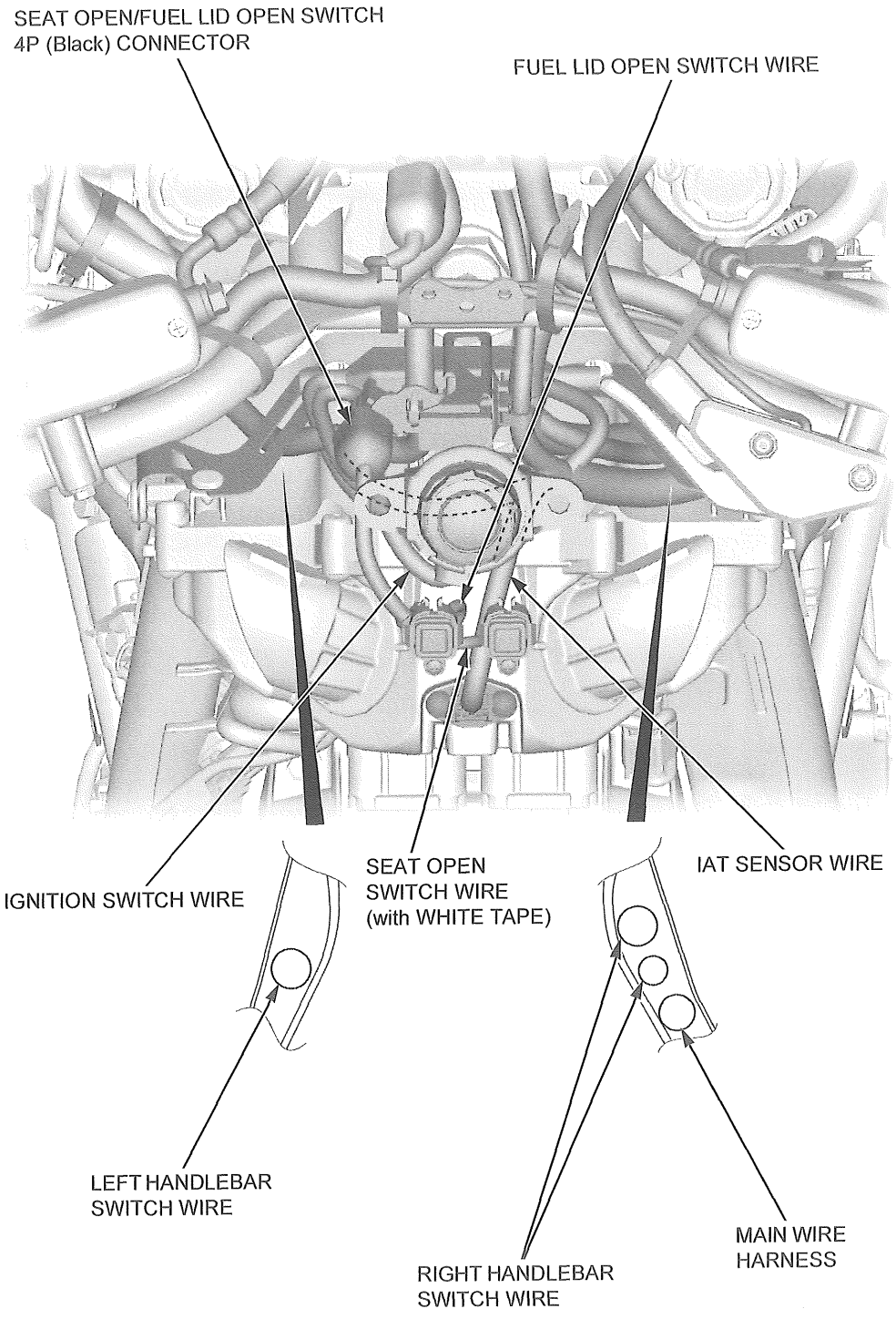
SEAT OPEN/FUEL LID OPEN SWITCH
4P (Black) CONNECTOR
FUEL LID OPEN SWITCH WIRE
IGNITION SWITCH WIRE
SEAT OPEN
SWITCH WIRE
(with WHITE TAPE)
IAT SENSOR WIRE
LEFT HANDLEBAR
SWITCH WIRE
RIGHT HANDLEBAR
SWITCH WIRE
MAIN WIRE
HARNESS

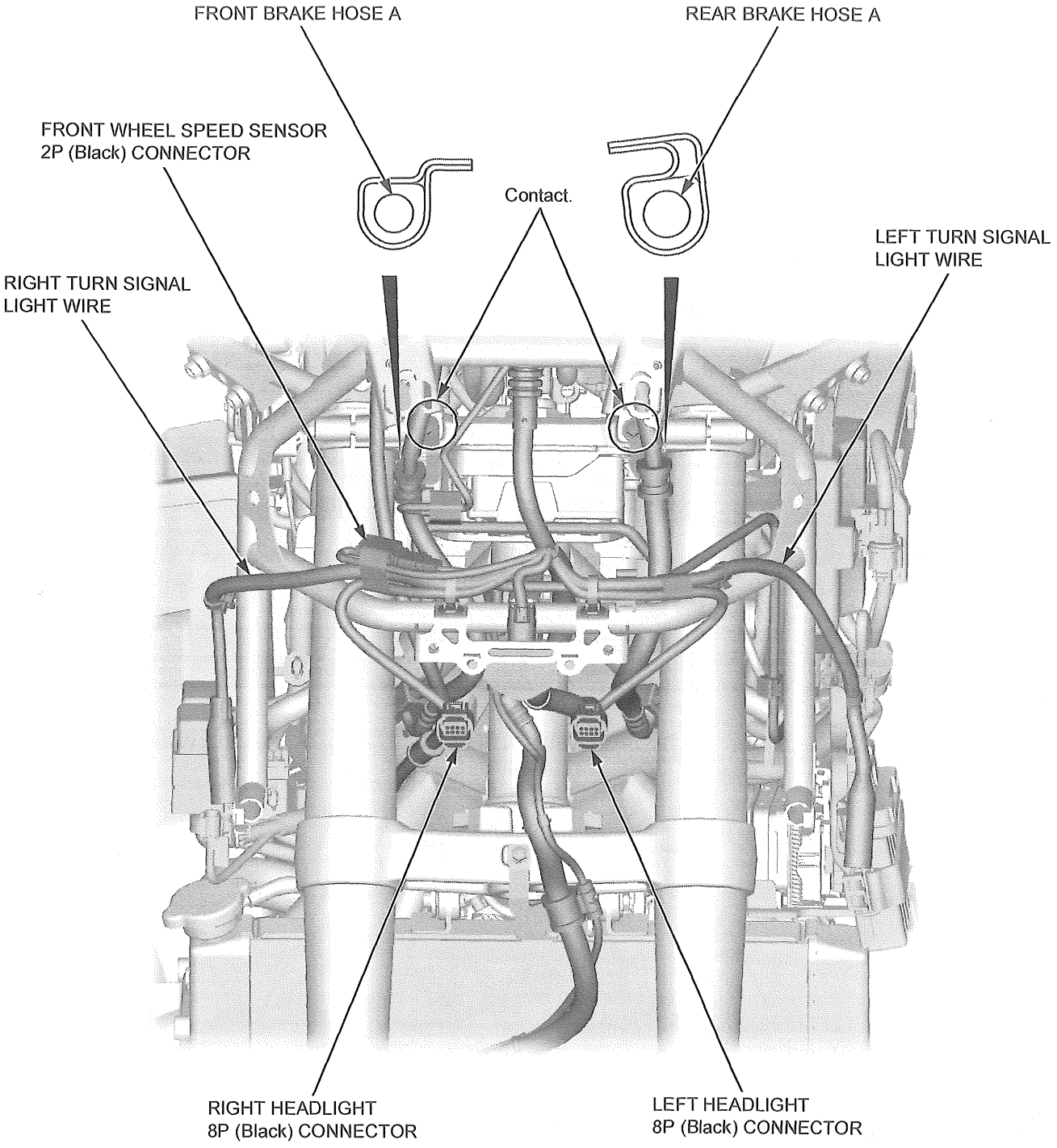
FRONT BRAKE HOSE A
REAR BRAKE HOSE A
FRONT WHEEL SPEED SENSOR
2P (Black) CONNECTOR
Contact.
LEFT TURN SIGNAL
LIGHT WIRE
RIGHT TURN SIGNAL
LIGHT WIRE
RIGHT HEADLIGHT
8P (Black) CONNECTOR
LEFT HEADLIGHT
8P (Black) CONNECTOR

Do not twist the main wire harness and right handlebar switch wire more than 360° when assembling the harness.

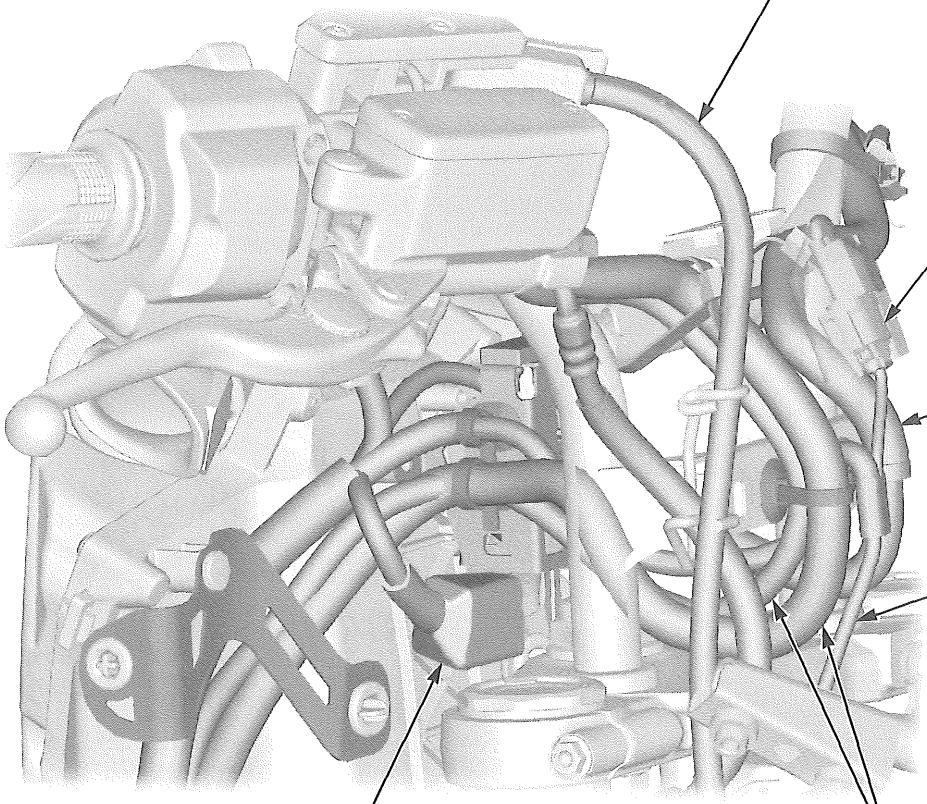

Do not twist the main wire harness and right handlebar switch wire more than 360° when assembling the harness.

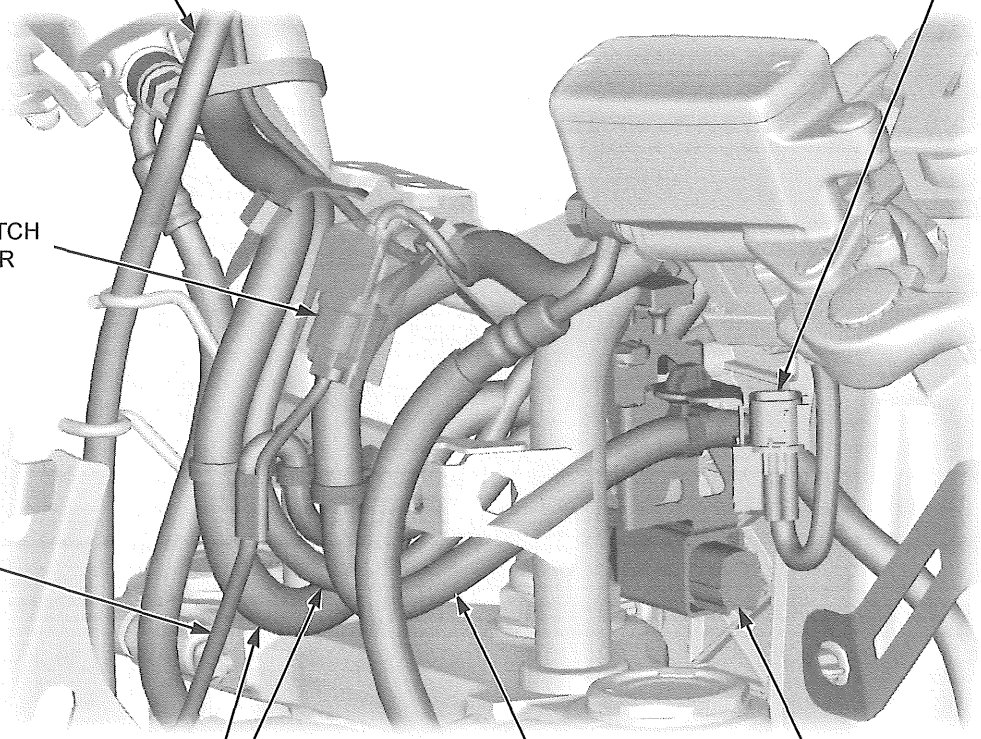

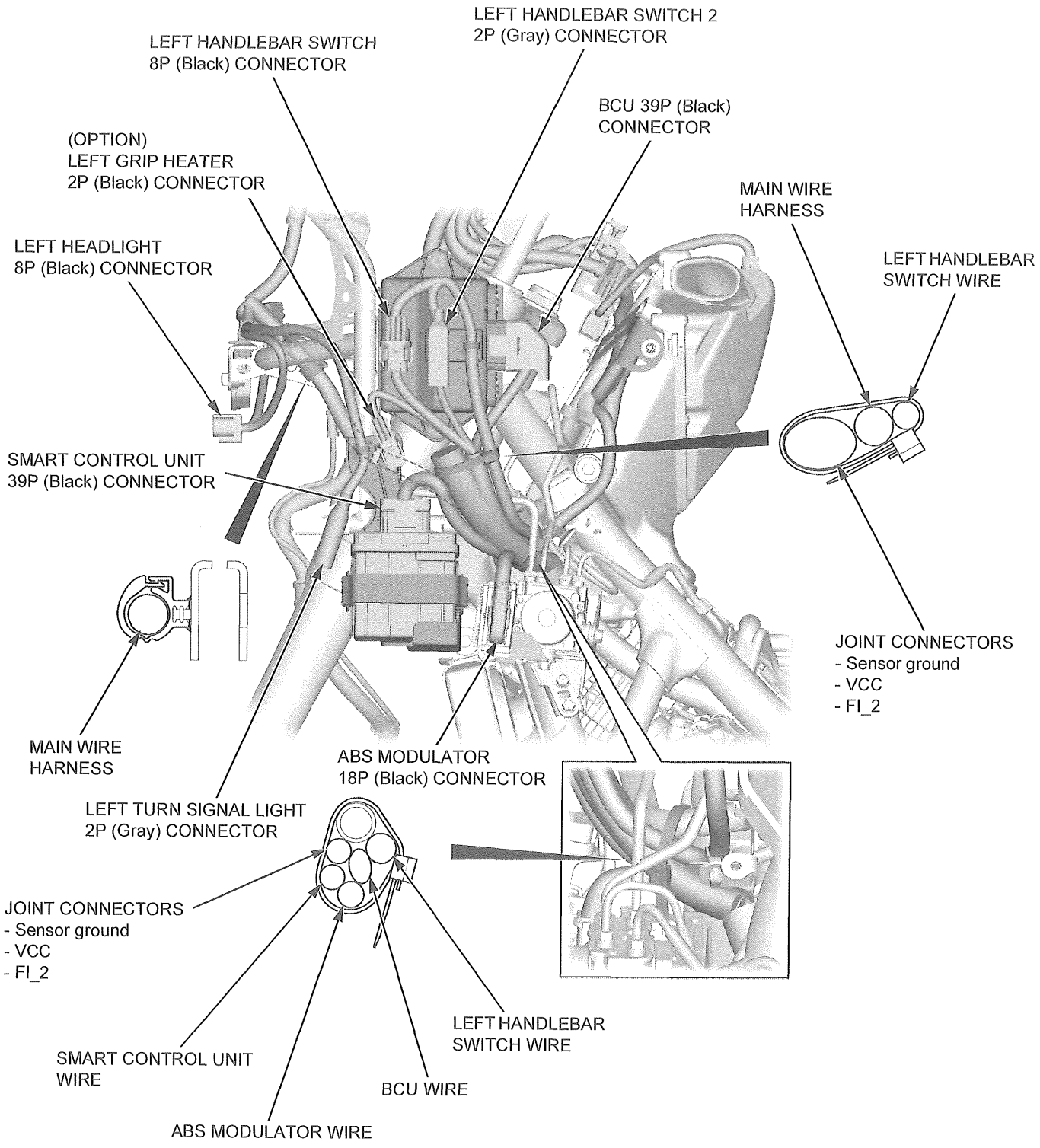
LEFT HANDLEBAR SWITCH 2
2P (Gray) CONNECTOR
LEFT HANDLEBAR SWITCH
8P (Black) CONNECTOR
BCU 39P (Black)
CONNECTOR
(OPTION)
LEFT GRIP HEATER
2P (Black) CONNECTOR
MAIN WIRE
HARNESS
LEFT HEADLIGHT
8P (Black) CONNECTOR
LEFT HANDLEBAR
SWITCH WIRE
SMART CONTROL UNIT
39P (Black) CONNECTOR
JOINT CONNECTORS
- Sensor ground
- VCC
- FI_2
MAIN WIRE
HARNESS
ABS MODULATOR
18P (Black) CONNECTOR
LEFT TURN SIGNAL LIGHT
2P (Gray) CONNECTOR
JOINT CONNECTORS
- Sensor ground
- VCC
- FI_2
LEFT HANDLEBAR
SWITCH WIRE
SMART CONTROL UNIT
WIRE
BCU WIRE
ABS MODULATOR WIRE

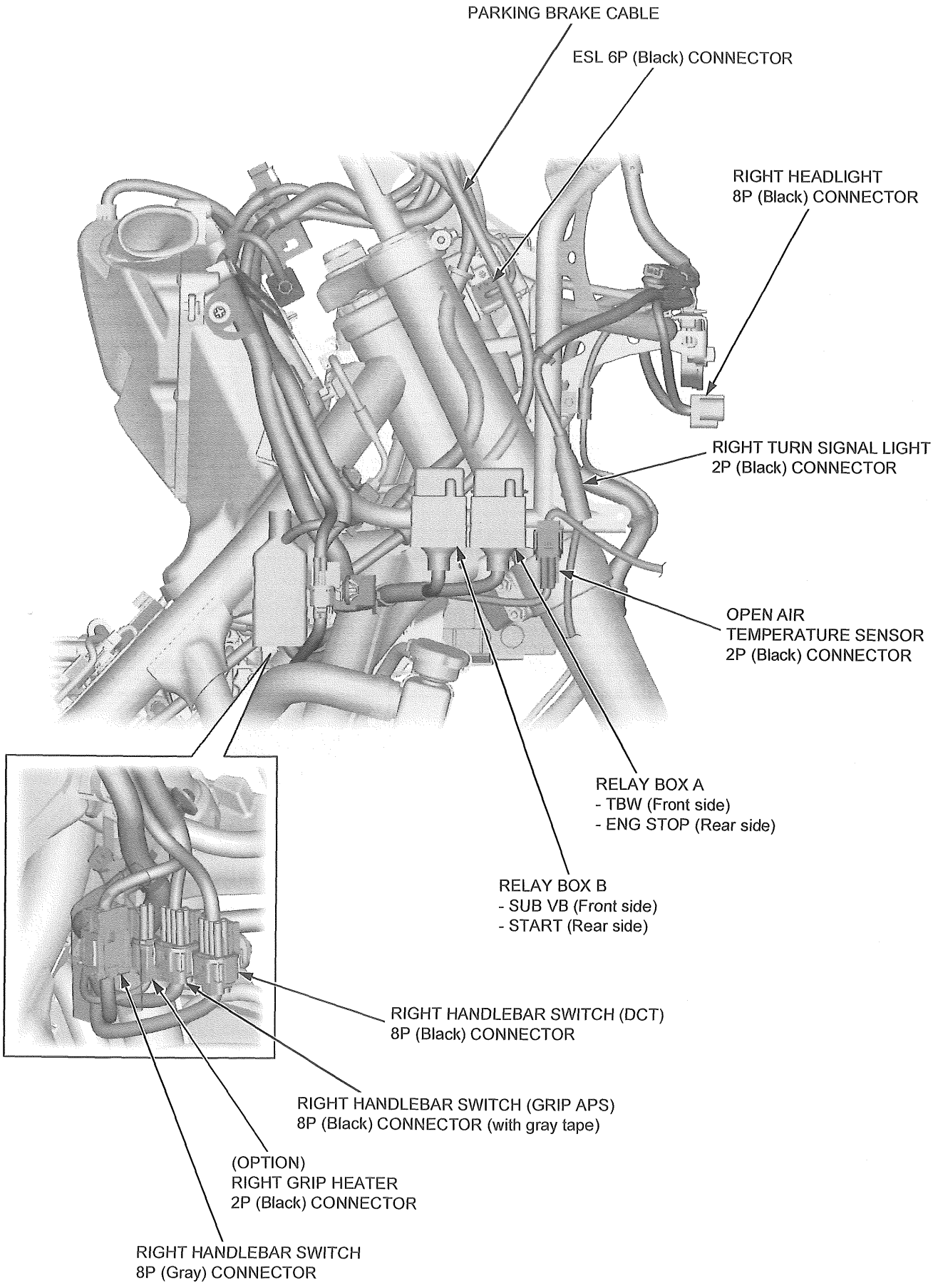
PARKING BRAKE CABLE
ESL 6P (Black) CONNECTOR
RIGHT HEADLIGHT
8P (Black) CONNECTOR
RIGHT TURN SIGNAL LIGHT
2P (Black) CONNECTOR
OPEN AIR
TEMPERATURE SENSOR
2P (Black) CONNECTOR
RELAY BOX A
- TBW (Front side)
- ENG STOP (Rear side)
RELAY BOX B
- SUB VB (Front side)
- START (Rear side)
RIGHT HANDLEBAR SWITCH (DCT)
8P (Black) CONNECTOR
RIGHT HANDLEBAR SWITCH (GRIP APS)
8P (Black) CONNECTOR (with gray tape)
(OPTION)
RIGHT GRIP HEATER
2P (Black) CONNECTOR
RIGHT HANDLEBAR SWITCH
8P (Gray) CONNECTOR

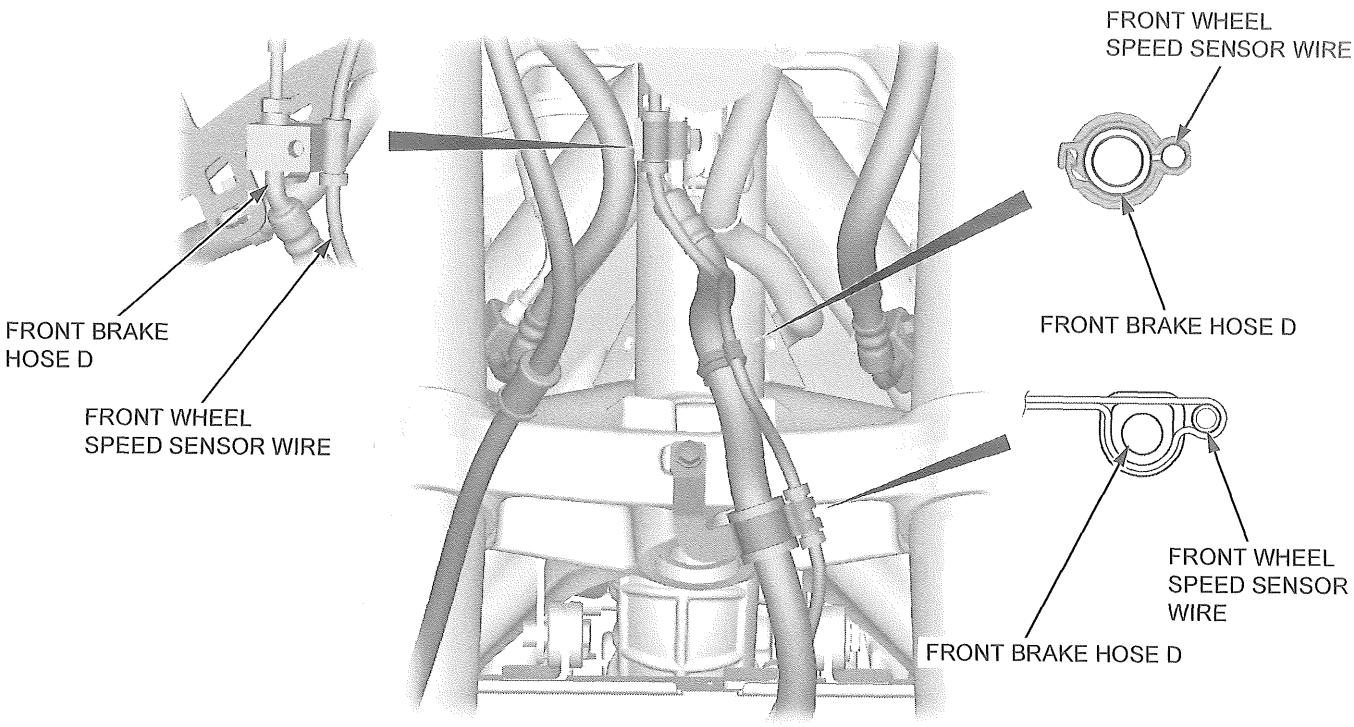
FRONT WHEEL
SPEED SENSOR WIRE
FRONT BRAKE HOSE D
FRONT BRAKE
HOSE D
FRONT WHEEL
SPEED SENSOR WIRE
FRONT WHEEL
SPEED SENSOR
WIRE
FRONT BRAKE HOSE D

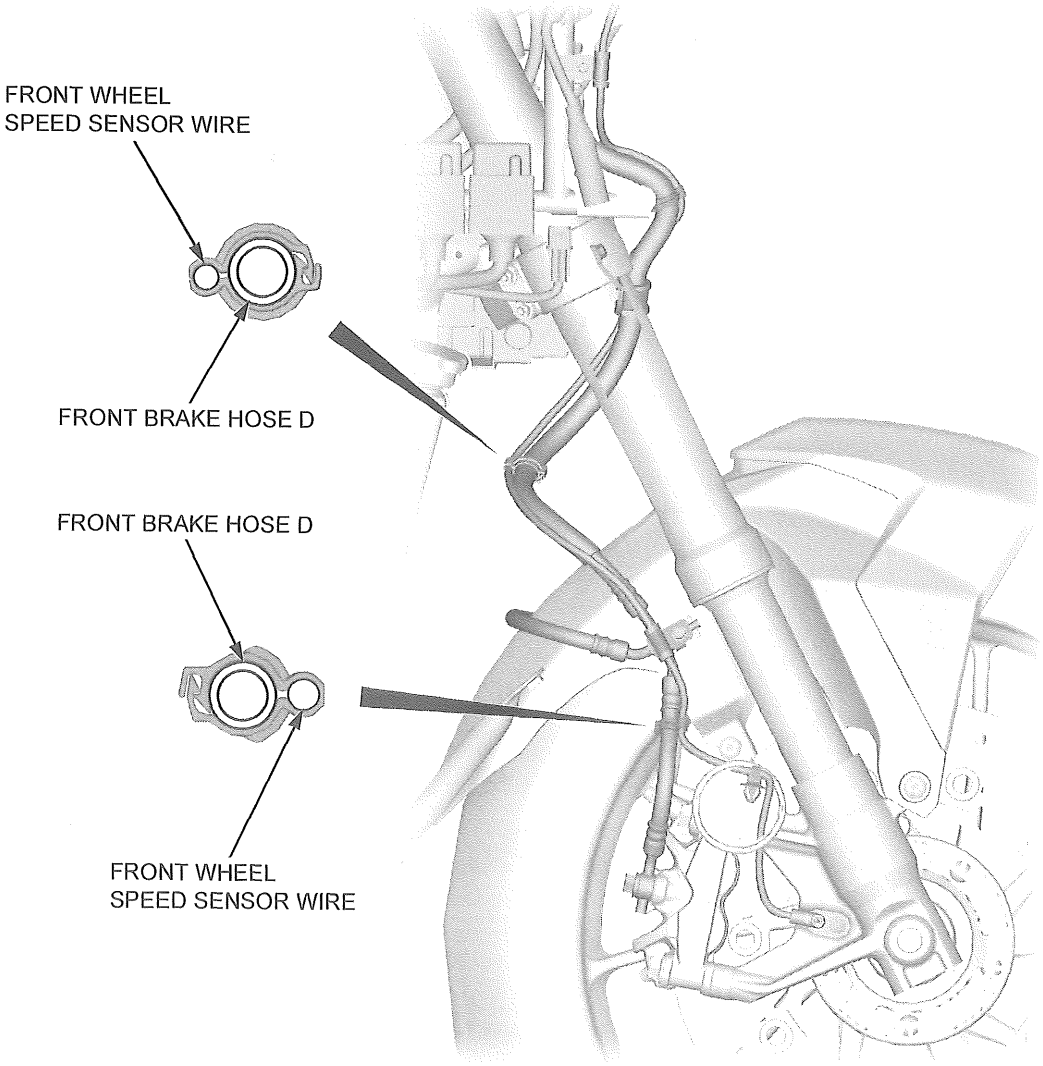
FRONT WHEEL
SPEED SENSOR WIRE
FRONT BRAKE HOSE D
FRONT BRAKE HOSE D
FRONT WHEEL
SPEED SENSOR WIRE

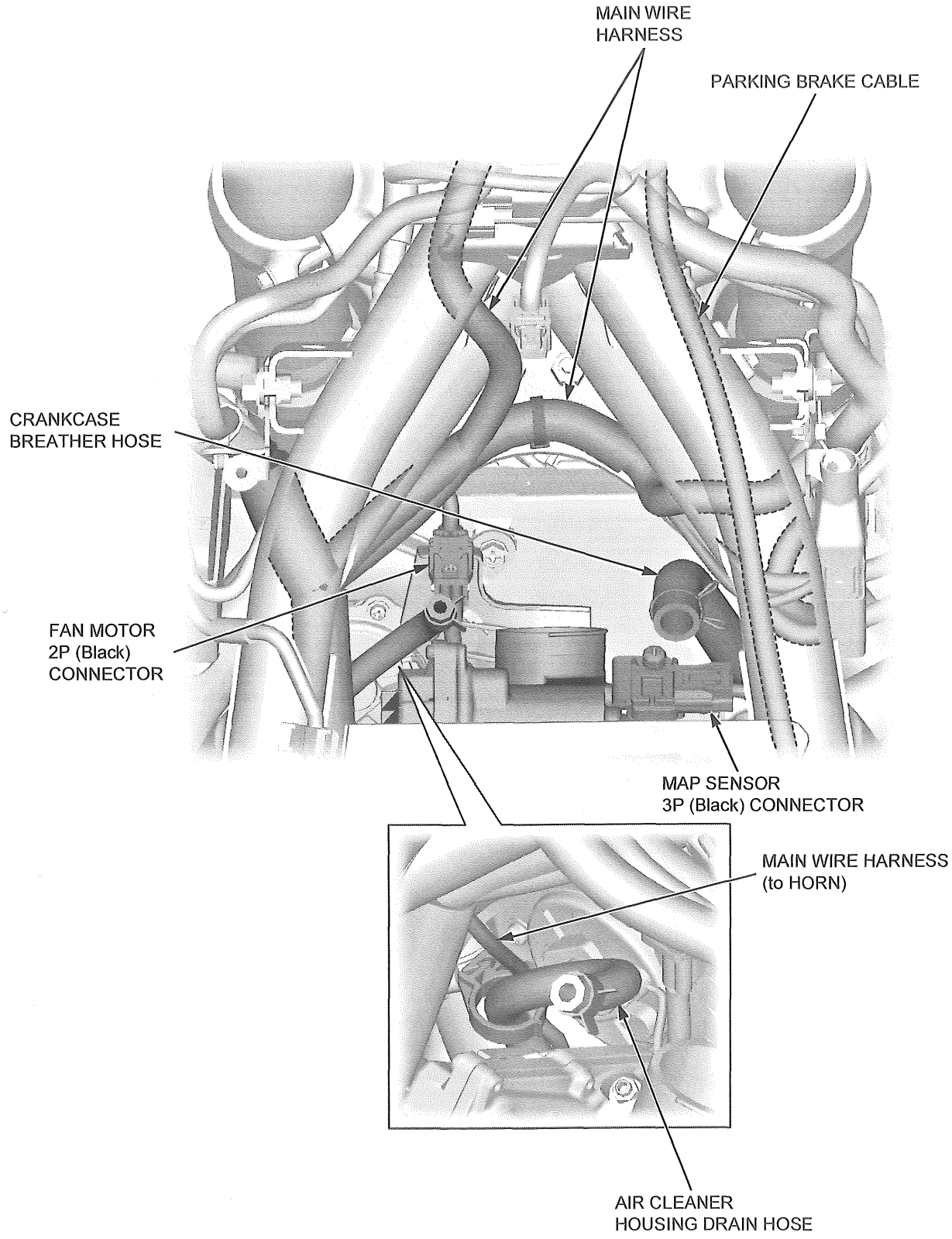
MAIN WIRE HARNESS
PARKING BRAKE CABLE
CRANKCASE BREATHER HOSE
FAN MOTOR 2P (Black) CONNECTOR
MAP SENSOR 3P (Black) CONNECTOR
MAIN WIRE HARNESS (to HORN)
AIR CLEANER HOUSING DRAIN HOSE

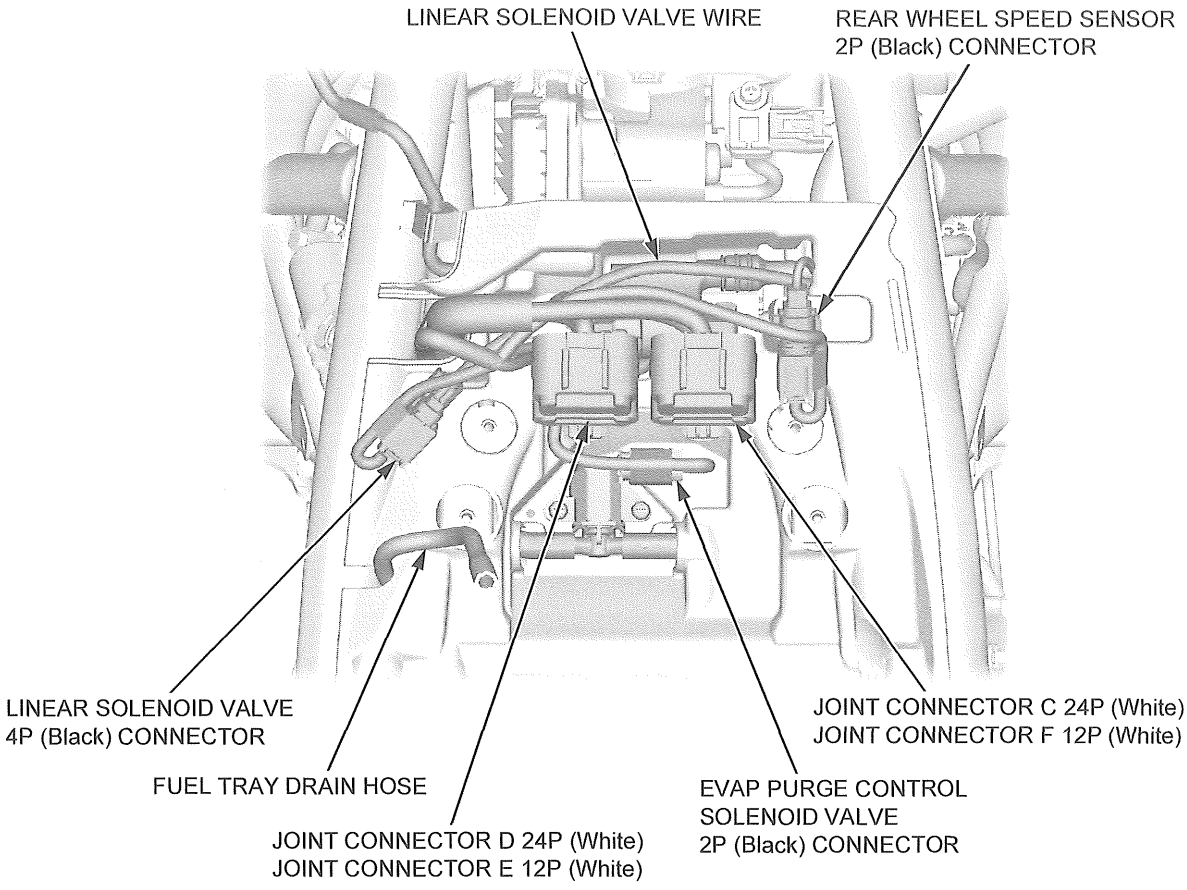
LINEAR SOLENOID VALVE WIRE
REAR WHEEL SPEED SENSOR
2P (Black) CONNECTOR
LINEAR SOLENOID VALVE
4P (Black) CONNECTOR
FUEL TRAY DRAIN HOSE
JOINT CONNECTOR D 24P (White)
JOINT CONNECTOR E 12P (White)
EVAP PURGE CONTROL
SOLENOID VALVE
2P (Black) CONNECTOR
JOINT CONNECTOR C 24P (White)
JOINT CONNECTOR F 12P (White)

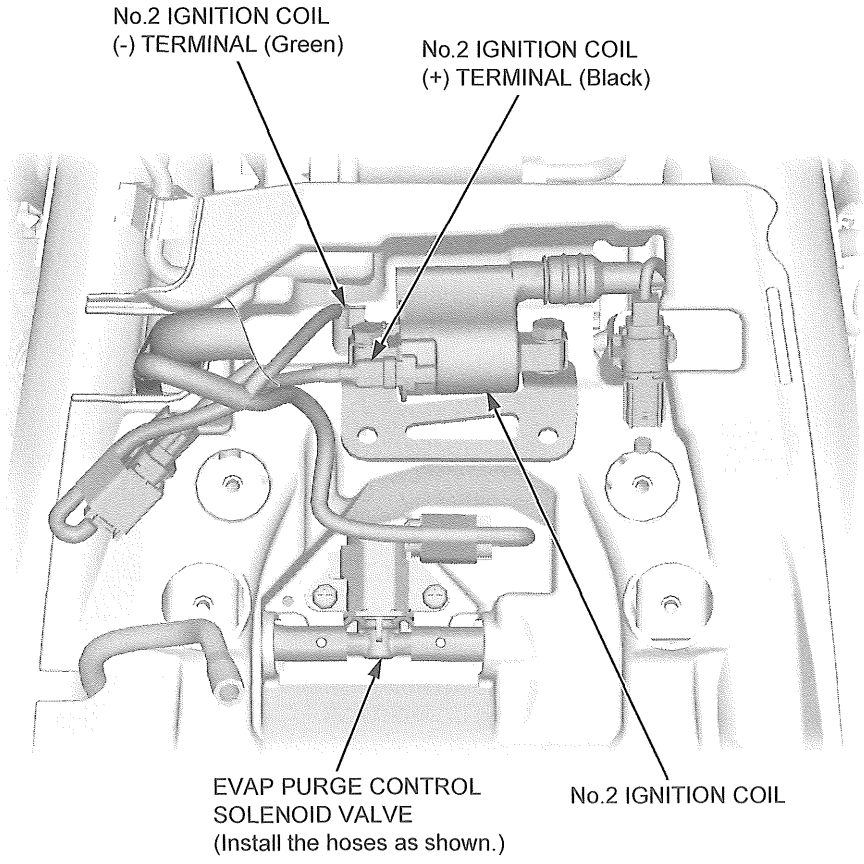
No.2 IGNITION COIL
(-) TERMINAL (Green)
No.2 IGNITION COIL
(+) TERMINAL (Black)
EVAP PURGE CONTROL
SOLENOID VALVE
(Install the hoses as shown.)
No.2 IGNITION COIL

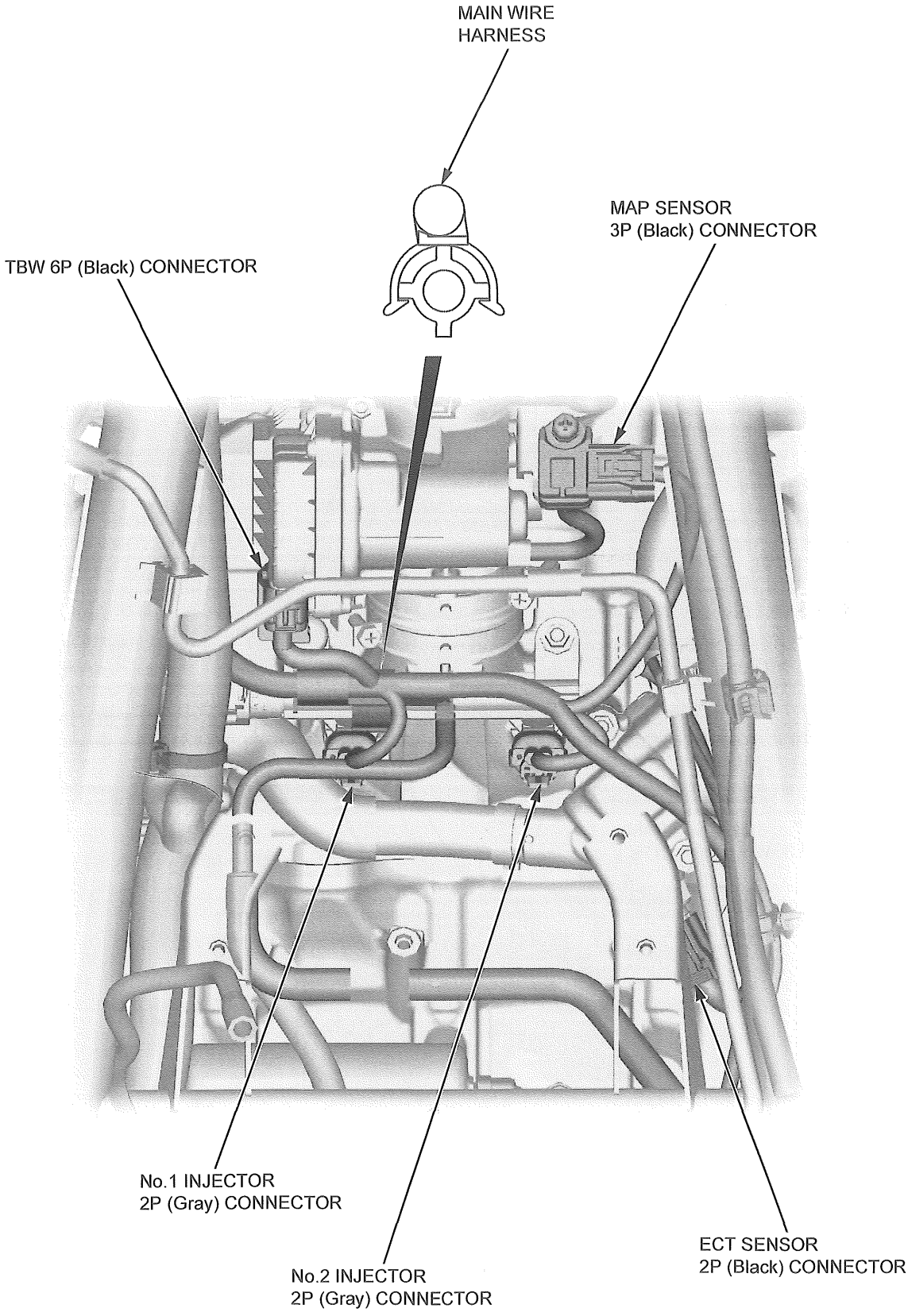
MAIN WIRE HARNESS
MAP SENSOR 3P (Black) CONNECTOR
TBW 6P (Black) CONNECTOR
No.1 INJECTOR 2P (Gray) CONNECTOR
No.2 INJECTOR 2P (Gray) CONNECTOR
ECT SENSOR 2P (Black) CONNECTOR

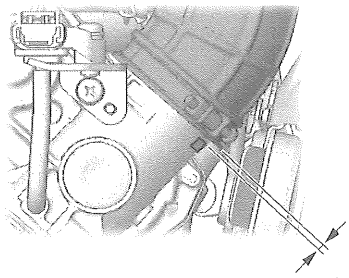

2 mm (0.08 in)

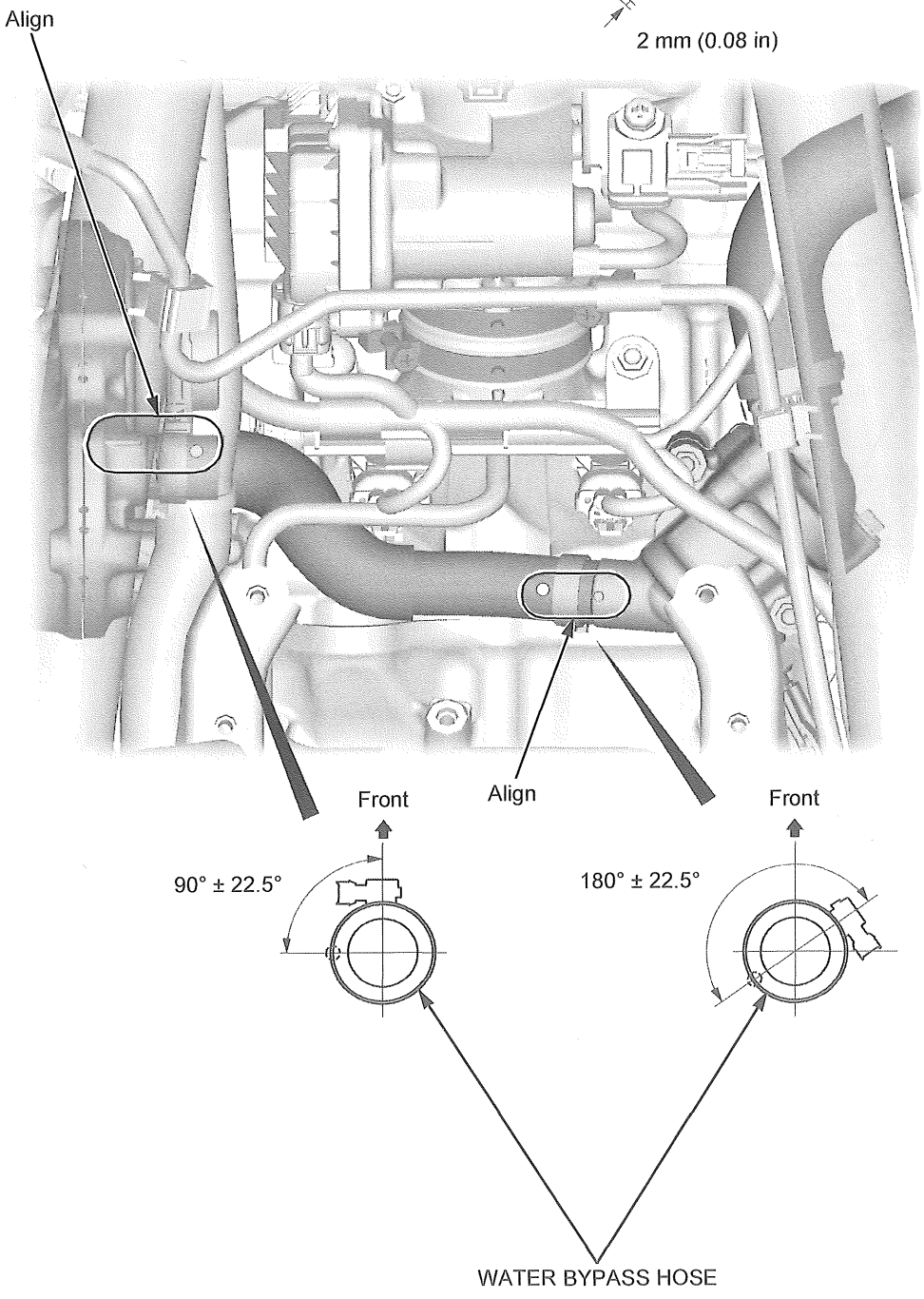

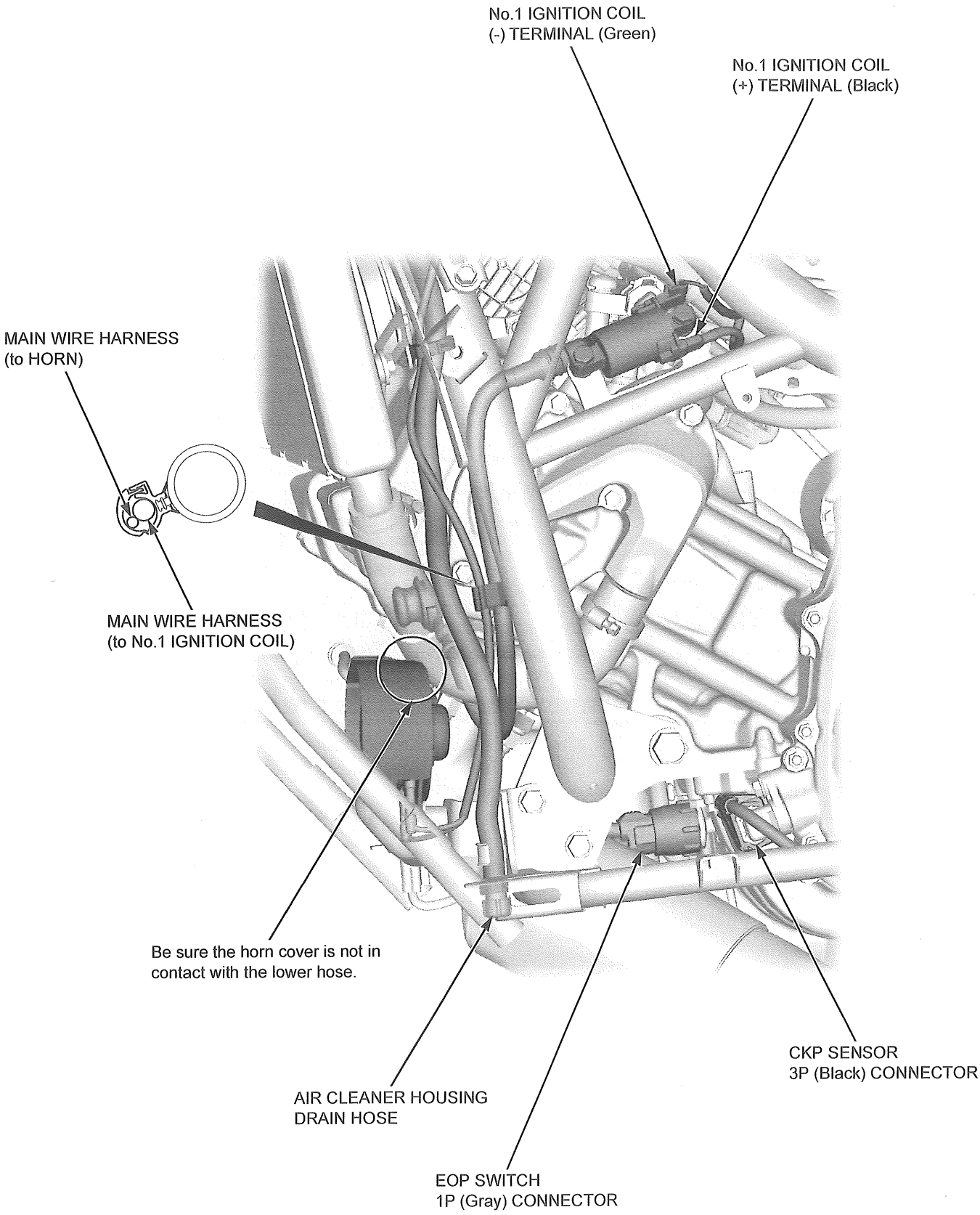
No.1 IGNITION COIL
(-) TERMINAL (Green)
No.1 IGNITION COIL
(+) TERMINAL (Black)
MAIN WIRE HARNESS
(to HORN)
MAIN WIRE HARNESS
(to No.1 IGNITION COIL)
Be sure the horn cover is not in
contact with the lower hose.
AIR CLEANER HOUSING
DRAIN HOSE
EOP SWITCH
1P (Gray) CONNECTOR
CKP SENSOR
3P (Black) CONNECTOR

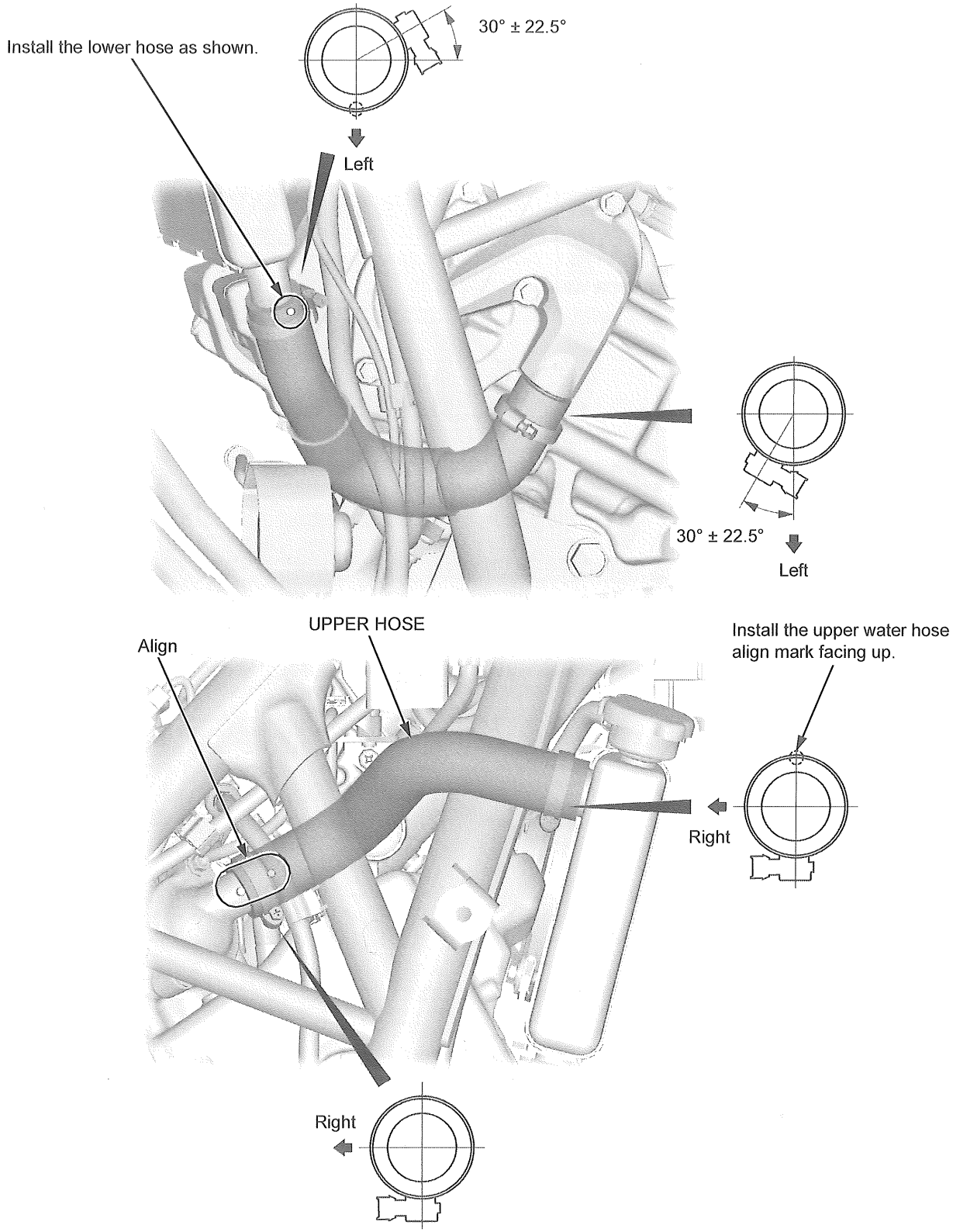
Install the lower hose as shown.
30° ± 22.5°
Left
30° ± 22.5°
Left
UPPER HOSE
Align
Install the upper water hose align mark facing up.
Right
Right

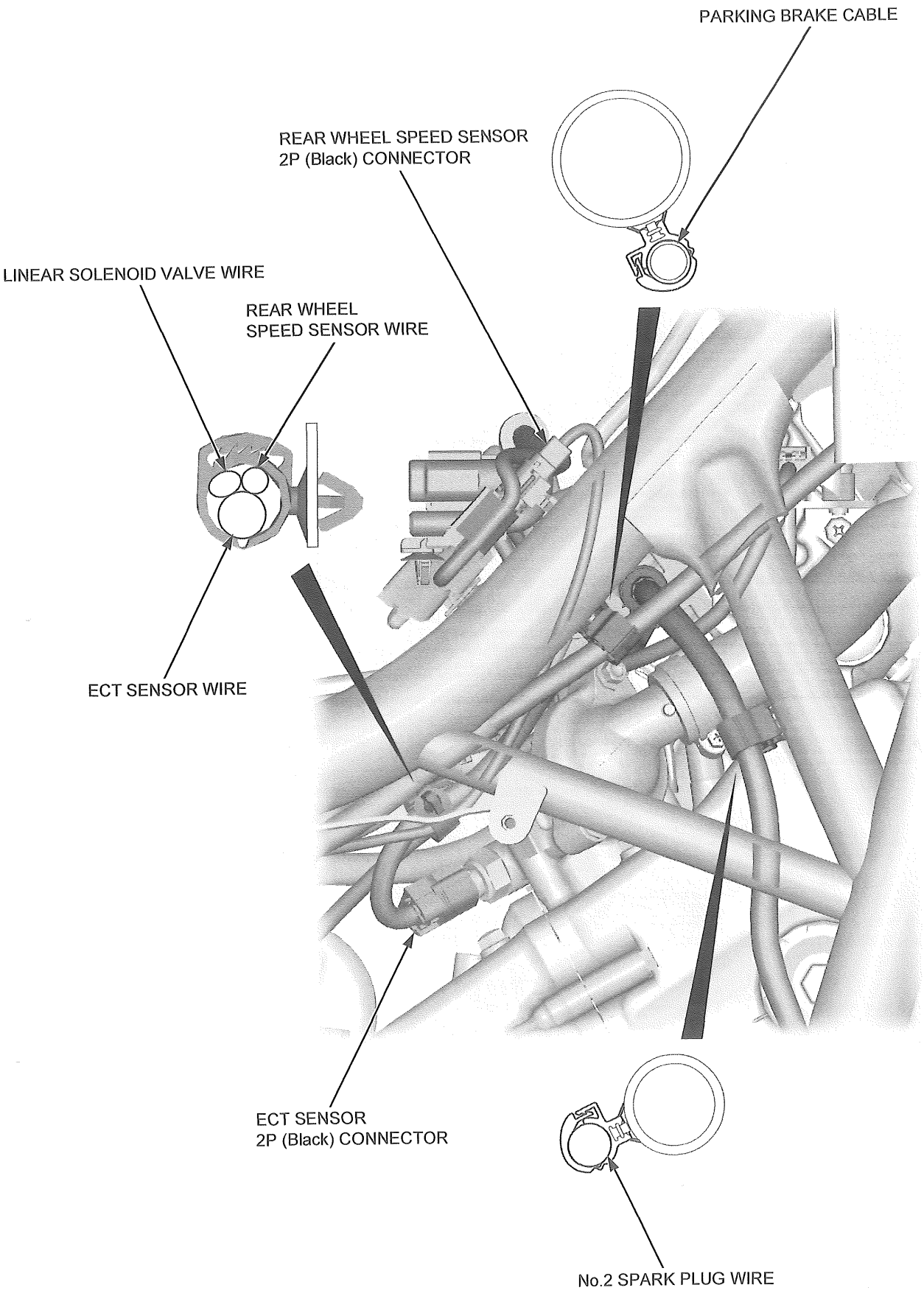
PARKING BRAKE CABLE
REAR WHEEL SPEED SENSOR
2P (Black) CONNECTOR
LINEAR SOLENOID VALVE WIRE
REAR WHEEL
SPEED SENSOR WIRE
ECT SENSOR WIRE
ECT SENSOR
2P (Black) CONNECTOR
No.2 SPARK PLUG WIRE

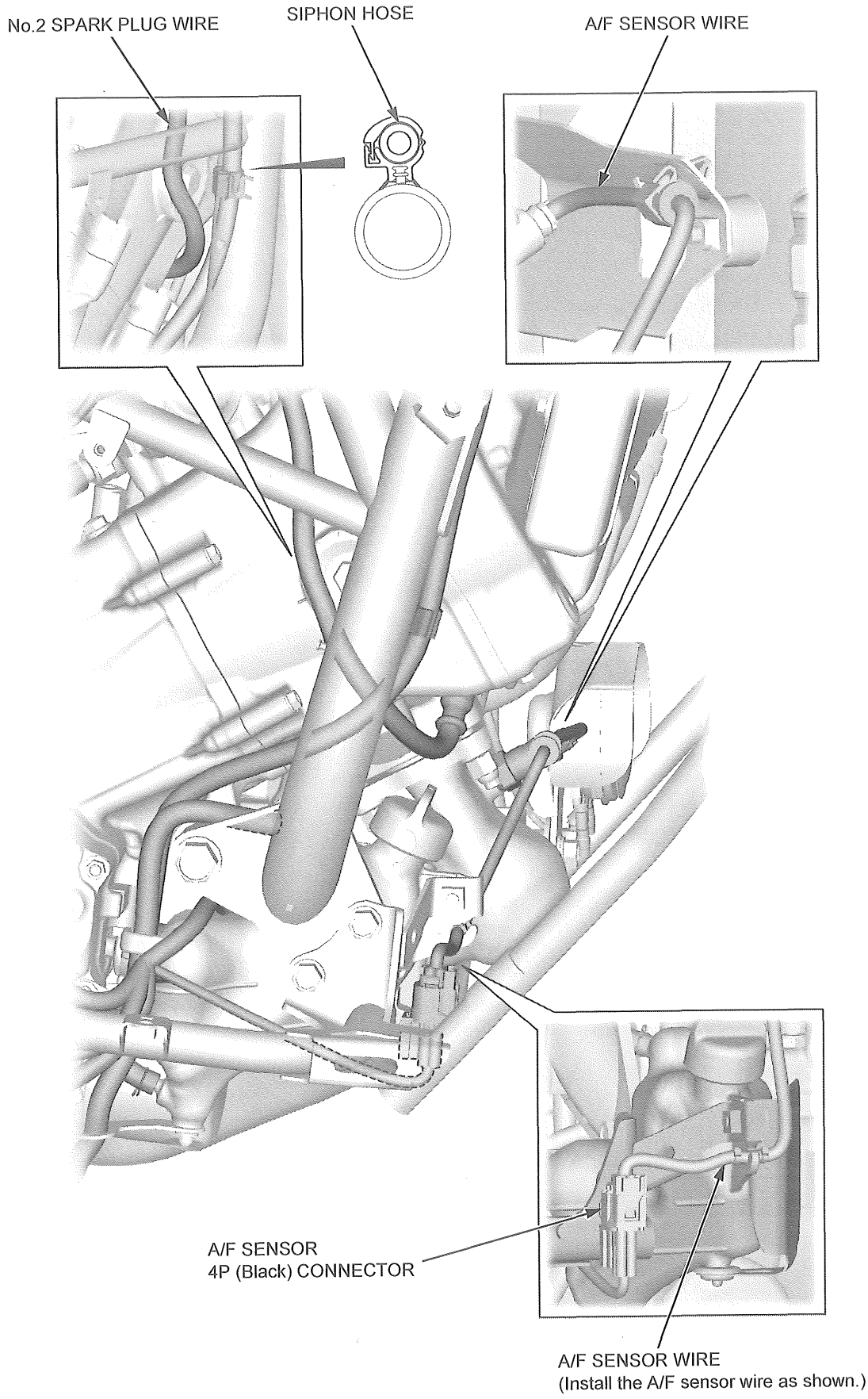
No.2 SPARK PLUG WIRE
SIPHON HOSE
A/F SENSOR WIRE
A/F SENSOR
4P (Black) CONNECTOR
A/F SENSOR WIRE
(Install the A/F sensor wire as shown.)

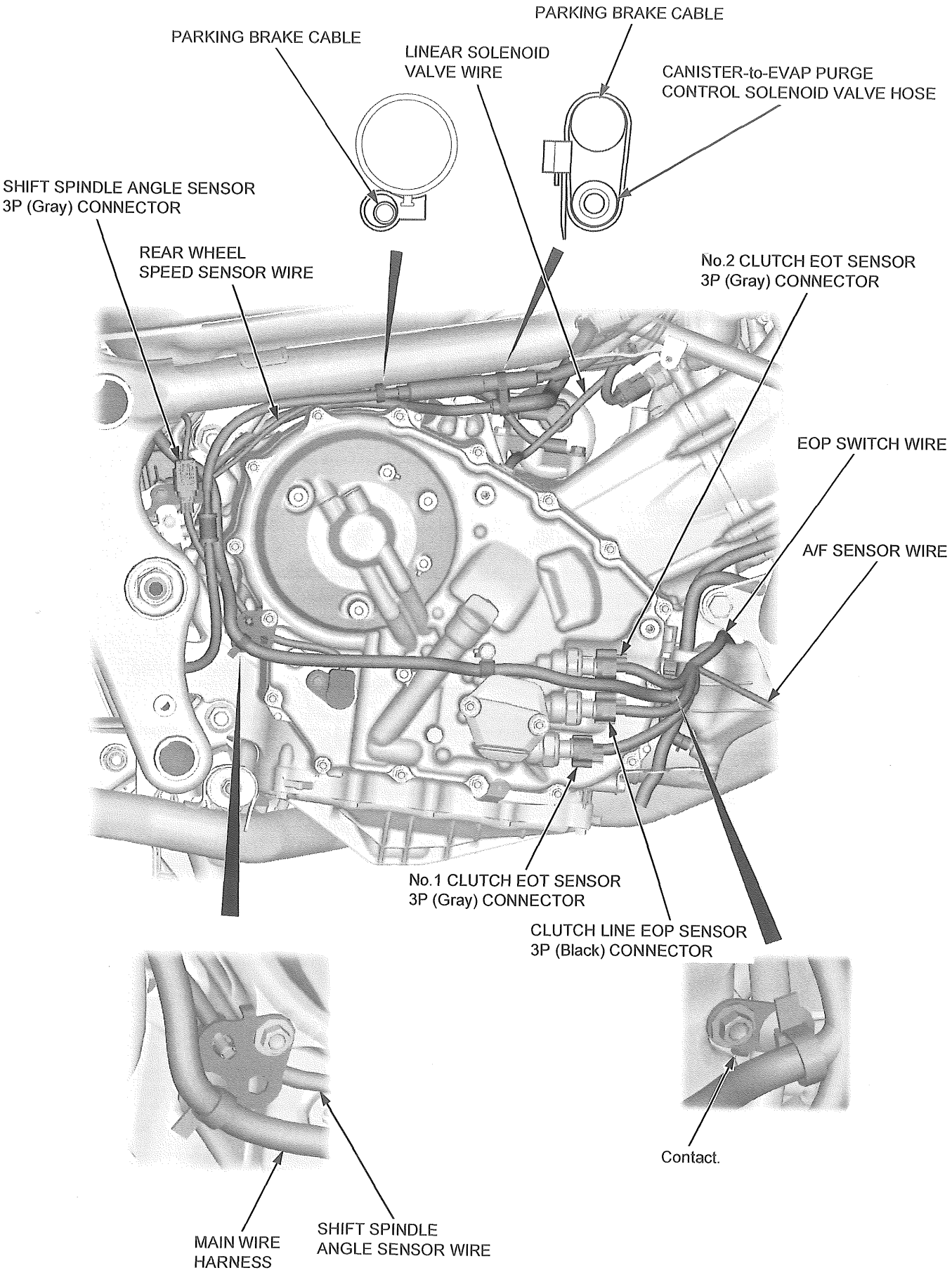
PARKING BRAKE CABLE
PARKING BRAKE CABLE
LINEAR SOLENOID VALVE WIRE
CANISTER-to-EVAP PURGE CONTROL SOLENOID VALVE HOSE
SHIFT SPINDLE ANGLE SENSOR 3P (Gray) CONNECTOR
REAR WHEEL SPEED SENSOR WIRE
No.2 CLUTCH EOT SENSOR 3P (Gray) CONNECTOR
EOP SWITCH WIRE
A/F SENSOR WIRE
No.1 CLUTCH EOT SENSOR 3P (Gray) CONNECTOR
CLUTCH LINE EOP SENSOR 3P (Black) CONNECTOR
Contact.
MAIN WIRE HARNESS
SHIFT SPINDLE ANGLE SENSOR WIRE

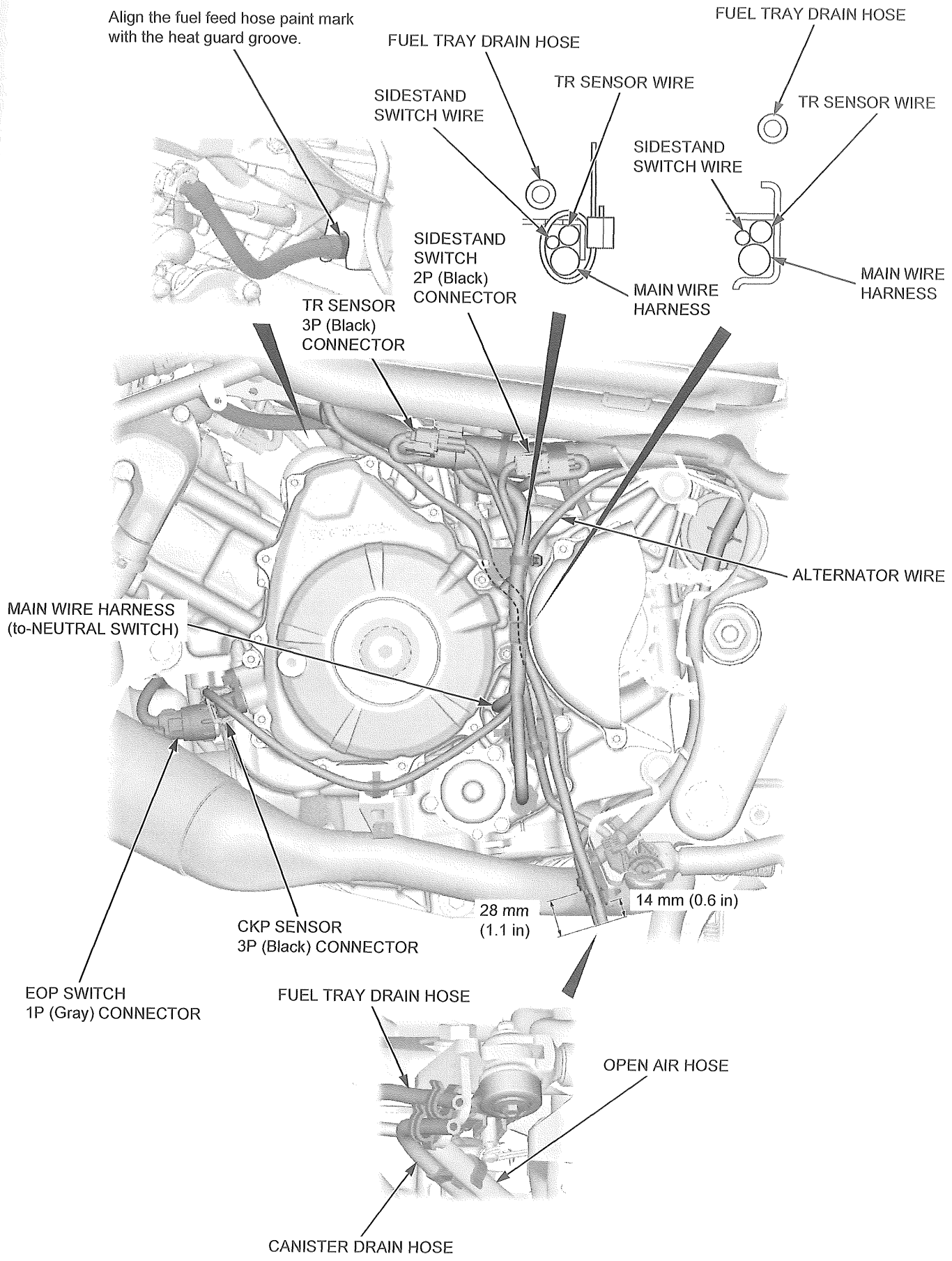
Align the fuel feed hose paint mark with the heat guard groove.
FUEL TRAY DRAIN HOSE
SIDESTAND SWITCH WIRE
TR SENSOR WIRE
FUEL TRAY DRAIN HOSE
TR SENSOR WIRE
SIDESTAND SWITCH WIRE
SIDESTAND SWITCH 2P (Black) CONNECTOR
MAIN WIRE HARNESS
MAIN WIRE HARNESS
TR SENSOR 3P (Black) CONNECTOR
ALTERNATOR WIRE
MAIN WIRE HARNESS (to-NEUTRAL SWITCH)
28 mm (1.1 in)
14 mm (0.6 in)
CKP SENSOR 3P (Black) CONNECTOR
EOP SWITCH 1P (Gray) CONNECTOR
FUEL TRAY DRAIN HOSE
OPEN AIR HOSE
CANISTER DRAIN HOSE

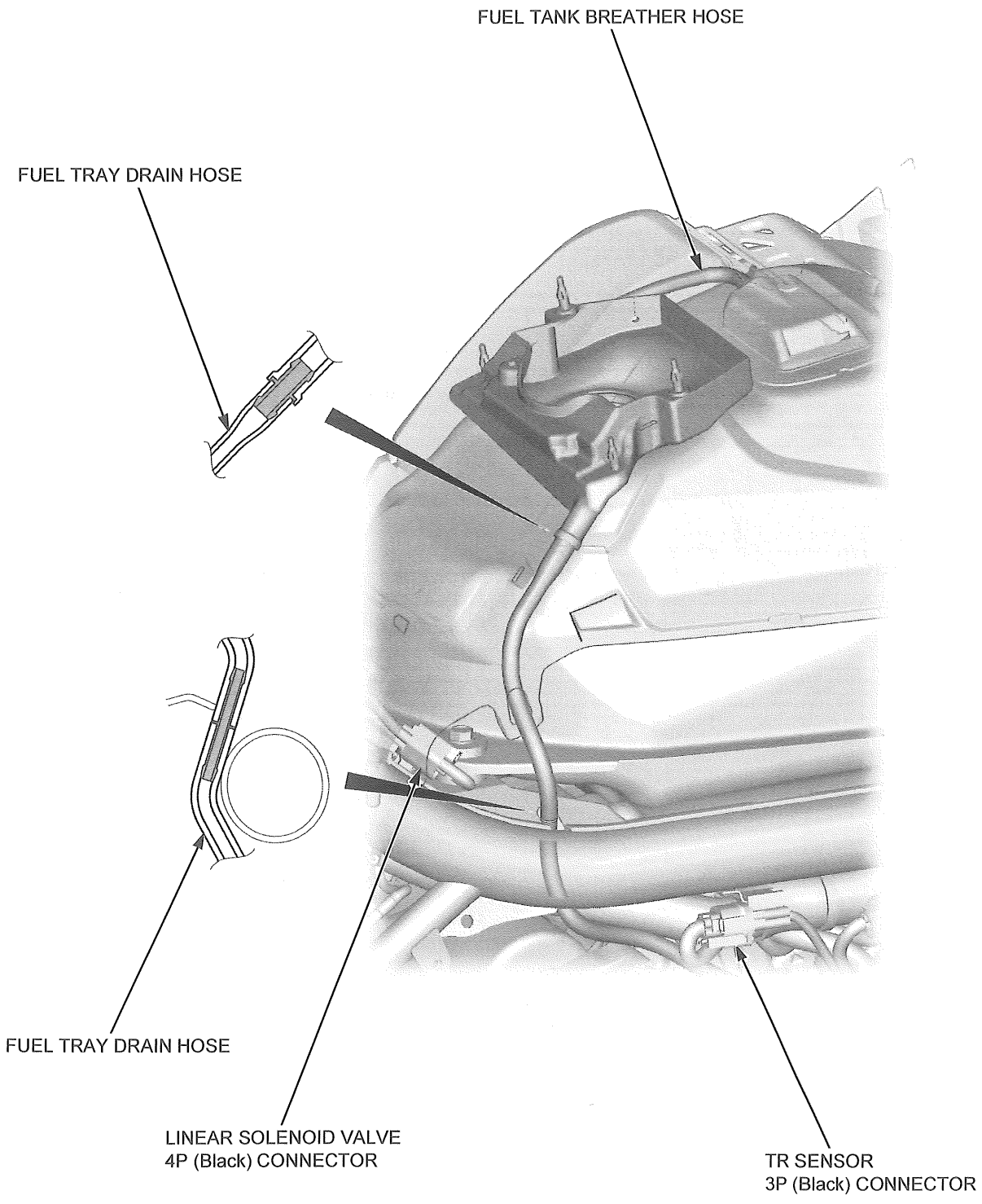
FUEL TANK BREATHER HOSE
FUEL TRAY DRAIN HOSE
FUEL TRAY DRAIN HOSE
LINEAR SOLENOID VALVE
4P (Black) CONNECTOR
TR SENSOR
3P (Black) CONNECTOR

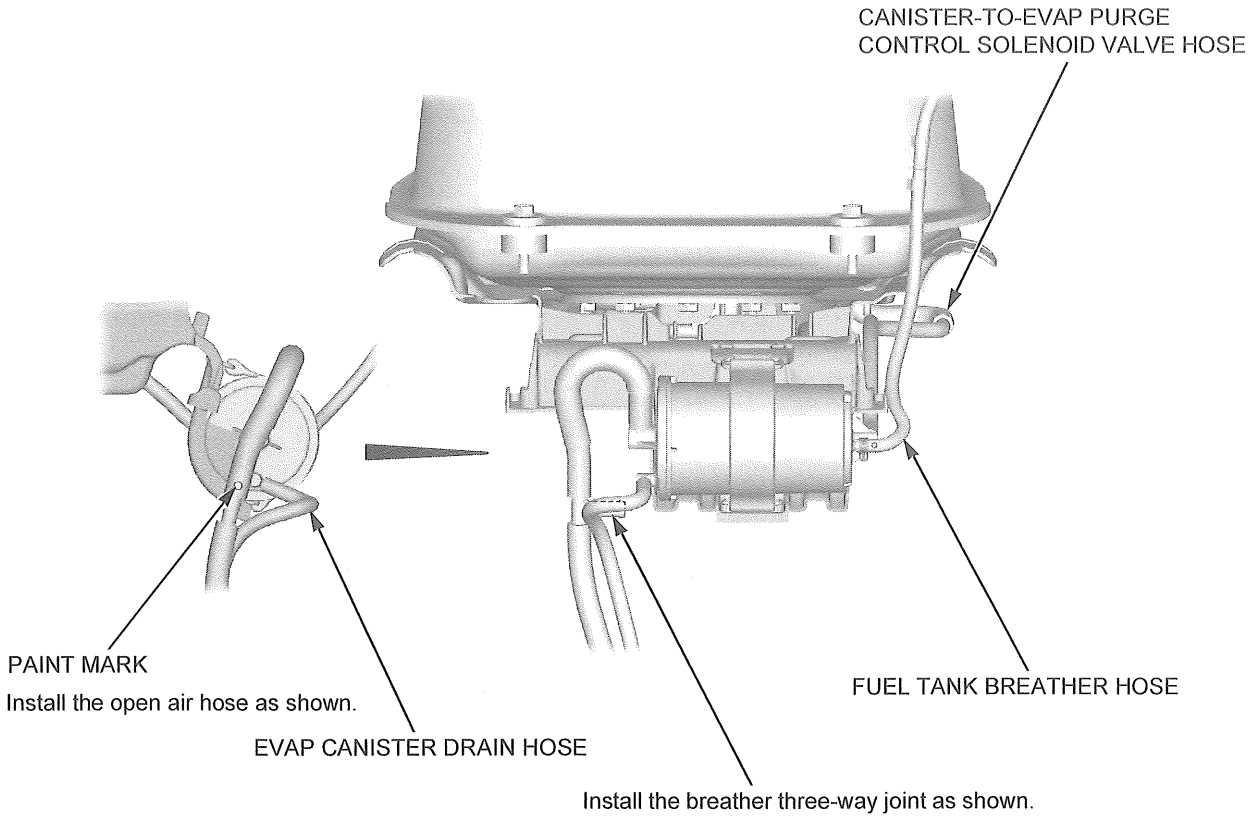
CANISTER-TO-EVAP PURGE CONTROL SOLENOID VALVE HOSE
PAINT MARK
Install the open air hose as shown.
EVAP CANISTER DRAIN HOSE
FUEL TANK BREATHER HOSE
Install the breather three-way joint as shown.

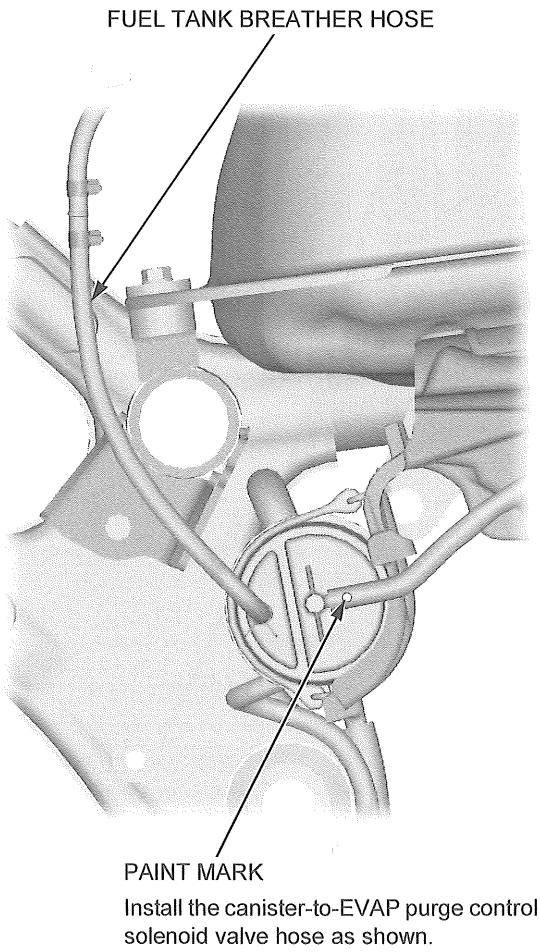
FUEL TANK BREATHER HOSE
PAINT MARK
Install the canister-to-EVAP purge control solenoid valve hose as shown.

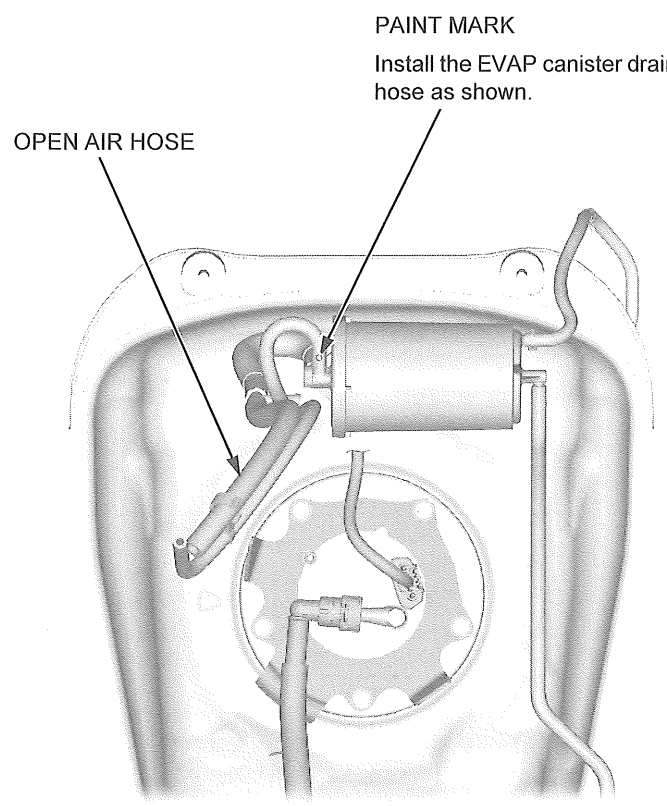
PAINT MARK
Install the EVAP canister drain hose as shown.
OPEN AIR HOSE

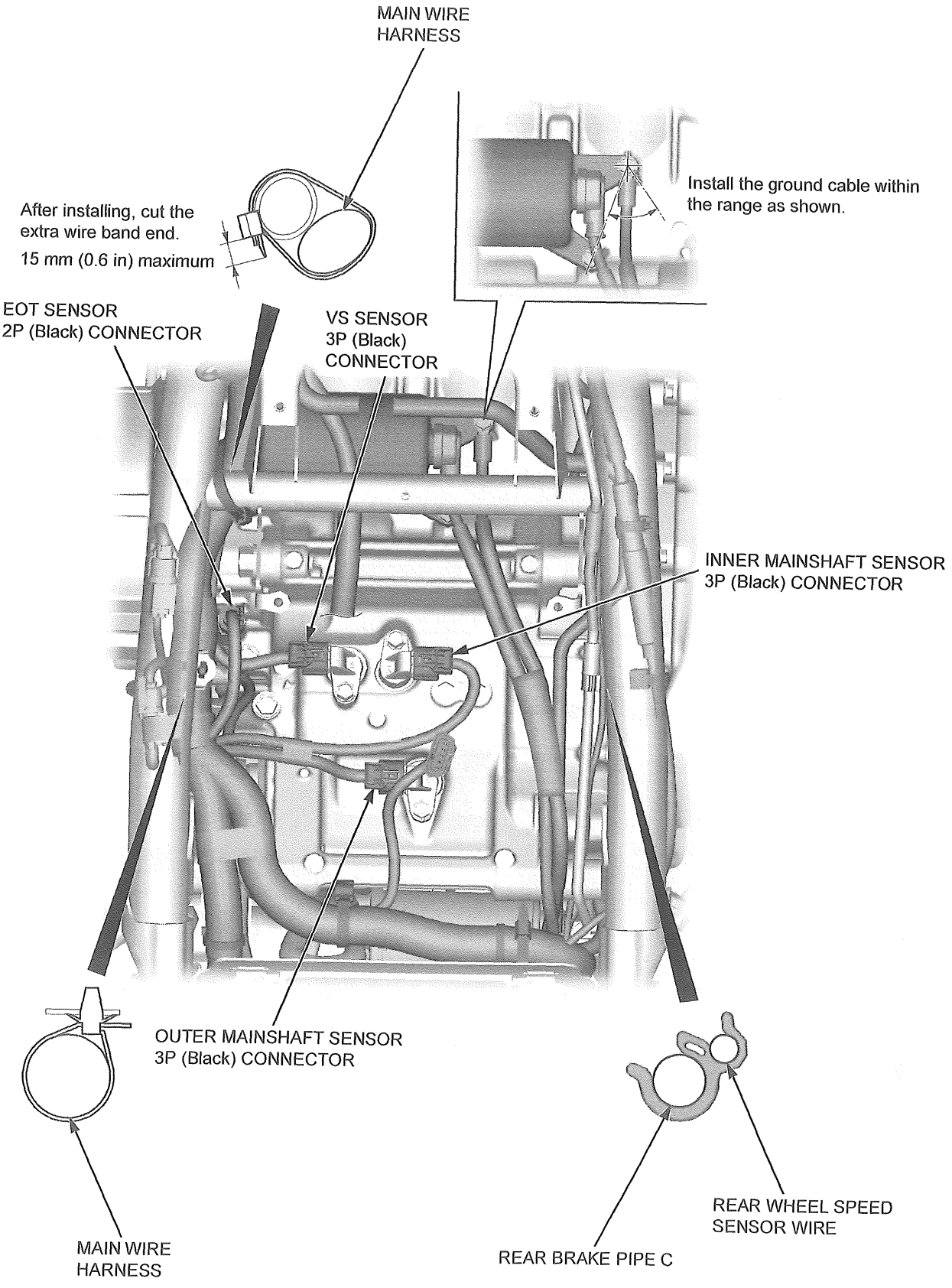
MAIN WIRE HARNESS
After installing, cut the extra wire band end.
15 mm (0.6 in) maximum
Install the ground cable within the range as shown.
EOT SENSOR 2P (Black) CONNECTOR
VS SENSOR 3P (Black) CONNECTOR
INNER MAINSHAFT SENSOR 3P (Black) CONNECTOR
OUTER MAINSHAFT SENSOR 3P (Black) CONNECTOR
MAIN WIRE HARNESS
REAR BRAKE PIPE C
REAR WHEEL SPEED SENSOR WIRE

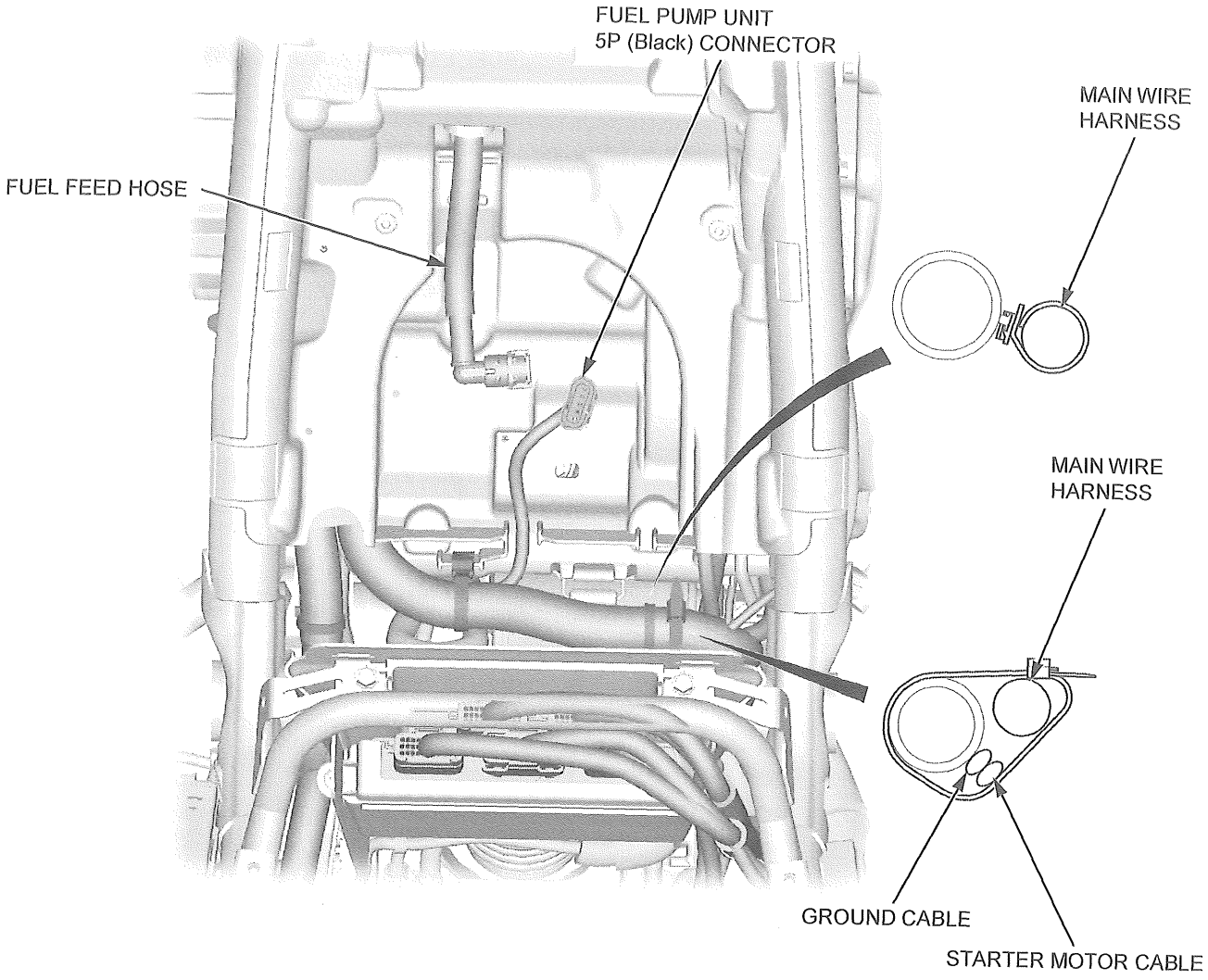
FUEL PUMP UNIT
5P (Black) CONNECTOR
MAIN WIRE HARNESS
FUEL FEED HOSE
MAIN WIRE HARNESS
GROUND CABLE
STARTER MOTOR CABLE

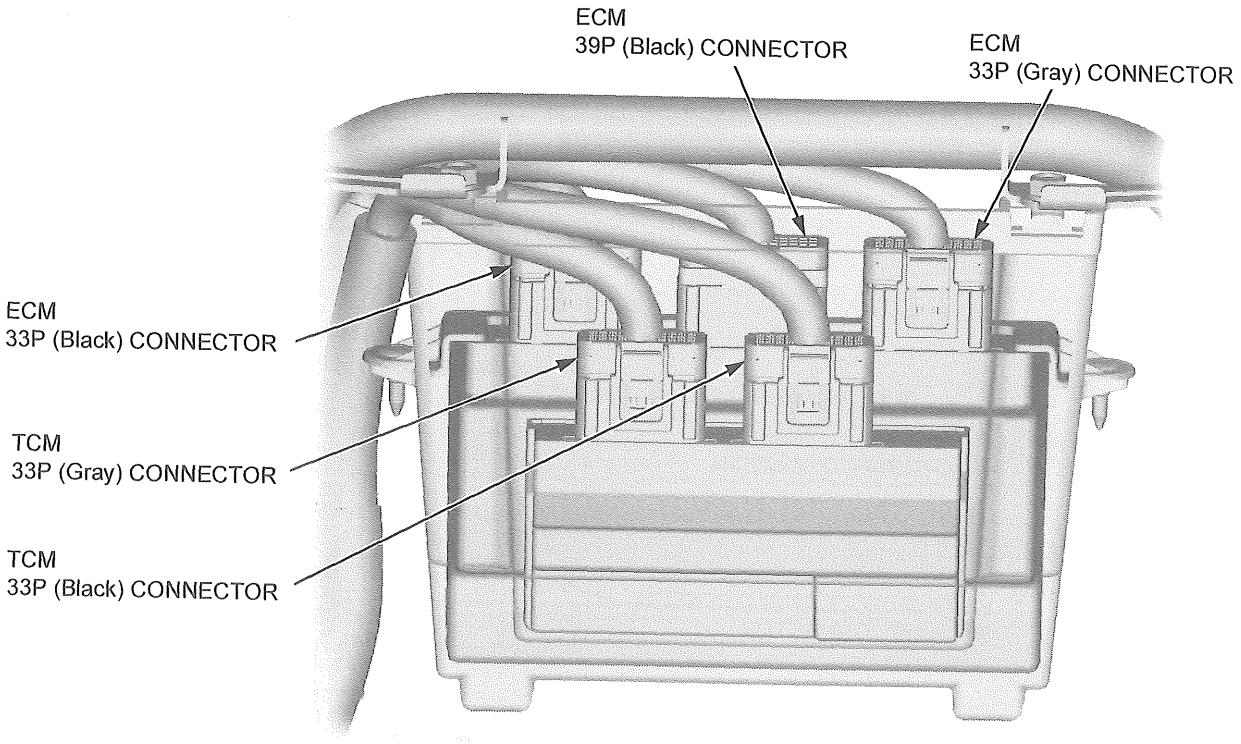
ECM
39P (Black) CONNECTOR
ECM
33P (Gray) CONNECTOR
ECM
33P (Black) CONNECTOR
TCM
33P (Gray) CONNECTOR
TCM
33P (Black) CONNECTOR

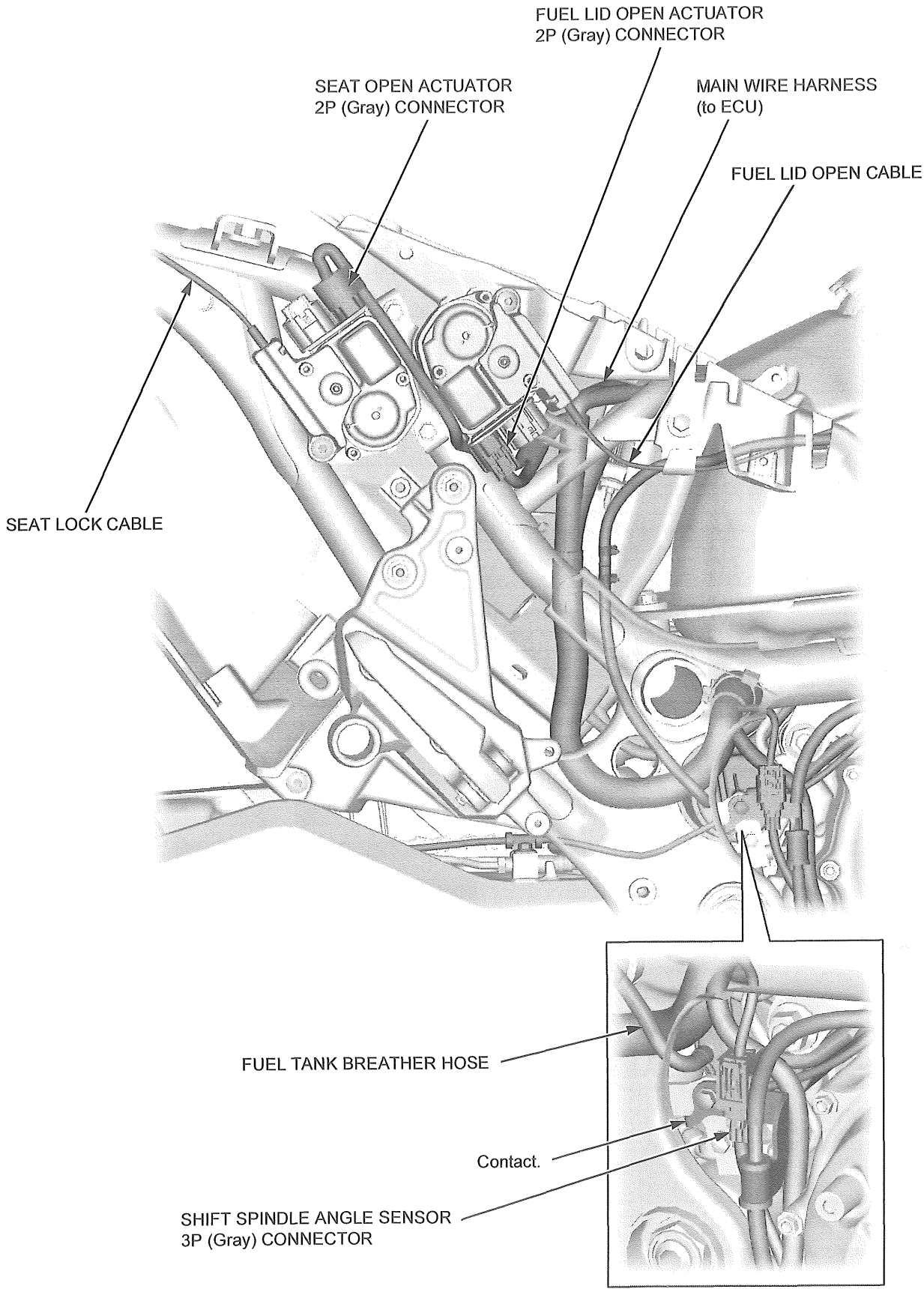
FUEL LID OPEN ACTUATOR
2P (Gray) CONNECTOR
SEAT OPEN ACTUATOR
2P (Gray) CONNECTOR
MAIN WIRE HARNESS
(to ECU)
FUEL LID OPEN CABLE
SEAT LOCK CABLE
FUEL TANK BREATHER HOSE
Contact.
SHIFT SPINDLE ANGLE SENSOR
3P (Gray) CONNECTOR

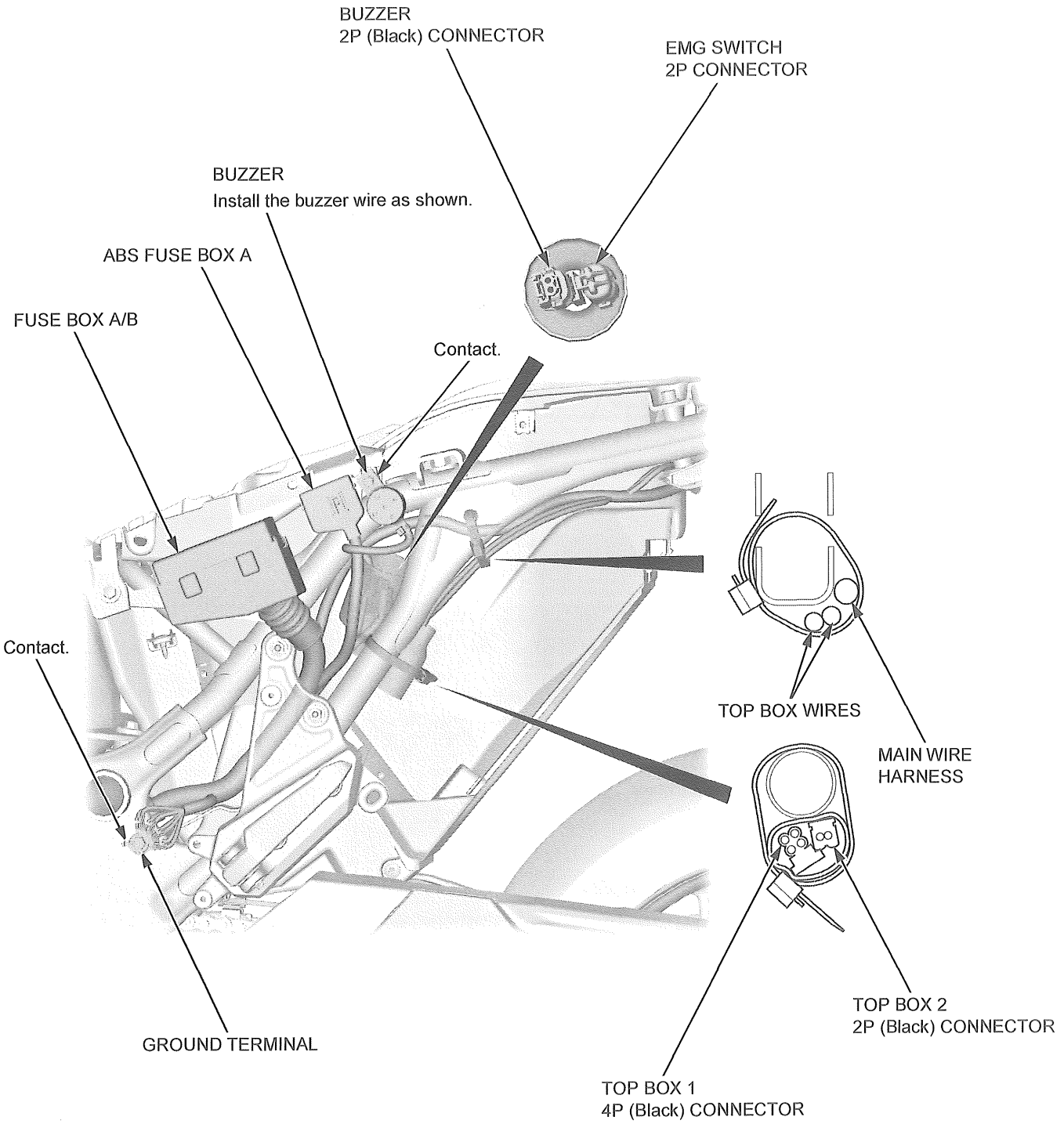
BUZZER
2P (Black) CONNECTOR
EMG SWITCH
2P CONNECTOR
BUZZER
Install the buzzer wire as shown.
ABS FUSE BOX A
FUSE BOX A/B
Contact.
Contact.
TOP BOX WIRES
MAIN WIRE
HARNESS
GROUND TERMINAL
TOP BOX 2
2P (Black) CONNECTOR
TOP BOX 1
4P (Black) CONNECTOR

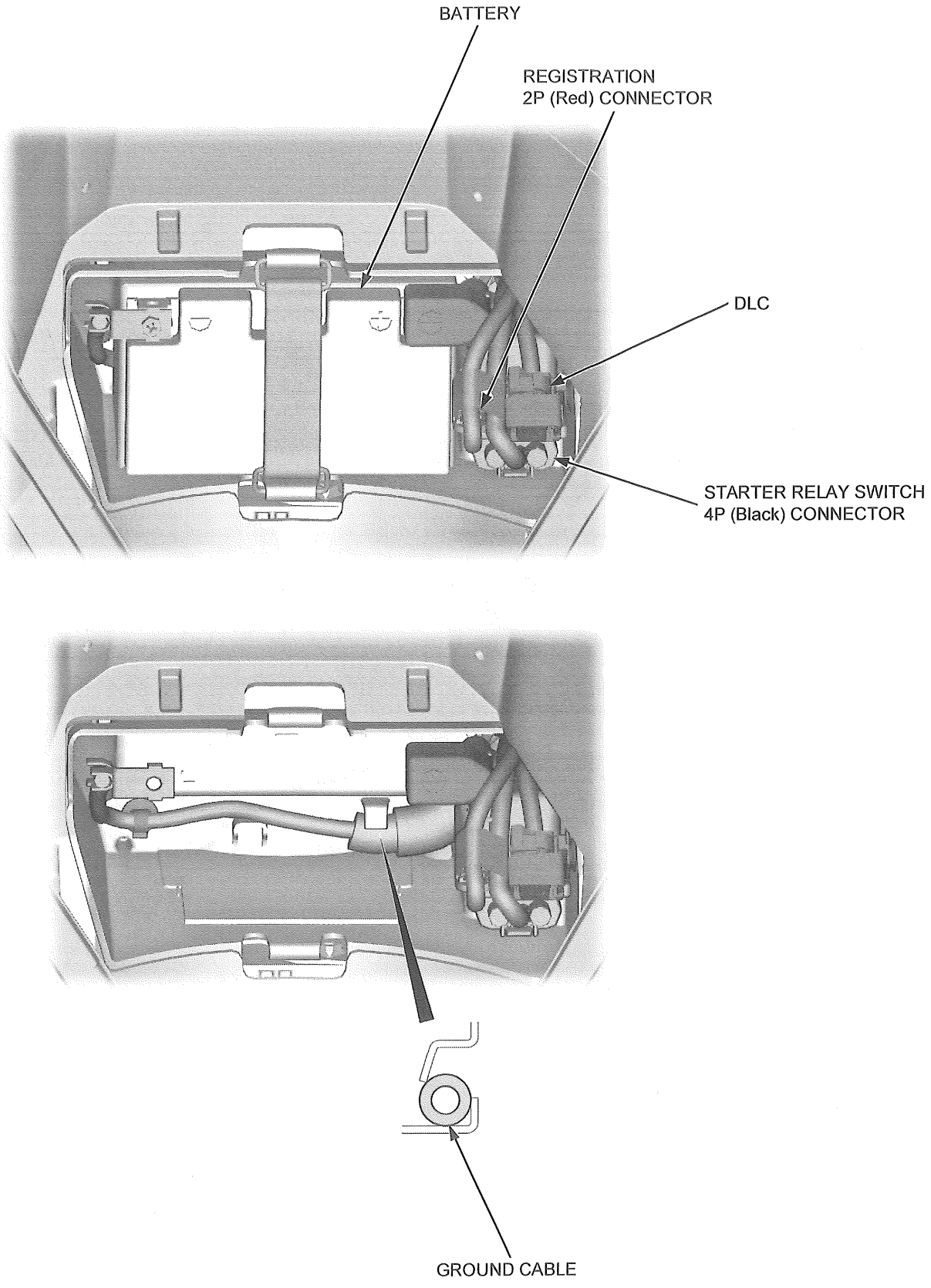
BATTERY
REGISTRATION
2P (Red) CONNECTOR
DLC
STARTER RELAY SWITCH
4P (Black) CONNECTOR
GROUND CABLE

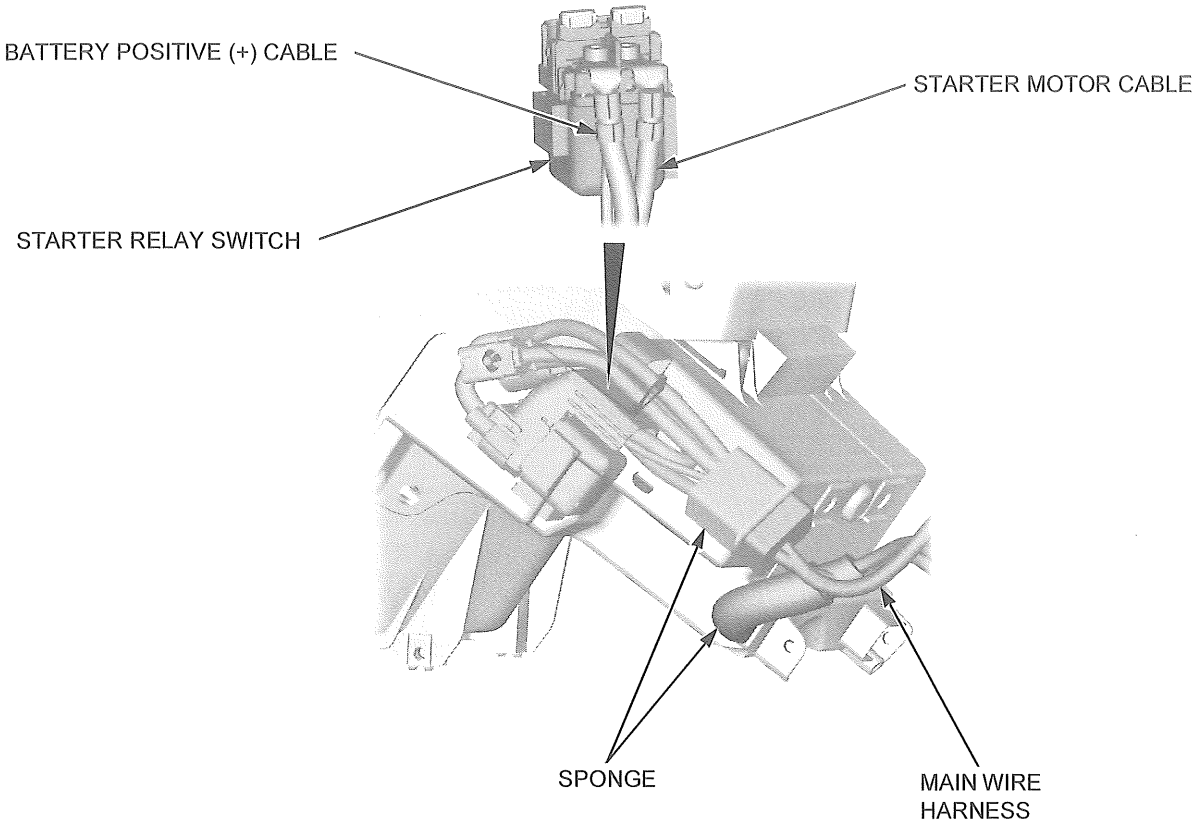
BATTERY POSITIVE (+) CABLE
STARTER MOTOR CABLE
STARTER RELAY SWITCH
SPONGE
MAIN WIRE HARNESS

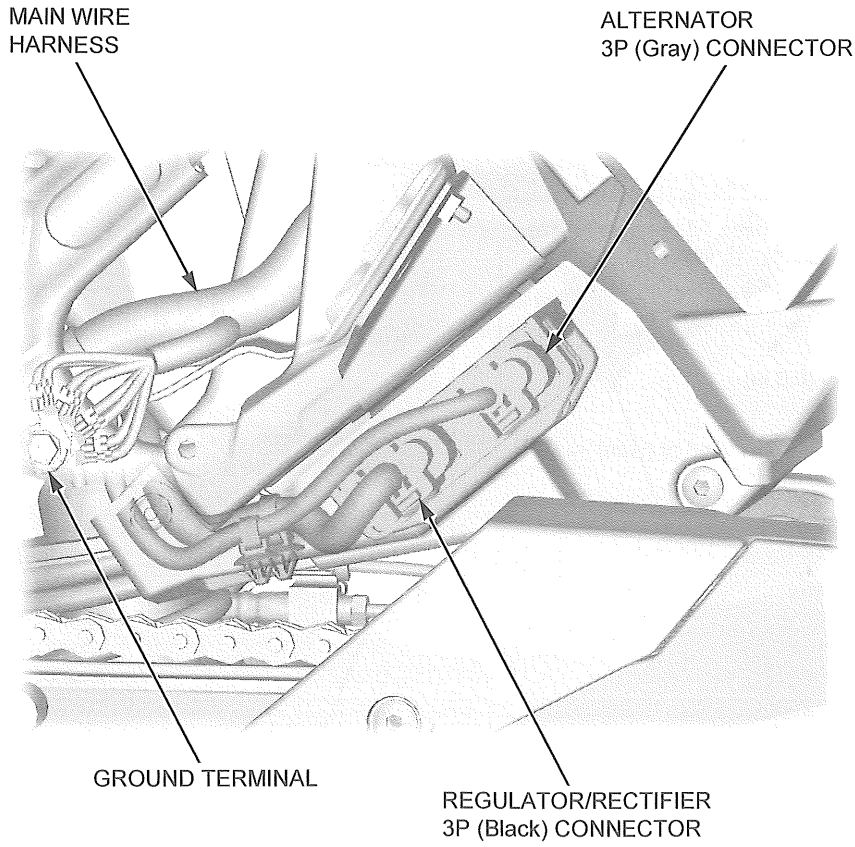
MAIN WIRE HARNESS
ALTERNATOR 3P (Gray) CONNECTOR
GROUND TERMINAL
REGULATOR/RECTIFIER 3P (Black) CONNECTOR

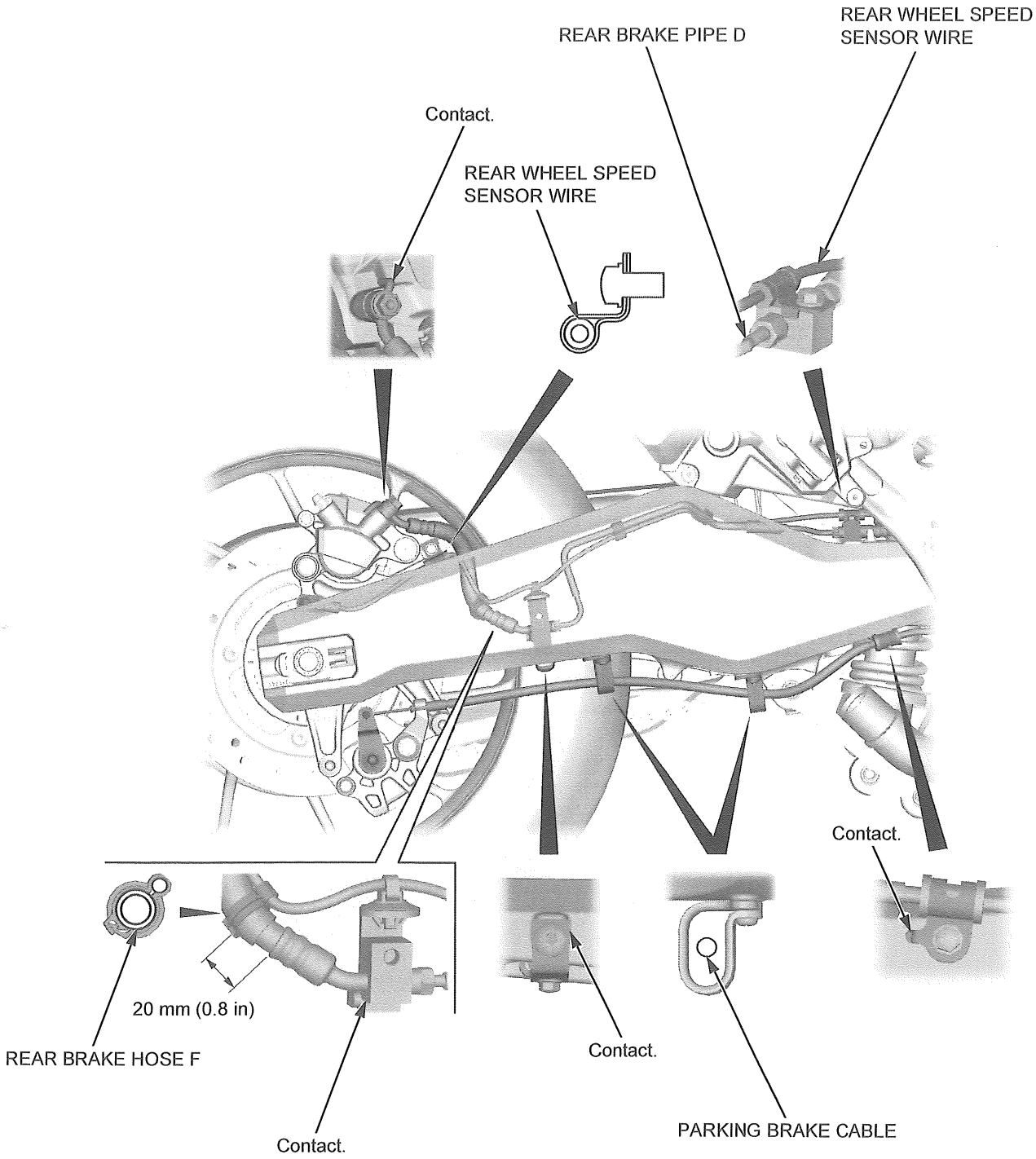
REAR BRAKE PIPE D
REAR WHEEL SPEED SENSOR WIRE
Contact.
REAR WHEEL SPEED SENSOR WIRE
Contact.
20 mm (0.8 in)
REAR BRAKE HOSE F
Contact.
Contact.
PARKING BRAKE CABLE

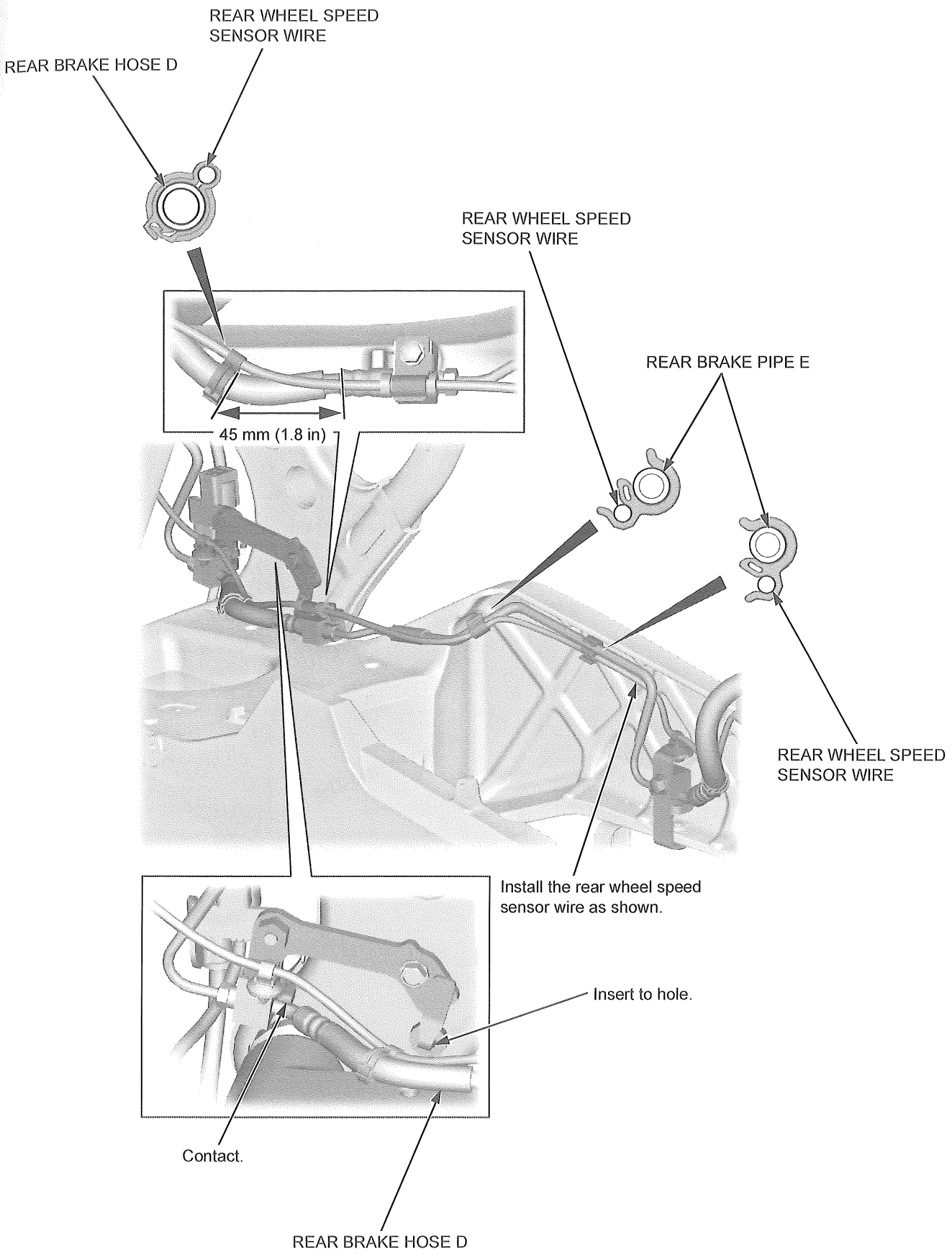
REAR WHEEL SPEED SENSOR WIRE
REAR BRAKE HOSE D
REAR WHEEL SPEED SENSOR WIRE
REAR BRAKE PIPE E
45 mm (1.8 in)
REAR WHEEL SPEED SENSOR WIRE
Install the rear wheel speed sensor wire as shown.
Insert to hole.
Contact.
REAR BRAKE HOSE D

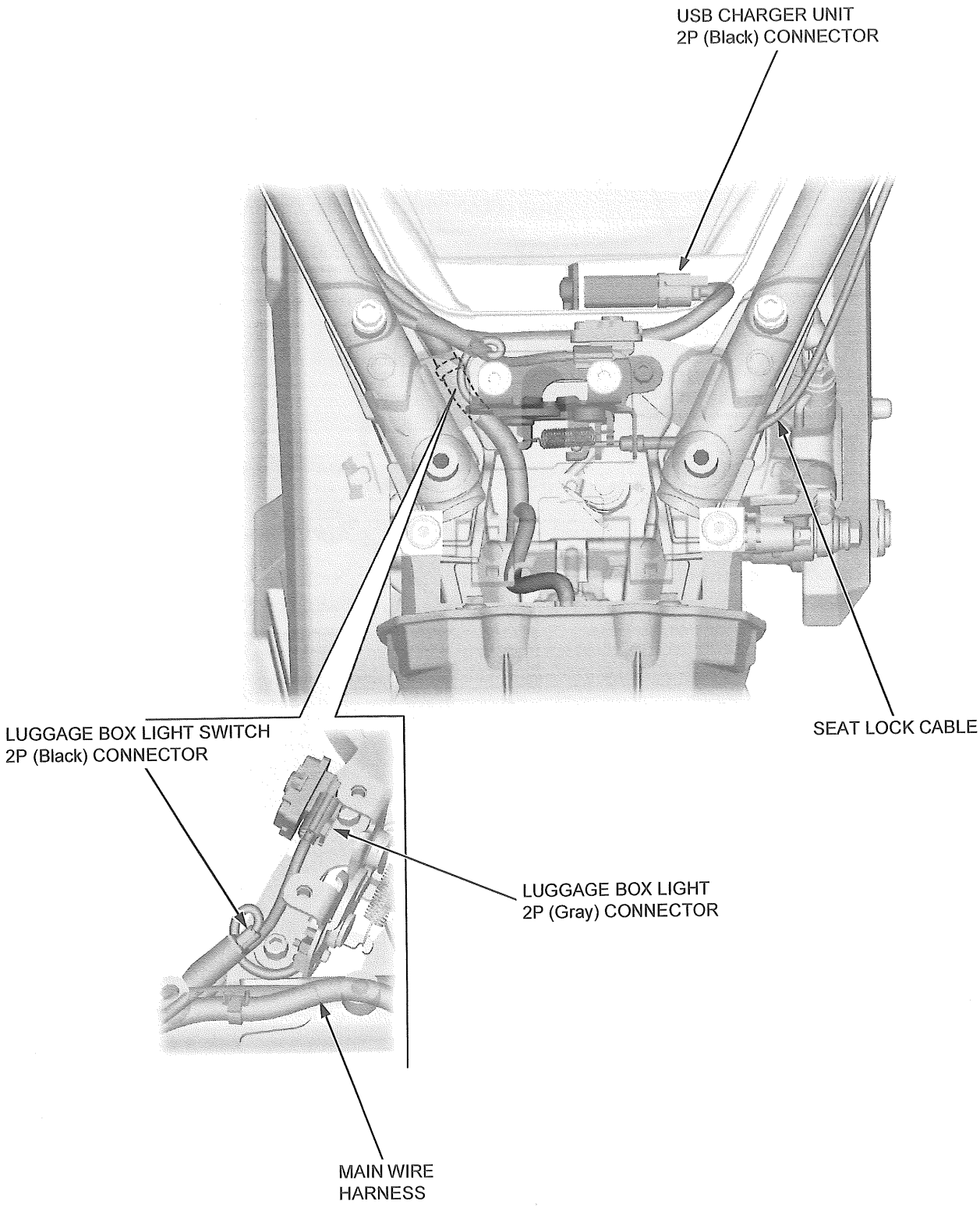
USB CHARGER UNIT
2P (Black) CONNECTOR
LUGGAGE BOX LIGHT SWITCH
2P (Black) CONNECTOR
SEAT LOCK CABLE
LUGGAGE BOX LIGHT
2P (Gray) CONNECTOR
MAIN WIRE
HARNESS

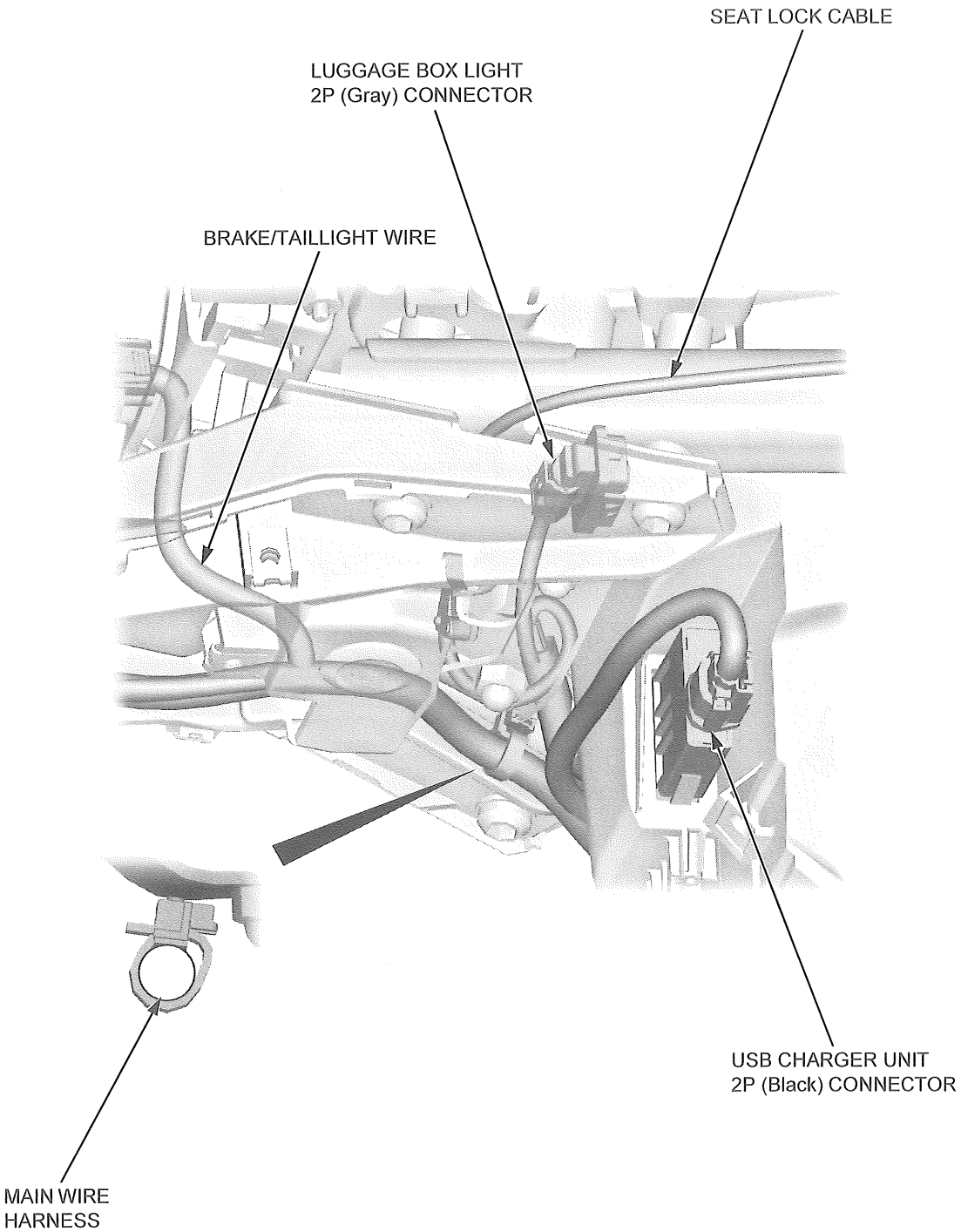
SEAT LOCK CABLE
LUGGAGE BOX LIGHT
2P (Gray) CONNECTOR
BRAKE/TAILLIGHT WIRE
USB CHARGER UNIT
2P (Black) CONNECTOR
MAIN WIRE
HARNESS

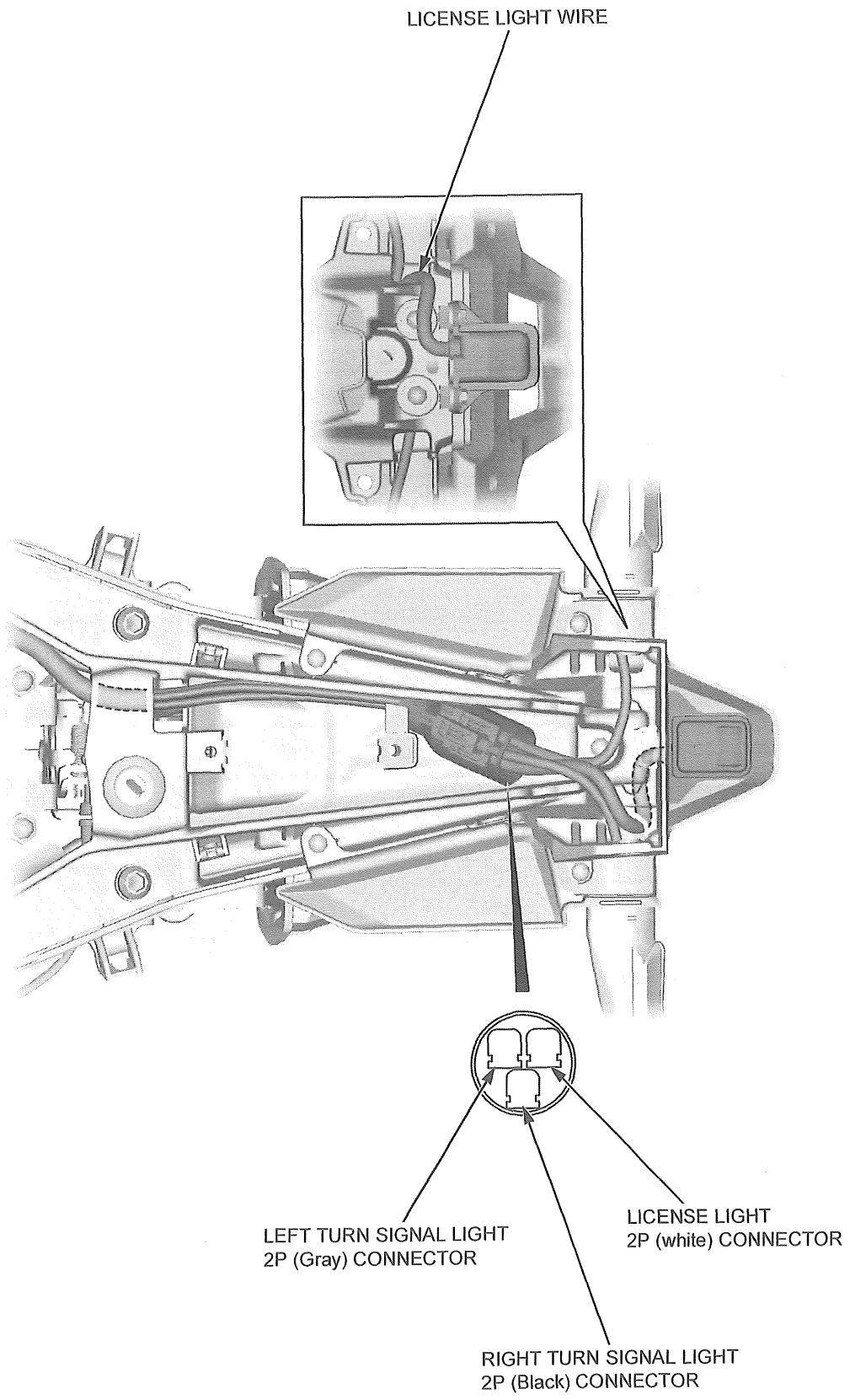
LICENSE LIGHT WIRE
LEFT TURN SIGNAL LIGHT
2P (Gray) CONNECTOR
LICENSE LIGHT
2P (white) CONNECTOR
RIGHT TURN SIGNAL LIGHT
2P (Black) CONNECTOR

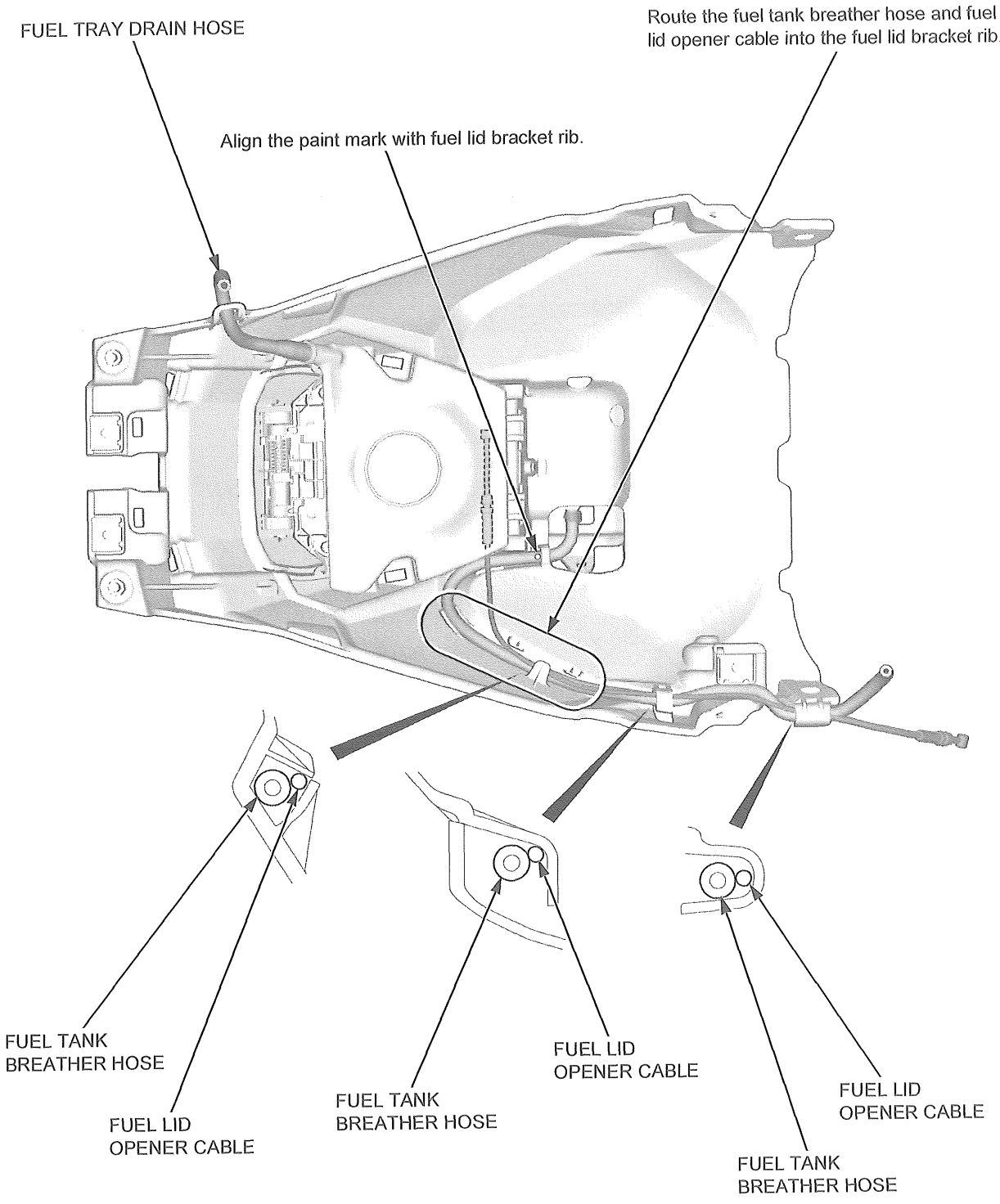
FUEL TRAY DRAIN HOSE
Route the fuel tank breather hose and fuel lid opener cable into the fuel lid bracket rib.
Align the paint mark with fuel lid bracket rib.
FUEL TANK BREATHER HOSE
FUEL LID OPENER CABLE
FUEL TANK BREATHER HOSE
FUEL LID OPENER CABLE
FUEL LID OPENER CABLE
FUEL TANK BREATHER HOSE

EMISSION CONTROL SYSTEMS

SOURCE OF EMISSIONS

Fuel evaporation and the combustion process produces carbon monoxide (CO), oxides of nitrogen (NOx), and hydrocarbons (HC
The control of hydrocarbons and oxides of nitrogen is very important because, under certain conditions, they react to for
photochemical smog when subjected to sunlight. Carbon monoxide does not react in the same way, but it is toxic. Uncontrolled fu
evaporation also releases hydrocarbons to the atmosphere.

Honda Motor Co., Ltd. utilizes various systems to reduce carbon monoxide, oxides of nitrogen and hydrocarbons.

CRANKCASE EMISSION CONTROL SYSTEM

The engine is equipped with a closed crankcase system to prevent discharging crankcase emissions into the atmosphere.

Blow-by gas is returned to the combustion chamber through the air cleaner and throttle body.

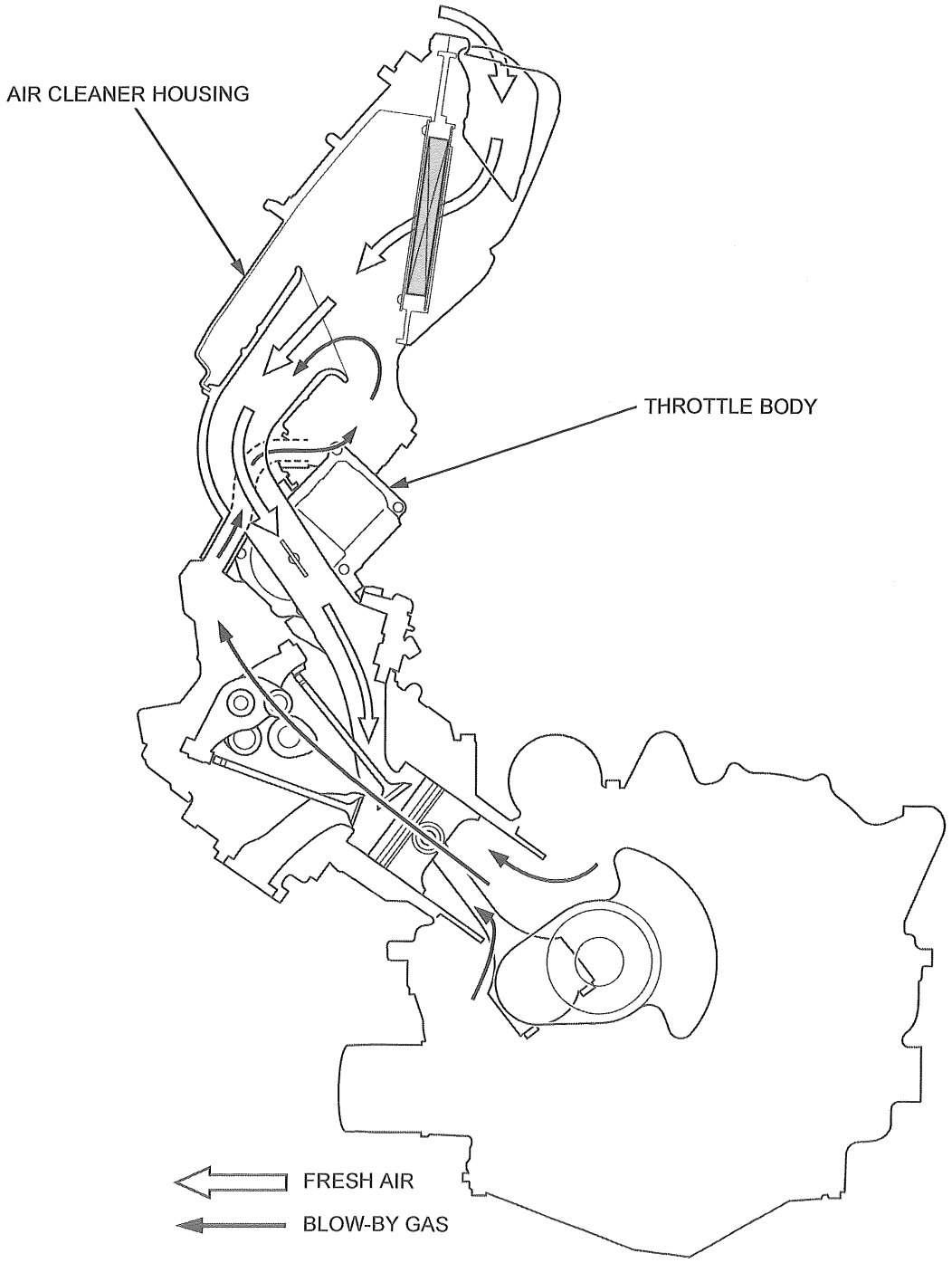

EXHAUST EMISSION CONTROL SYSTEM

The exhaust emission control system is composed of a three-way catalytic converter and PGM-FI system.

The exhaust emission control system is separate from the crankcase emission control system.

THREE-WAY CATALYTIC CONVERTER

This motorcycle is equipped with a three-way catalytic converter.

The three-way catalytic converter is in the exhaust system. Through chemical reactions, it converts HC, CO, and NOx in the engine's exhaust to carbon dioxide (CO_2), nitrogen (N_2), and water vapor.

No adjustment to these systems should be made although periodic inspection of the components is recommended.

EVAPORATIVE EMISSION CONTROL SYSTEM

Fuel vapor from the fuel tank is routed into the EVAP canister where it is absorbed and stored while the engine is stopped. When the engine is running and the EVAP purge control solenoid valve is open, fuel vapor in the EVAP canister is drawn into the engine.

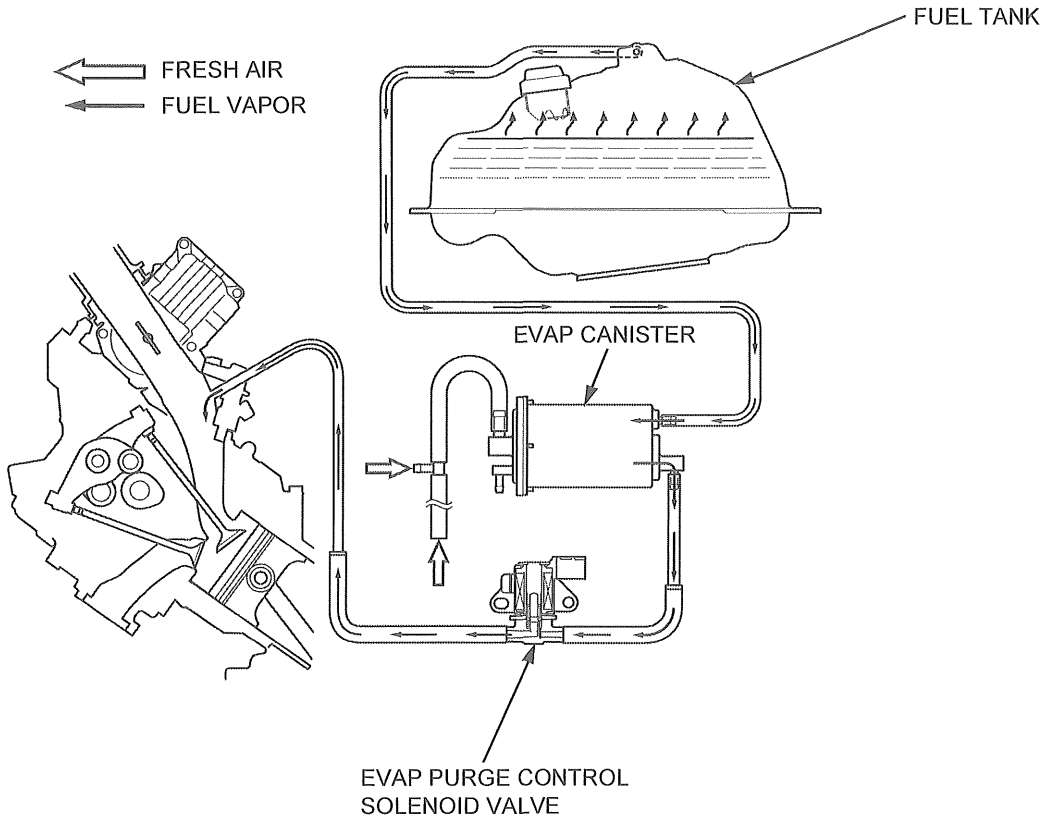

NOISE EMISSION CONTROL SYSTEM

TAMPERING WITH THE NOISE EMISSION CONTROL SYSTEM IS PROHIBITED: Local law prohibits the following acts or the causing thereof: (1) The removal or rendering inoperative by any person, other than for the purposes of maintenance, repair or replacement, of any device or element of design incorporated into any motorcycle for the purpose of noise control prior to its sale or delivery to the ultimate customer or while it is in use; or (2) the use of the motorcycle after such device or element of design has been removed or rendered inoperative by any person.

AMONG THOSE ACTS PRESUMED TO CONSTITUTE TAMPERING ARE THE ACTS LISTED BELOW:

1. Removal of or puncturing of the muffler, baffles, header pipes or any other component which conducts exhaust gases.
2. Removal of or puncturing of any part of the intake system.
3. Lack of proper maintenance.
4. Replacing any moving parts of the motorcycle, or parts of the exhaust or intake system, with parts other than those specified by the manufacturer.

TECHNICAL FEATURES

HSVCs (Honda Smartphone Voice Control system)

The HSVCs consists of the BTU integrated in the combination meter, HSVCs application, smartphone and headset. The smartphone and headset are commercially available parts.

The smartphone is wirelessly connected to the BTU and headset by the Bluetooth® (pairing).

The telephone, mail, audio and navigation system function of the smartphone can be used by operating the handlebar switch or inputting your voice through the Bluetooth® headset.

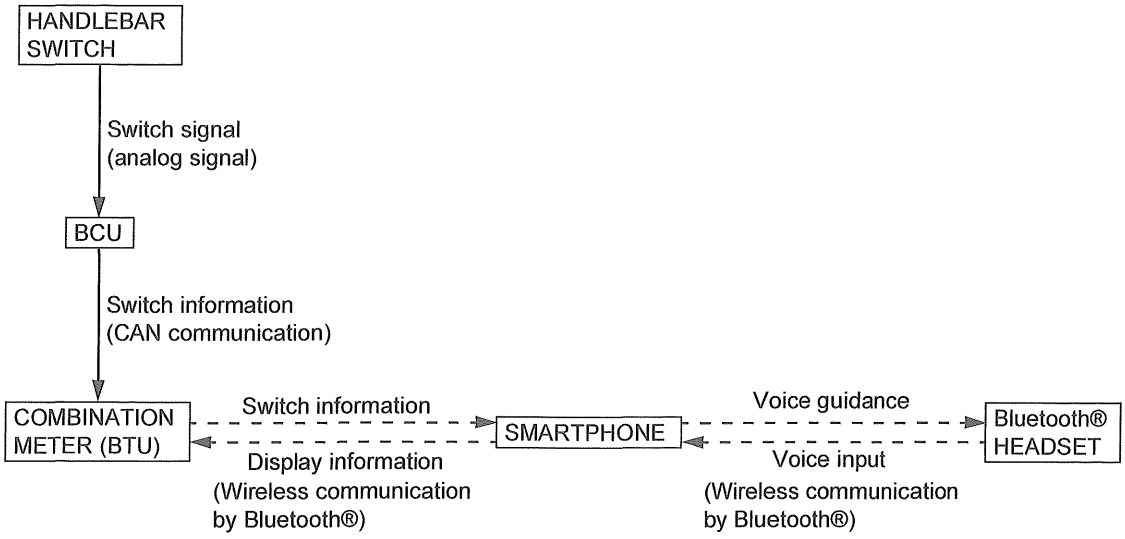

2. FRAME/BODY PANELS/EXHAUST SYSTEM

SERVICE INFORMATION 2-2

TROUBLESHOOTING 2-2

BODY PANEL LOCATIONS 2-3

WINDSCREEN 2-5

REARVIEW MIRROR 2-5

FRONT FENDER 2-6

INNER PANEL 2-7

HANDLE UPPER CENTER COVER 2-8

HANDLE FRONT COVER 2-8

HANDLE REAR COVER 2-9

INNER COWL/INNER CENTER COWL/
FRONT INNER COWL 2-9

INNER COVER 2-11

HOLDER METER COVER 2-12

FRONT LOWER COVER 2-13

FLOOR SKIRT/FLOOR STEP 2-14

FRONT SIDE COWL 2-15

UPPER METER COVER/FRONT COWL/
AIR INTAKE COVER 2-17

STEP PANEL/SIDE PANEL 2-18

CENTER LOWER COVER 2-21

LUGGAGE BOX COVER 2-21

FUEL LID BRACKET 2-22

HEAT GUARD 2-24

REAR COWL 2-25

REAR CENTER UPPER COVER 2-25

REAR CENTER LOWER COVER 2-25

LUGGAGE BOX/BATTERY BOX 2-26

LICENSE LIGHT BRACKET 2-28

LICENSE LIGHT COVER 2-28

FENDER A STAY 2-29

REAR FENDER B 2-30

REAR FENDER C 2-30

DRIVE CHAIN CASE 2-31

CENTERSTAND 2-31

SIDESTAND 2-32

SEAT 2-32

PILLION STEP HOLDER 2-33

GRAB RAIL 2-33

EXHAUST PIPE/MUFFLER 2-34

LEFT REAR COVER 2-36

SERVICE INFORMATION

GENERAL

- This section covers removal and installation of the body panels and exhaust system.
- Always replace the gaskets with new ones after removing the exhaust system.
- When installing the exhaust system, loosely install all of the exhaust pipe fasteners. Always tighten the exhaust pipe joint nuts first, then tighten the mounting bolts.
- Always inspect the exhaust system for leaks after installation.

TROUBLESHOOTING

Excessive exhaust noise
- Broken exhaust system
- Exhaust gas leak

Poor performance
- Deformed exhaust system
- Exhaust gas leak
- Clogged muffler

BODY PANEL LOCATIONS

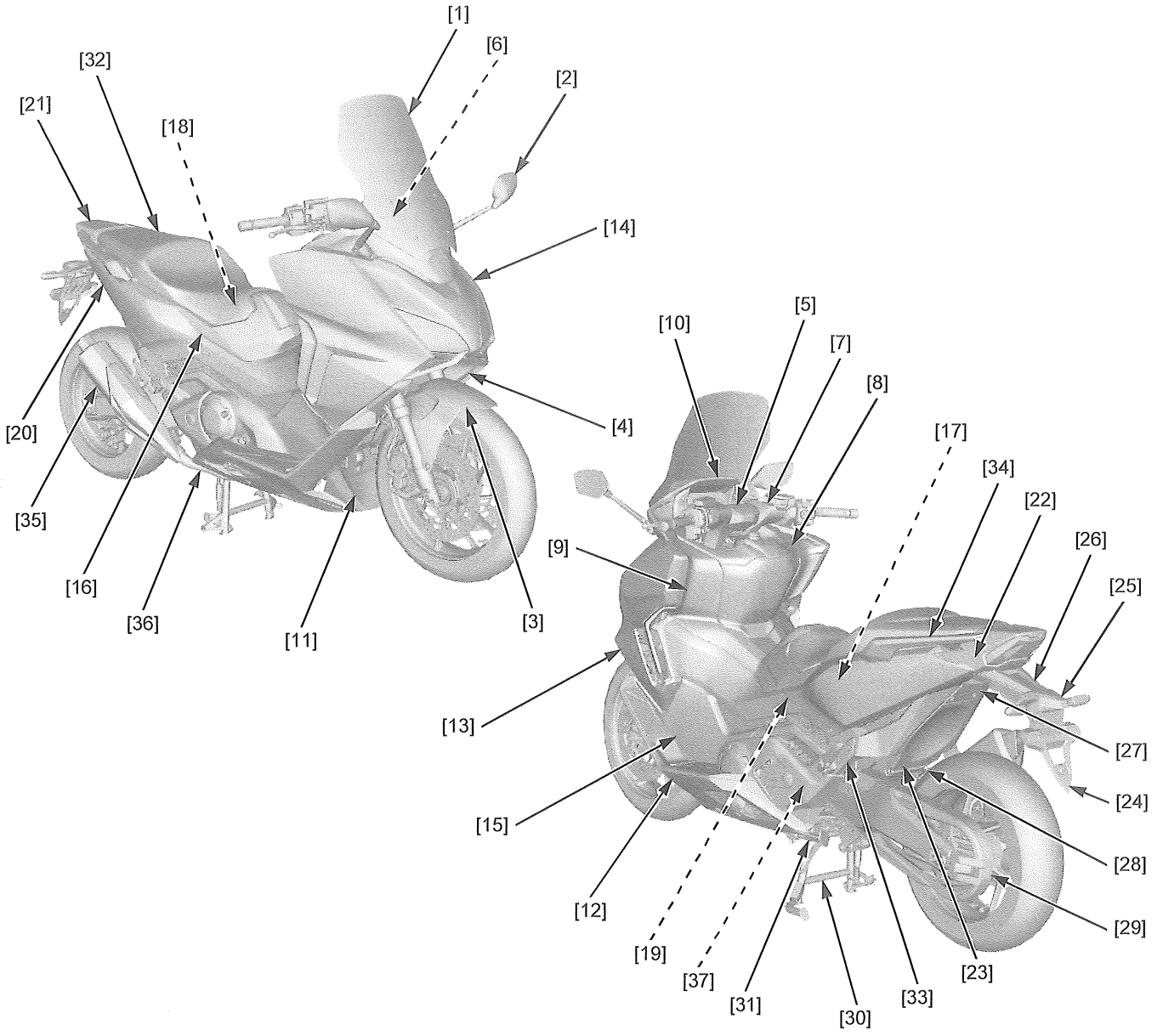

[1]	Windscreen (page 2-5)	[14]	Upper meter cover/front cowl/air intake cover (page 2-17)	[27]	Rear fender B (page 2-30)
[2]	Rearview mirror (page 2-5)	[15]	Step panel/side panel (page 2-18)	[28]	Rear fender C (page 2-30)
[3]	Front fender (page 2-6)	[16]	Center lower cover (page 2-21)	[29]	Drive chain case (page 2-31)
[4]	Inner panel (page 2-7)	[17]	Luggage box cover (page 2-21)	[30]	Center stand (page 2-31)
[5]	Handle upper center cover (page 2-8)	[18]	Fuel lid bracket (page 2-22)	[31]	Sidestand (page 2-32)
[6]	Handle front cover (page 2-8)	[19]	Heat guard (page 2-24)	[32]	Seat (page 2-32)
[7]	Handle rear cover (page 2-9)	[20]	Rear cowl (page 2-25)	[33]	Pillion step holder (page 2-33)
[8]	Inner cowl/inner center cowl/front inner cowl (page 2-9)	[21]	Rear center upper cover (page 2-25)	[34]	Grab rail (page 2-33)
[9]	Inner cover (page 2-11)	[22]	Rear center lower cover (page 2-25)	[35]	Muffler (page 2-34)
[10]	Holder meter cover (page 2-12)	[23]	Luggage box/battery box (page 2-26)	[36]	Exhaust pipe (page 2-34)
[11]	Front lower cover (page 2-13)	[24]	License light bracket (page 2-28)	[37]	Left rear cover (page 2-36)
[12]	Floor skirt/floor step (page 2-14)	[25]	License light cover (page 2-28)		
[13]	Front side cowl (page 2-15)	[26]	Fender A stay (page 2-29)		

BODY PANEL REMOVAL CHART

This chart shows removal order of frame covers by means of arrow.

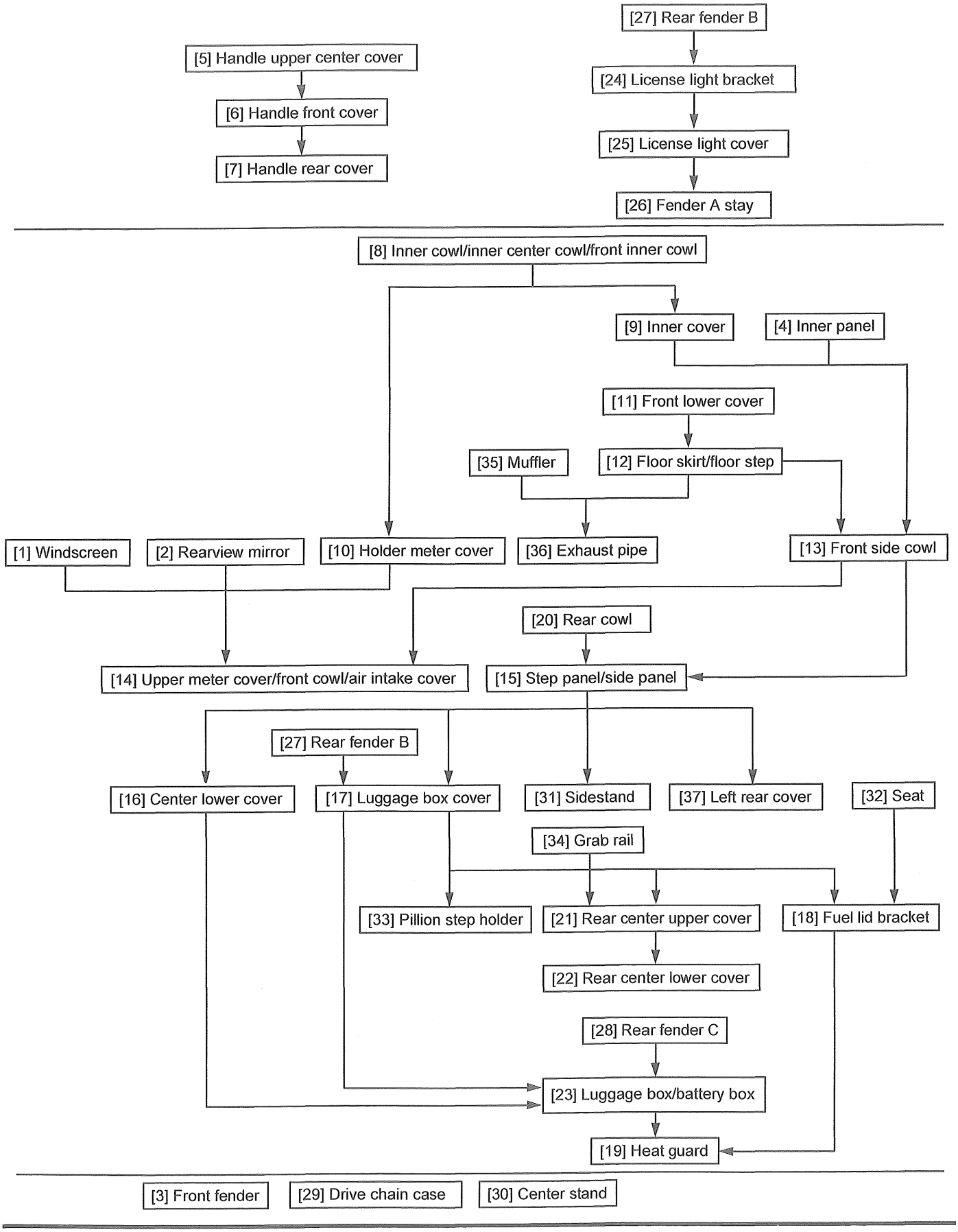

WINDSCREEN

REMOVAL/INSTALLATION

Remove the following:

- Socket bolts [1]
- Plastic washers (small) [2]
- Screen washers [3]
- Windscreen [4]
- Setting nuts [5]
- Plastic washers (Large) [6]

Installation is in the reverse order of removal.

TORQUE:

Windscreen bolt: 0.8 N·m (0.1 kgf·m, 0.6 lbf·ft)

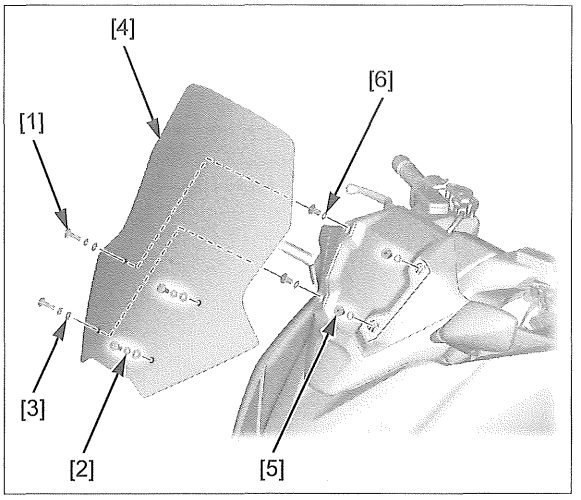

REARVIEW MIRROR

REMOVAL/INSTALLATION

Remove the socket bolts [1] and rearview mirror [2].

Installation is in the reverse order of removal.

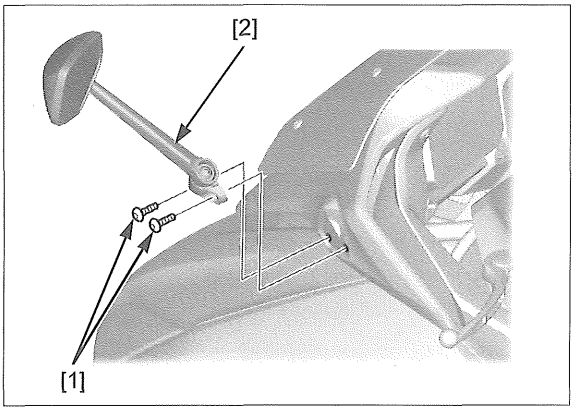

FRONT FENDER

REMOVAL/INSTALLATION

Remove the nut [1] and hose clamp [2].

Remove the bolt [3], wire clamp [4] and hose joint [5].

Remove the following parts from the fork legs:

- Socket bolts [6]
- Collars [7]
- Reflectors [8]
- Front fender [9]

Remove the grommets [10] from the front fender.

Installation is in the reverse order of removal.

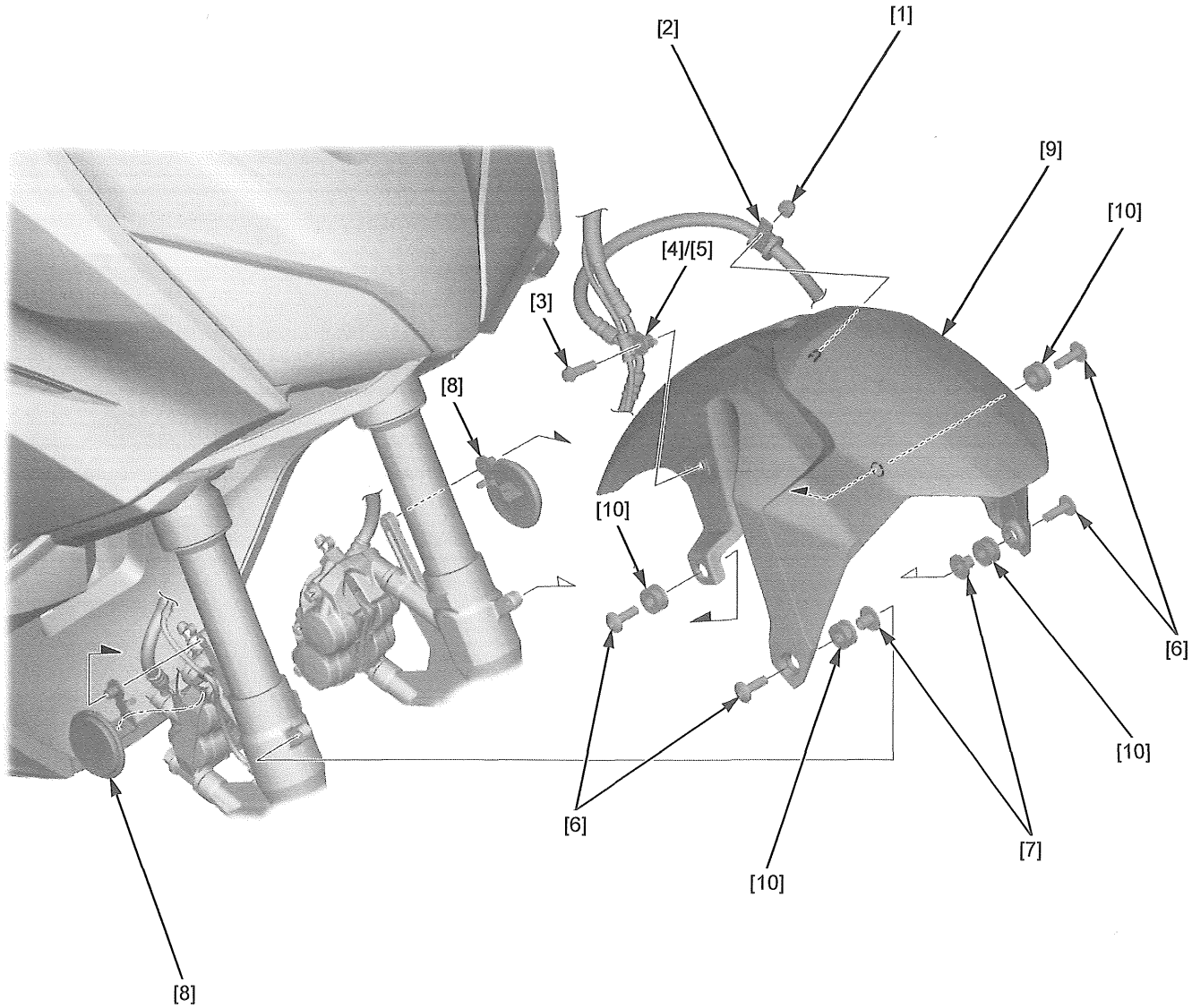

DISASSEMBLY/ASSEMBLY

Remove the screws [1] and front fender cover [2] from the front fender [3].

Installation is in the reverse order of removal.

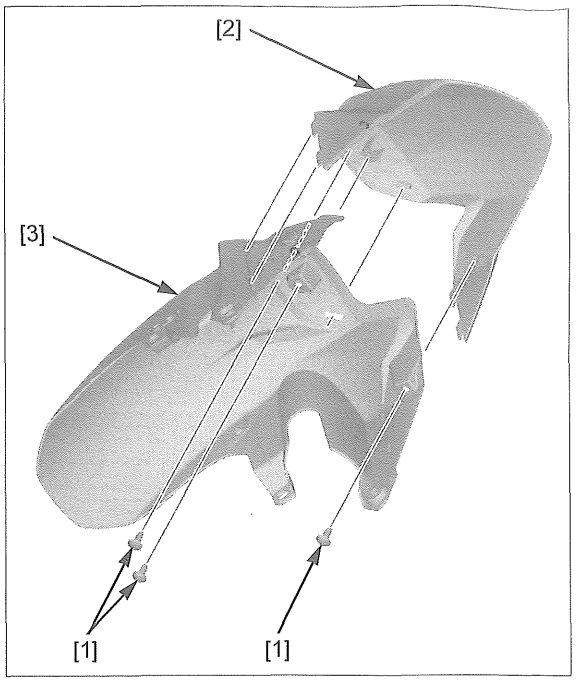

INNER PANEL

REMOVAL/INSTALLATION

Remove the socket bolts [1], clips (small) [2], clips (large) [3], left inner panel [4] and right inner panel [5].

Installation is in the reverse order of removal.

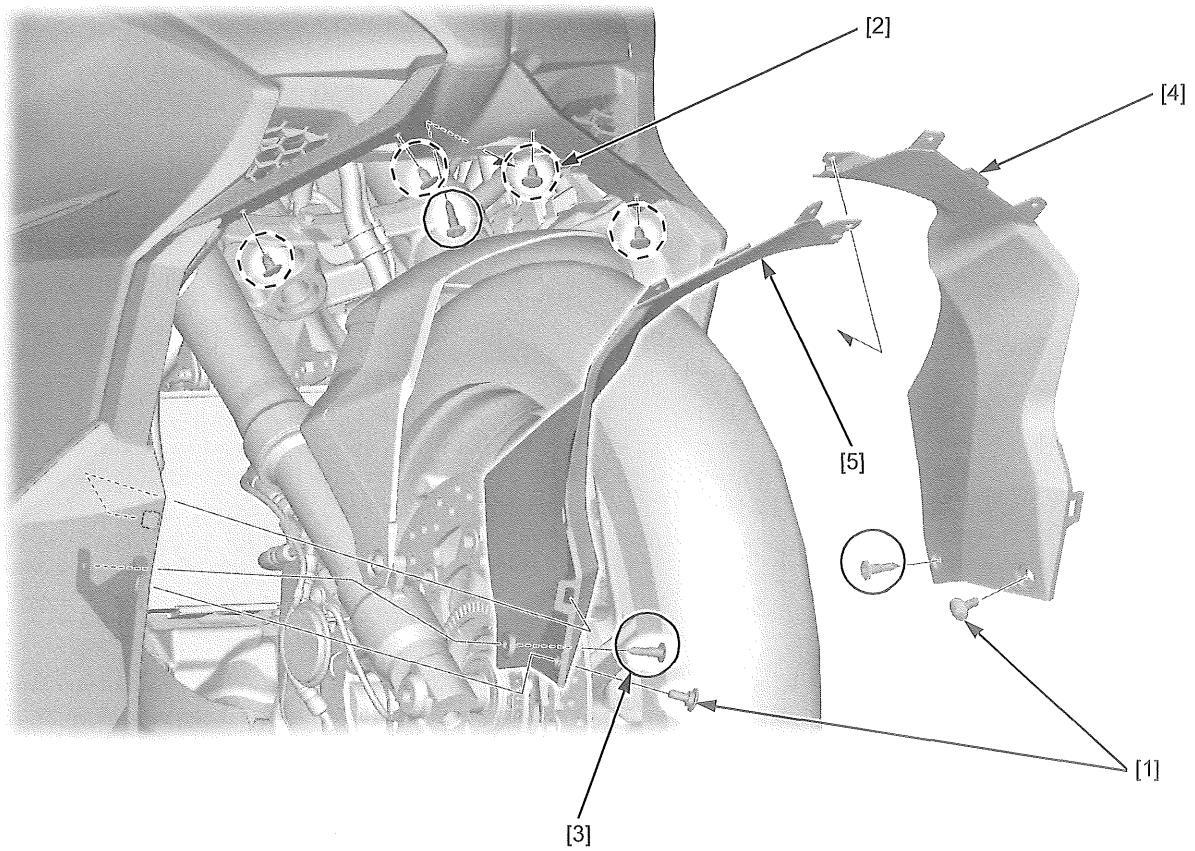

HANDLE UPPER CENTER COVER

REMOVAL/INSTALLATION

Remove the socket bolt [1] and handle upper center cover [2].

Installation is in the reverse order of removal.

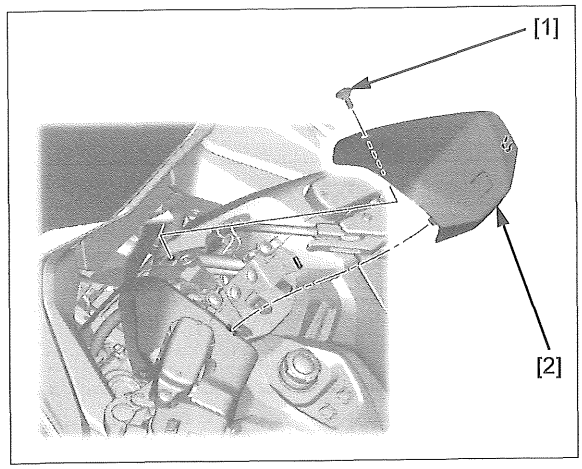

HANDLE FRONT COVER

REMOVAL/INSTALLATION

Remove the handle upper center cover (page 2-8).

Remove the socket bolts [1], clips [2] and right handle front cover [3].

Release the parking brake switch 2P (Black) connector [4] and remove the left handle front cover [5].

Installation is in the reverse order of removal.

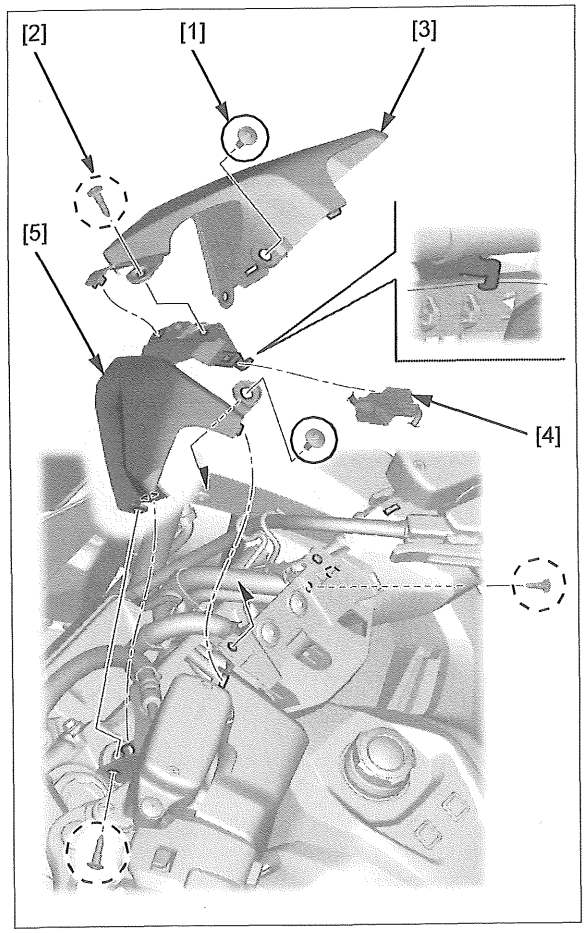

HANDLE REAR COVER

REMOVAL/INSTALLATION

Remove the handle front cover (page 2-8).

Remove the socket bolts [1] and handle rear cover [2].

Installation is in the reverse order of removal.

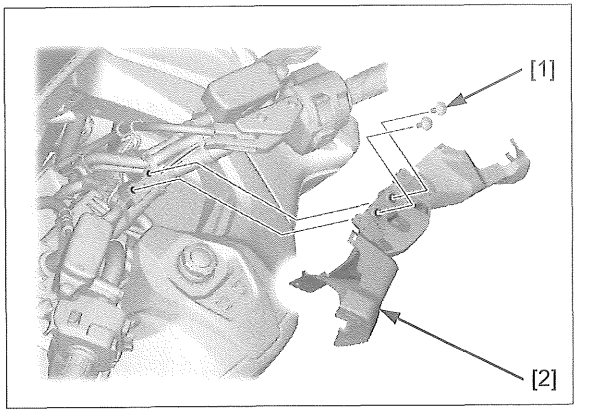

INNER COWL/INNER CENTER COWL/ FRONT INNER COWL

REMOVAL/INSTALLATION

Remove the socket bolts [1] and clips [2].

Disconnect the ignition switch 4P (Black) connector [3] and seat open/fuel lid open switch [4] and remove the cover assembly [5].

Installation is in the reverse order of removal.

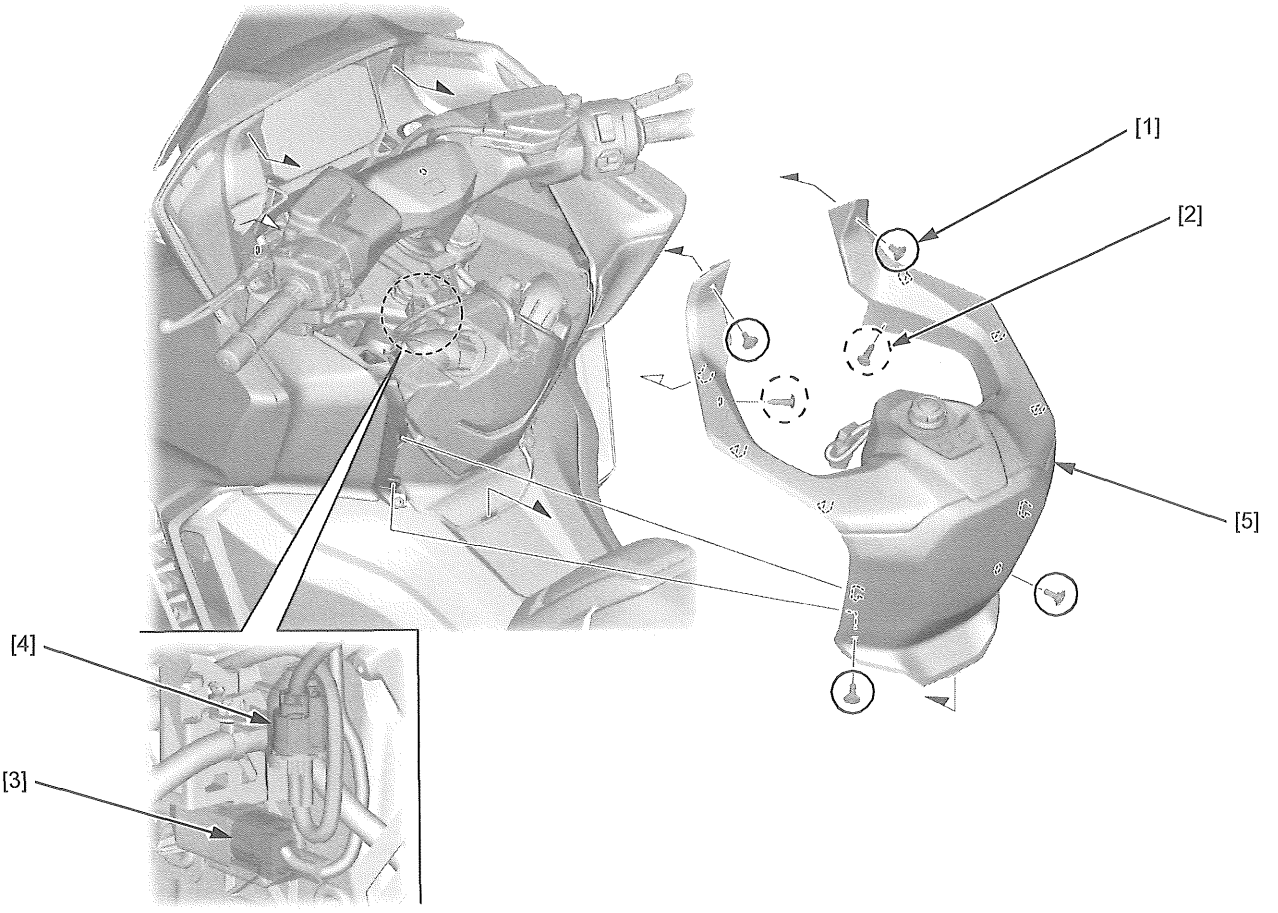

DISASSEMBLY/ASSEMBLY

Remove the clip [1], inner cover [2] and front inner cover [3].

Remove the socket bolts [4] and ignition switch [5].

Remove the clips [6] and inner center cover [7].

Remove the screws [8], fuel lid open switch [9] and seat open switch (white tape) [10] from the front inner cover [11].

Assembly is in the reverse order of disassembly.

TORQUE:

Fuel lid open switch screw:
1.5 N·m (0.2 kgf·m, 1.1 lbf·ft)

Seat open switch screw:
1.5 N·m (0.2 kgf·m, 1.1 lbf·ft)

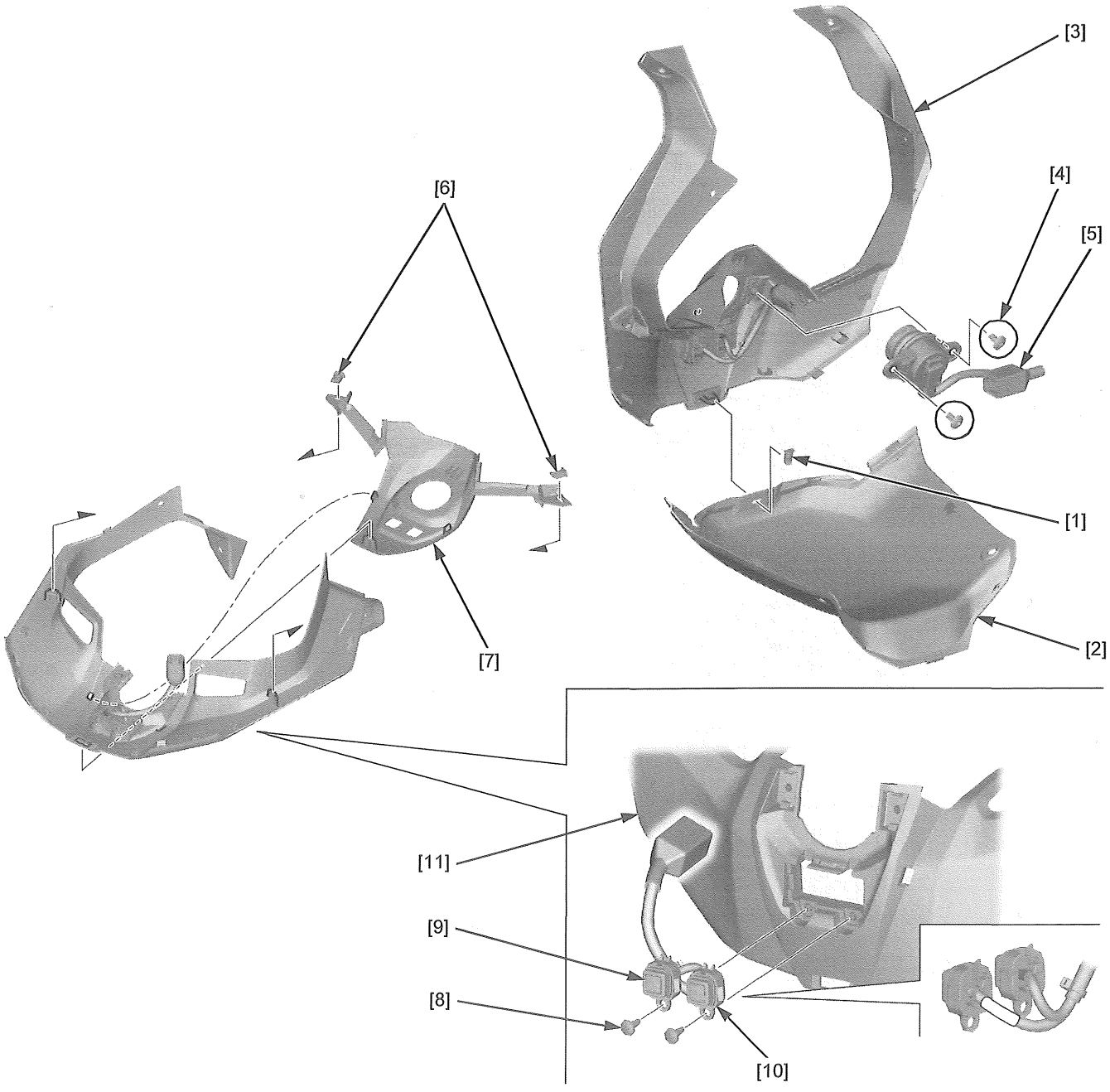

INNER COVER

REMOVAL/INSTALLATION

Remove the inner cowl/inner center cowl/front inner cowl (page 2-9).

Remove the clips [1] and inner cover [2].

Installation is in the reverse order of removal.

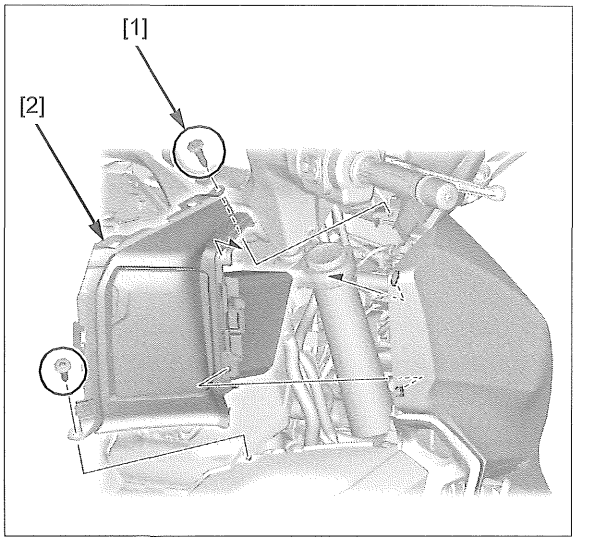

DISASSEMBLY/ASSEMBLY

Right side only: Remove the screws [1], front pocket [2], pocket lid [3] from left side duct panel [4].

Assembly is in the reverse order of disassembly.

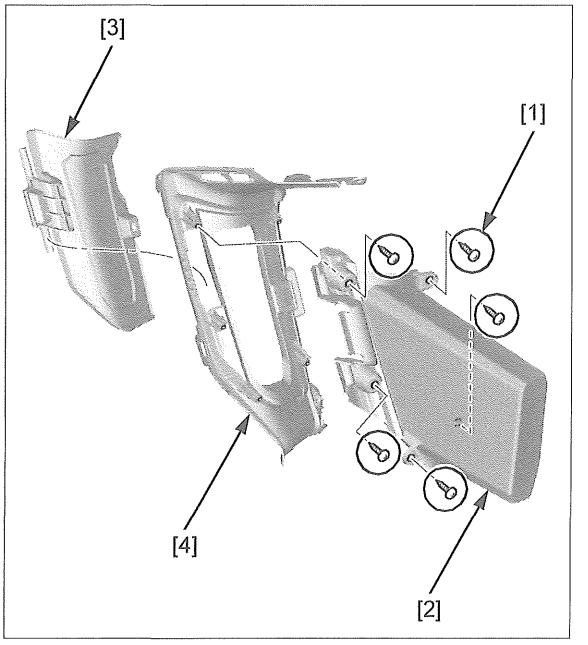

HOLDER METER COVER

REMOVAL/INSTALLATION

Remove the inner cowl/inner center cowl/front inner cowl (page 2-9).

Disconnect the combination meter 24P (Gray) connector [1].

Remove the socket bolts [2] and holder meter cover [3].

Installation is in the reverse order of removal.

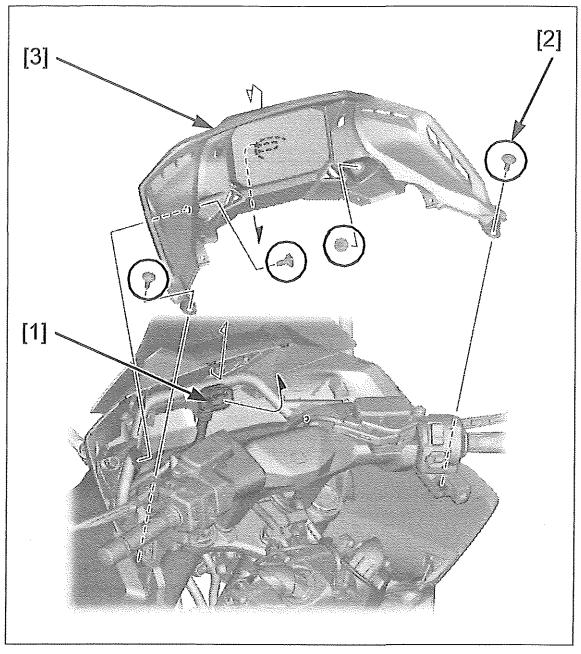

DISASSEMBLY/ASSEMBLY

Remove the screws [1], combination meter [2] and grommet [3] from holder meter cover [4].

Assembly is in the reverse order of disassembly.

TORQUE: 1.0 N·m (0.1 kgf·m, 0.7 lbf·ft)

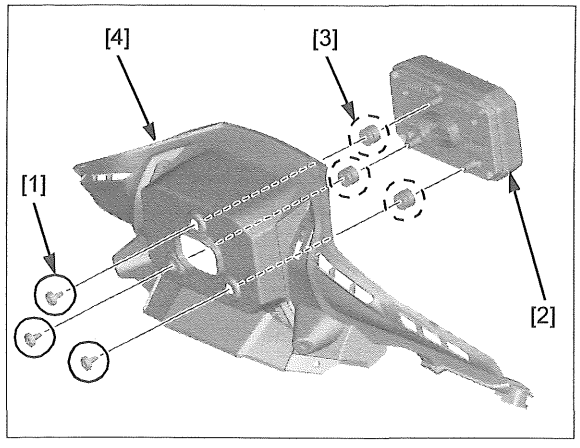

FRONT LOWER COVER

REMOVAL/INSTALLATION

Remove the socket bolts [1], clips [2] and front lower cover [3].

Release the wire clamp [4] and remove the wire clamp from the stay [5].

Installation is in the reverse order of removal.

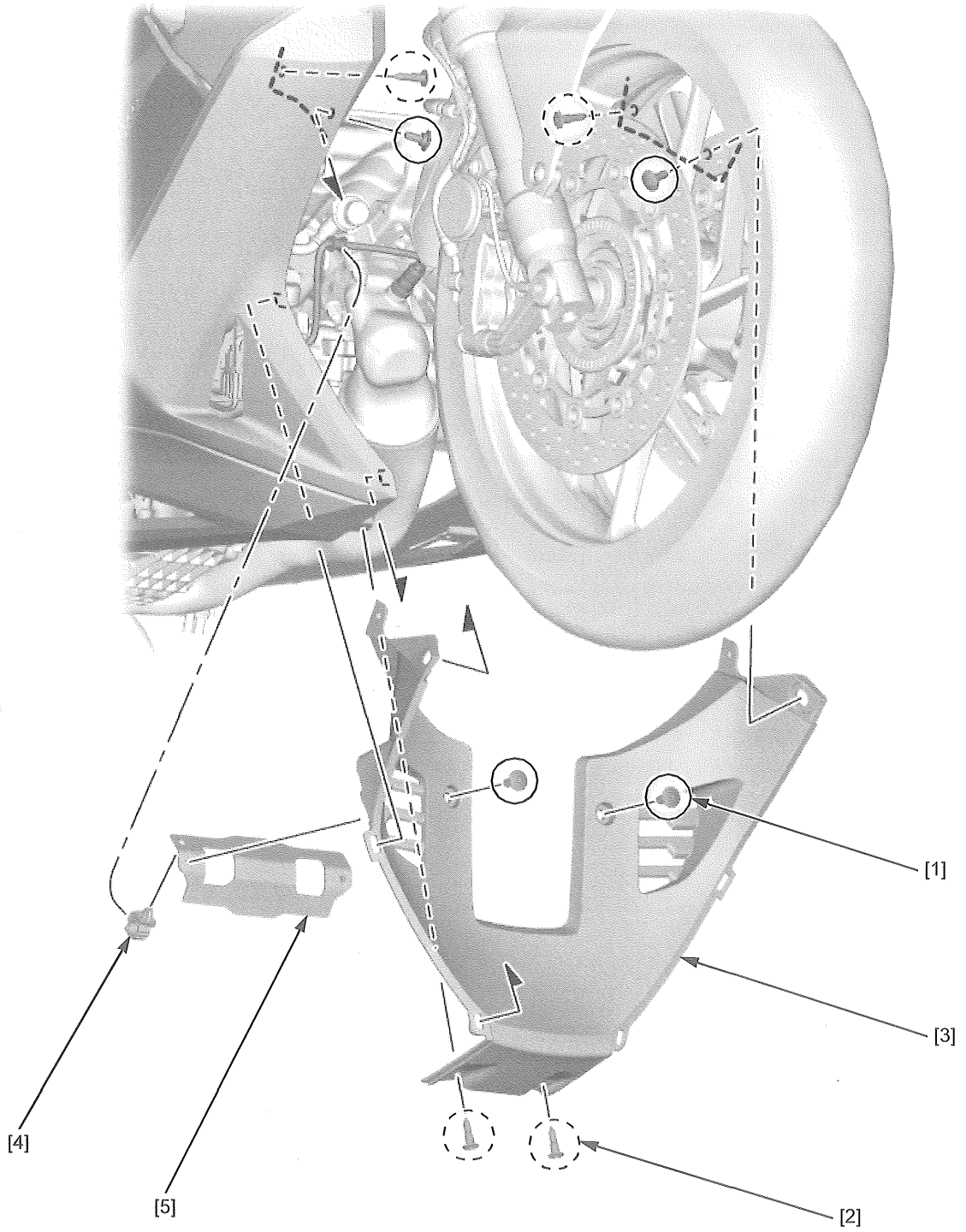

FLOOR SKIRT/FLOOR STEP

REMOVAL/INSTALLATION

Remove the following:

- Front lower cover (page 2-13)
- Floor mat A [1]
- Floor mat B [2]
- Socket bolts [3]
- Flange bolts [4]/collars [5]/grommet [6]
- Clip [7]
- Flange bolt [8]

Release the boss from the grommet and remove the floor skirt/floor step [9].

Installation is in the reverse order of removal.

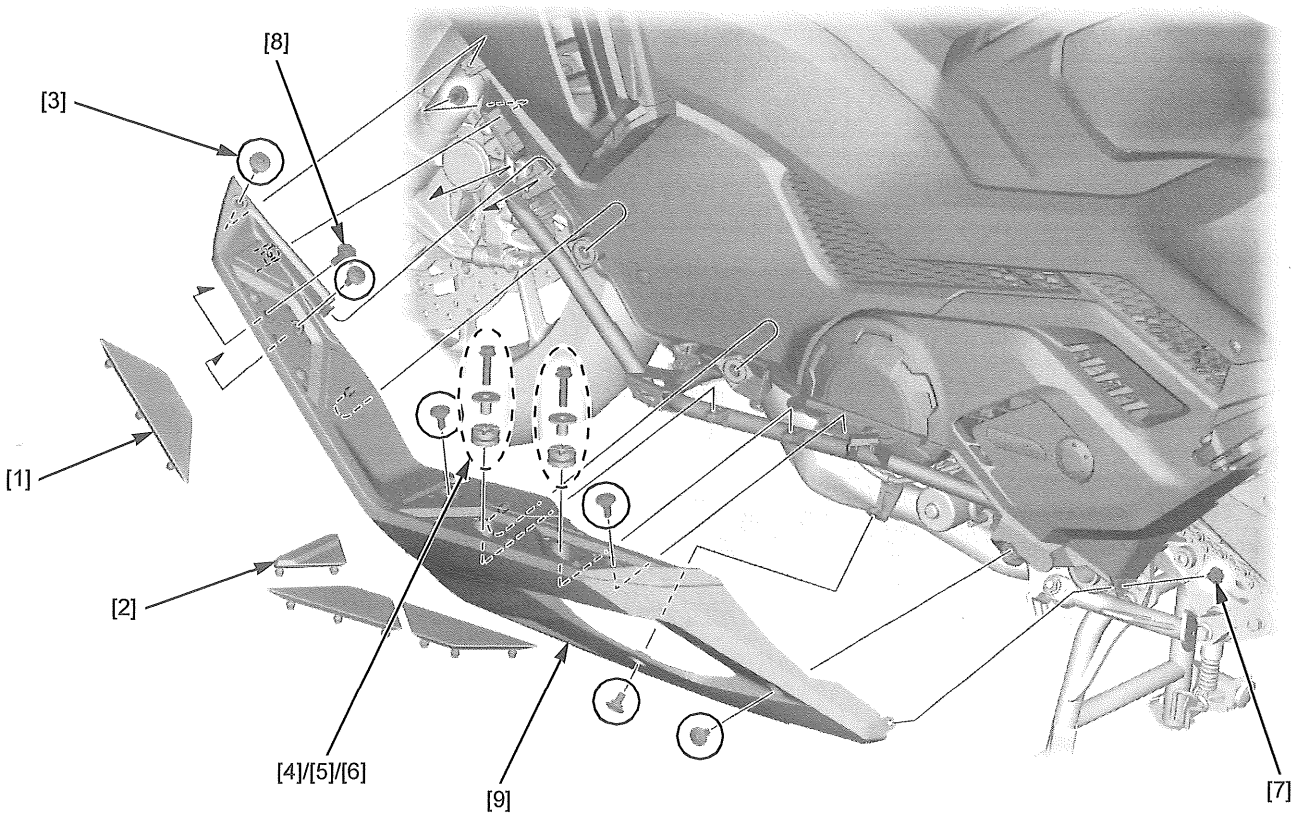

DISASSEMBLY/ASSEMBLY

Remove the socket bolts [1].

Remove the floor step [2] from the floor skirt [3].

Assembly is in the reverse order of disassembly.

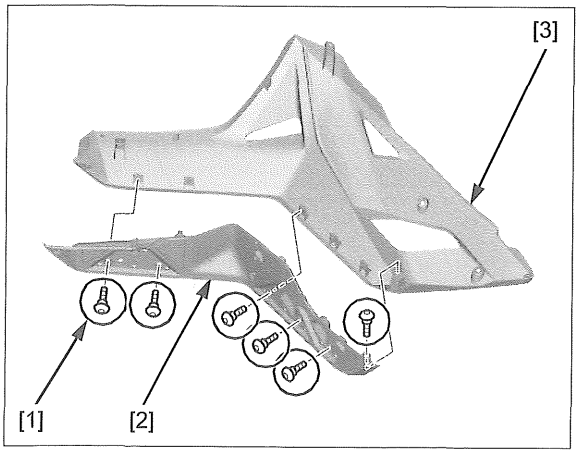

FRONT SIDE COWL

REMOVAL/INSTALLATION

Remove the following:

- Floor step/floor skirt (page 2-14)
- Inner panel (page 2-7).
- Inner cover (page 2-11).
- Socket bolts [1]
- Clip [2]
- Front side cowl [3]

Disconnect the turn signal light 2P connector [4].

Installation is in the reverse order of removal.

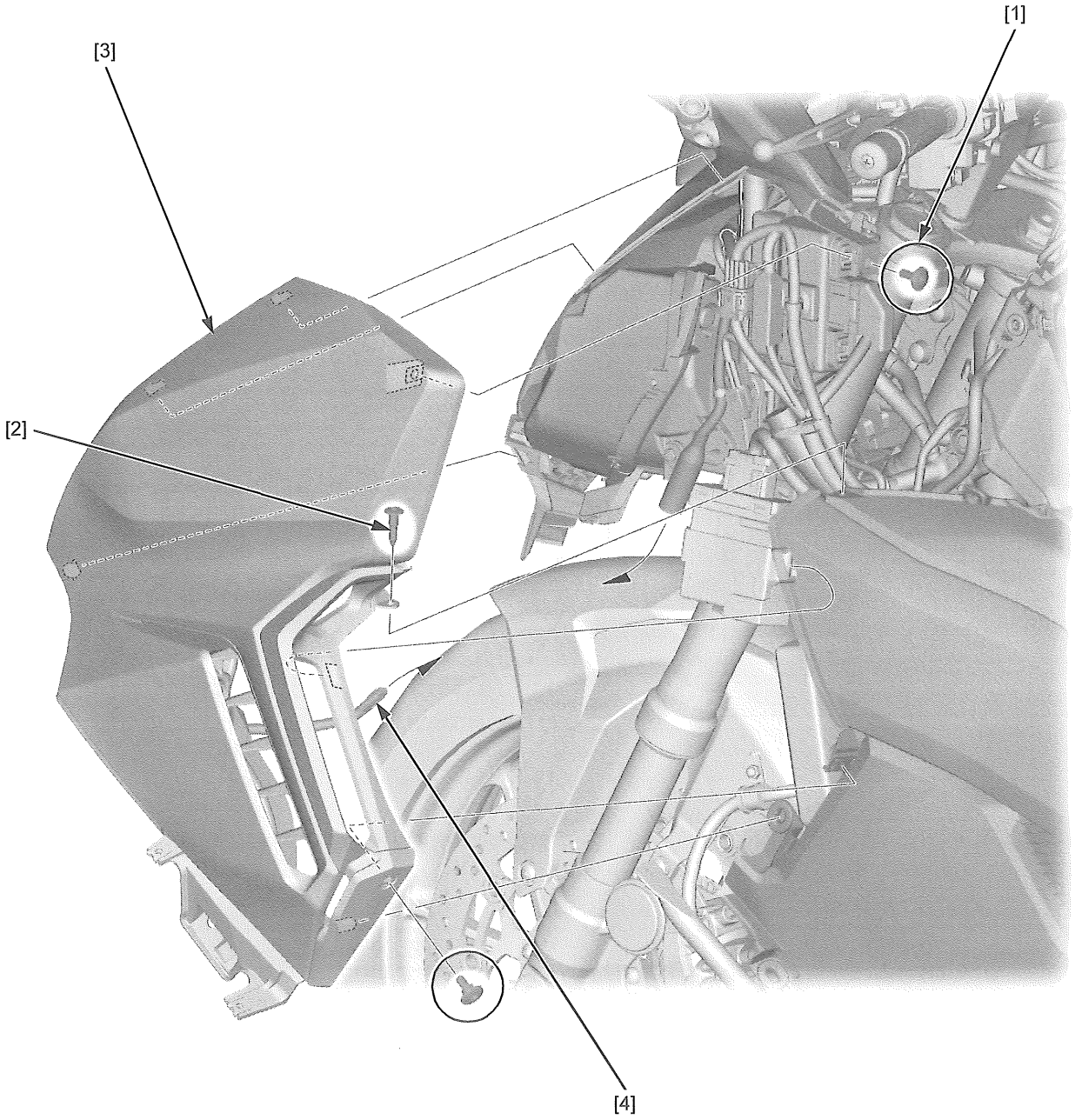

DISASSEMBLY/ASSEMBLY

Remove the following:

- Screws [1]
- Turn signal light [2]
- Screws [3]
- Side duct cover [4]
- Screw [5]
- Side duct panel [6]
- Front side cowl [7]

Assembly is in the reverse order of disassembly.

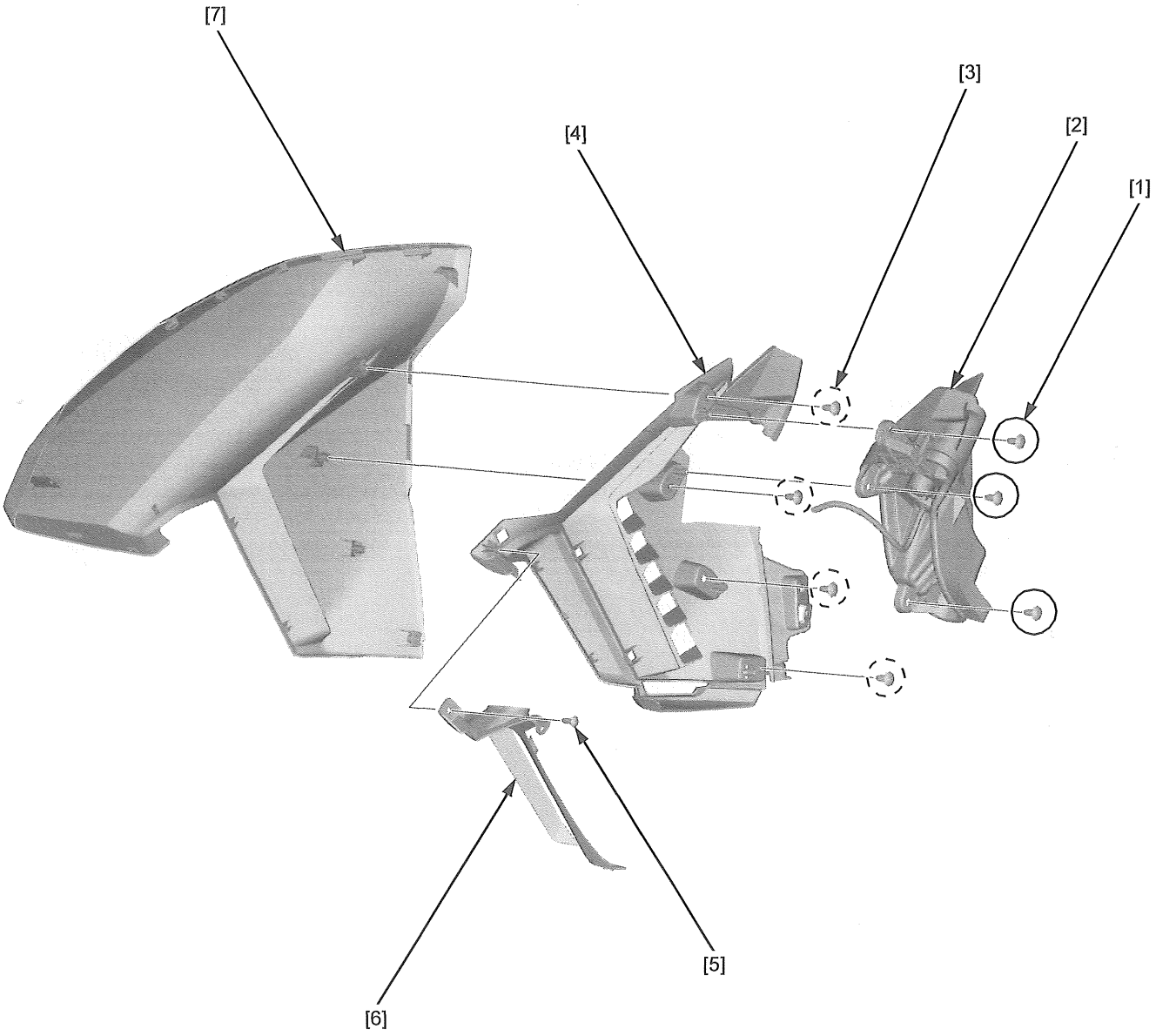

UPPER METER COVER/FRONT COWL/ AIR INTAKE COVER

REMOVAL/INSTALLATION

Remove the following:

- Windscreen (page 2-5)
- Rearview mirrors (page 2-5)
- Front side cowls (page 2-15)
- Holder meter cover (page 2-12)
- Open air temperature sensor (page 21-13)
- Socket bolts [1]
- Rubber cover [2]
- Air intake cover/upper meter cover/front cowl [3]

Installation is in the reverse order of removal.

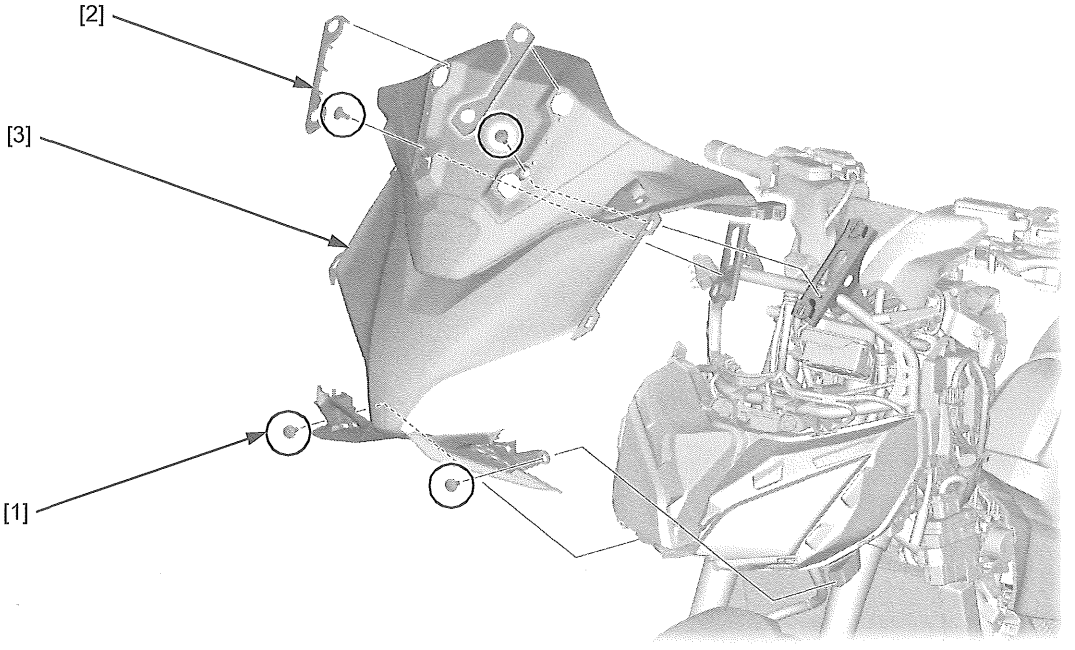

DISASSEMBLY/ASSEMBLY

Remove the screws [1] and upper meter cover [2] from the front cowl [3].

Remove the screw [4] and air intake cover [5] from the front cowl.

Assembly is in the reverse order of disassembly.

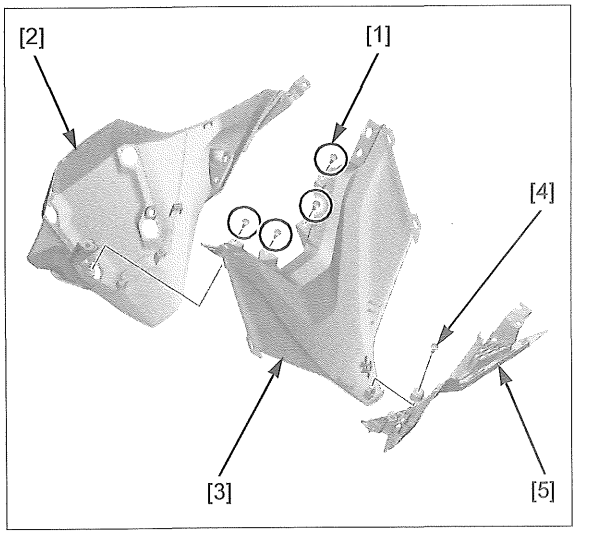

STEP PANEL/SIDE PANEL

REMOVAL/INSTALLATION

LEFT SIDE:

Remove the following:

- Front side cowl (page 2-15)
- Rear cowl (page 2-25)
- Clips [1]
- Socket bolts [2]
- Step panel/side panel [3]

Installation is in the reverse order of removal.

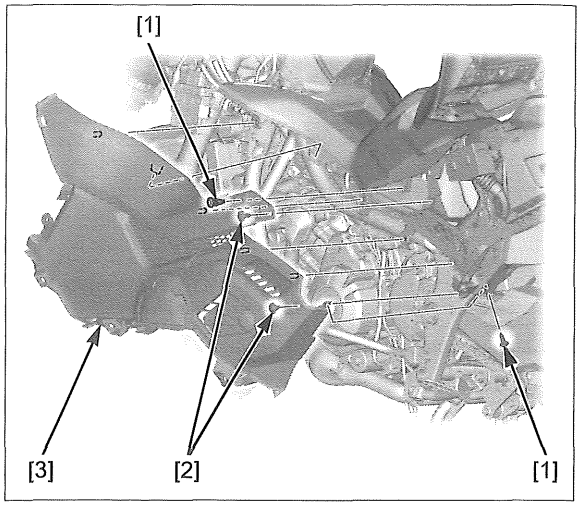

RIGHT SIDE:

Remove the following:

- Front side cowl (page 2-15)
- Rear cowl (page 2-25)
- Clip [1]
- Socket bolts [2]
- Step panel/side panel [3]

Installation is in the reverse order of removal.

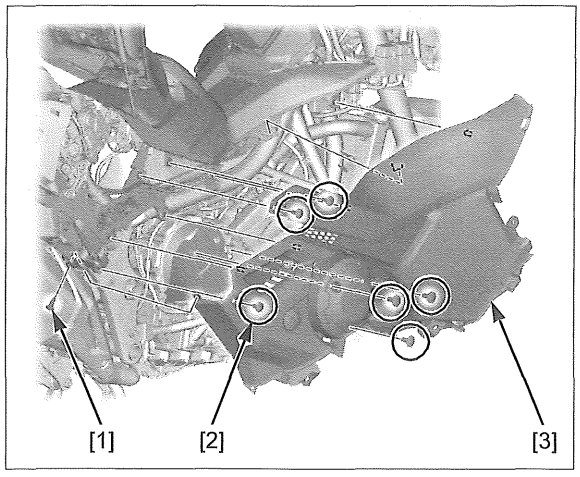

DISASSEMBLY/ASSEMBLY

LEFT SIDE:

Remove the following:

- Screws [1]
- Side panel [2]
- Screws [3]
- Pivot lower cover [4]
- Screw [5]
- Clips [6]
- Pivot cover [7]
- Step panel [8]

Assembly is in the reverse order of disassembly.

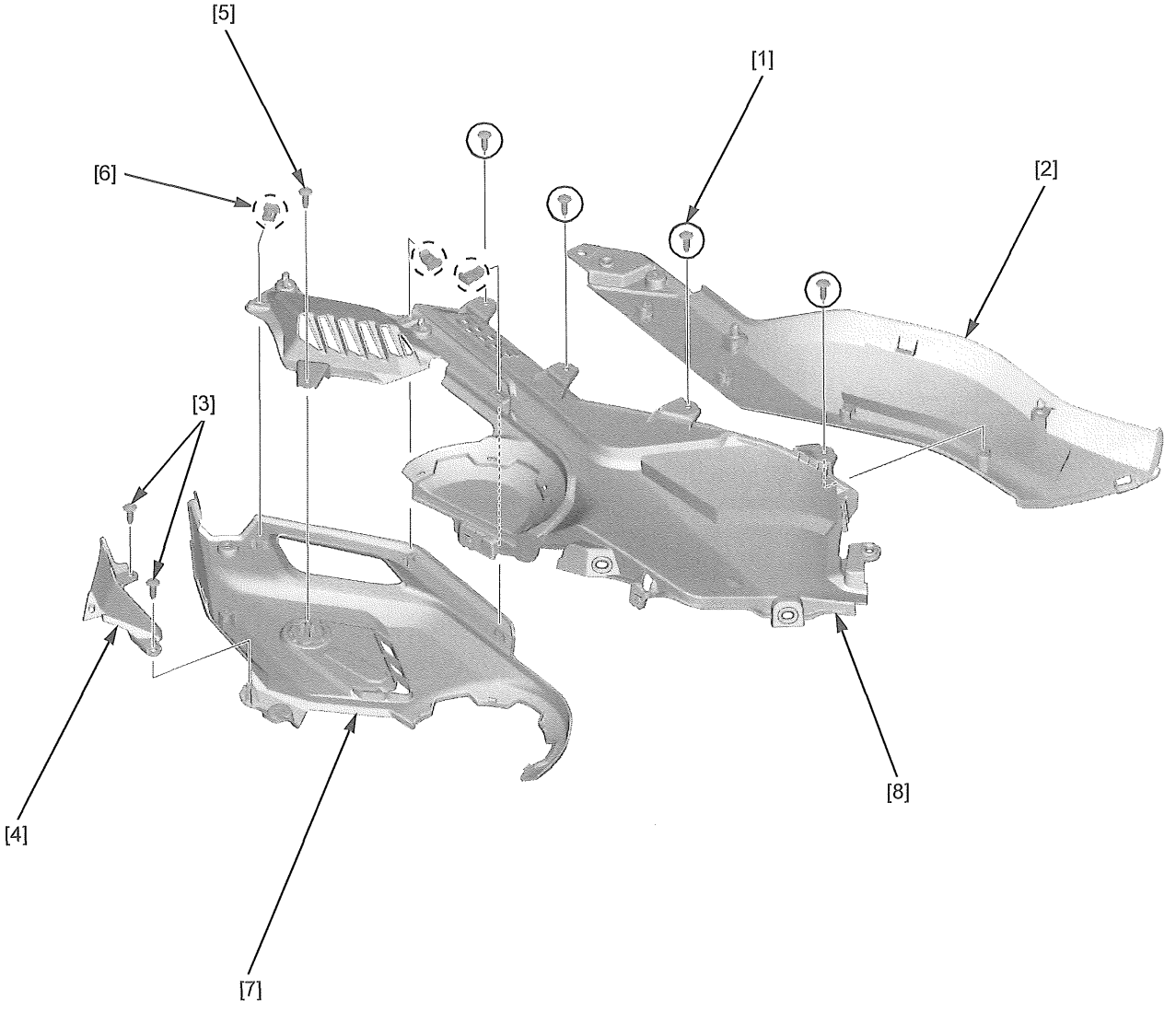

RIGHT SIDE:

Remove the following:

- Screws [1]
- Side panel [2]
- Screws [3]
- Pivot lower cover [4]
- Screw [5]
- Clips [6]
- Pivot cover [7]
- Step panel [8]
- Right engine center cover [9]

Assembly is in the reverse order of disassembly.

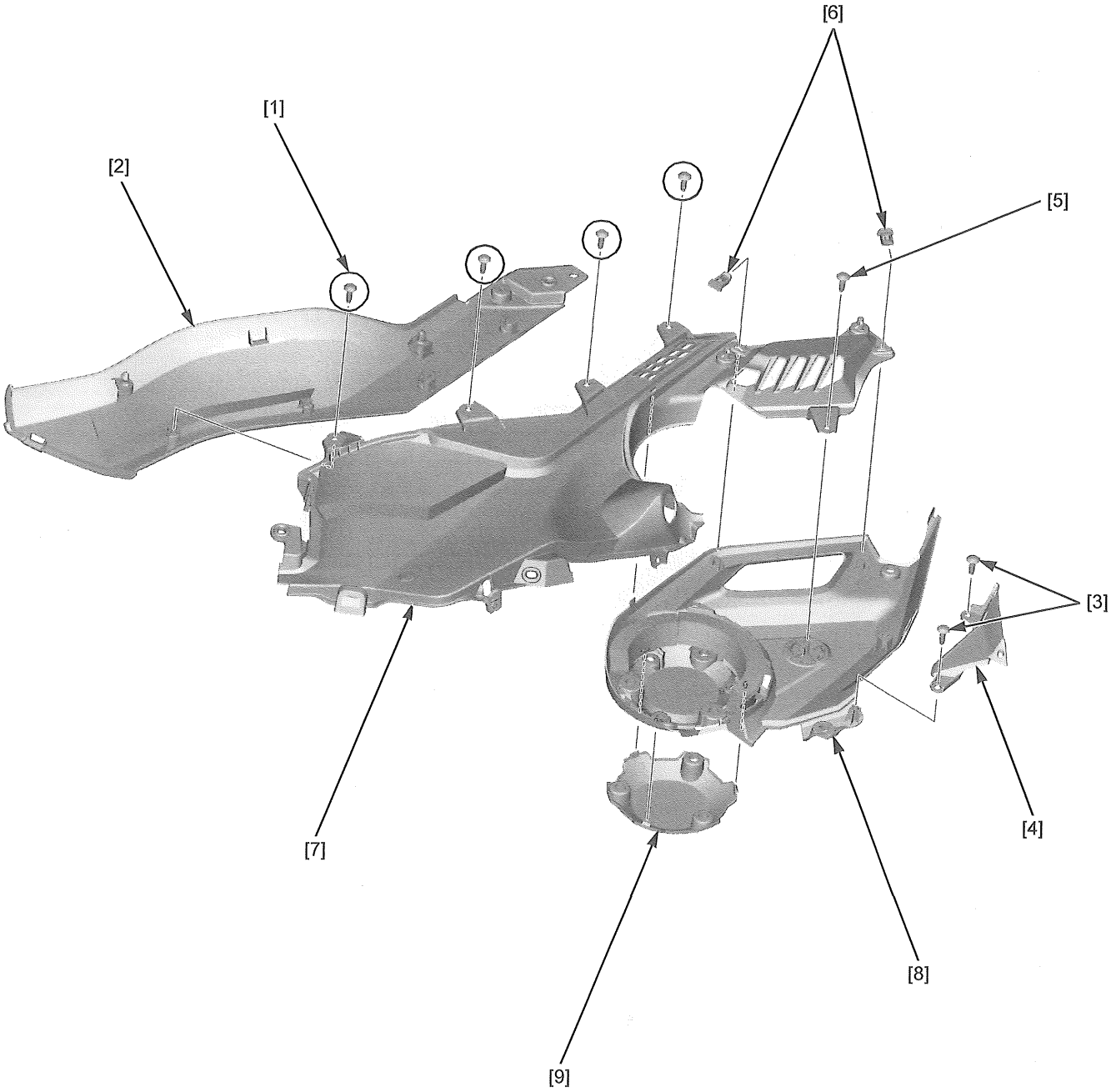

CENTER LOWER COVER

REMOVAL/INSTALLATION

Remove the following:

- Step panel/side panels (page 2-18)
- Socket bolts [1]
- Clip [2]
- Center lower cover [3]

Installation is in the reverse order of removal.

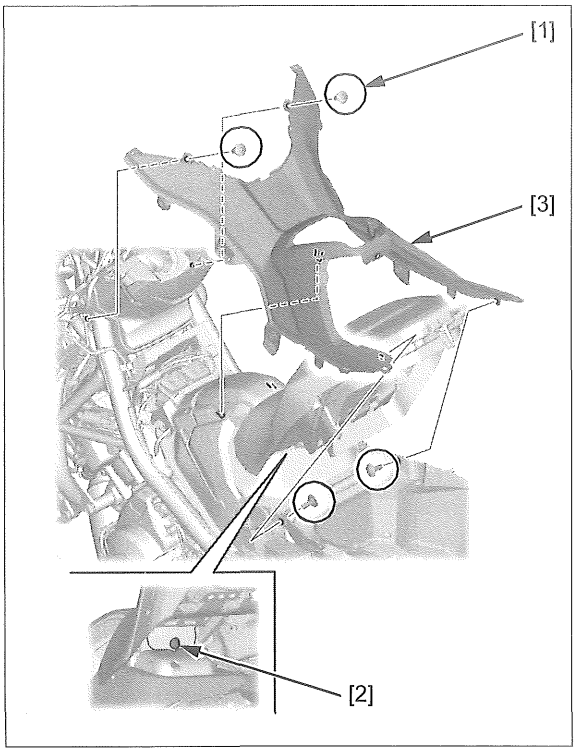

LUGGAGE BOX COVER

REMOVAL/INSTALLATION

Remove the following:

- Step panel/side panel (page 2-18)
- Rear fender B (page 2-30)
- Socket bolts [1]
- Clip [2]
- Luggage box cover [3]

Installation is in the reverse order of removal.

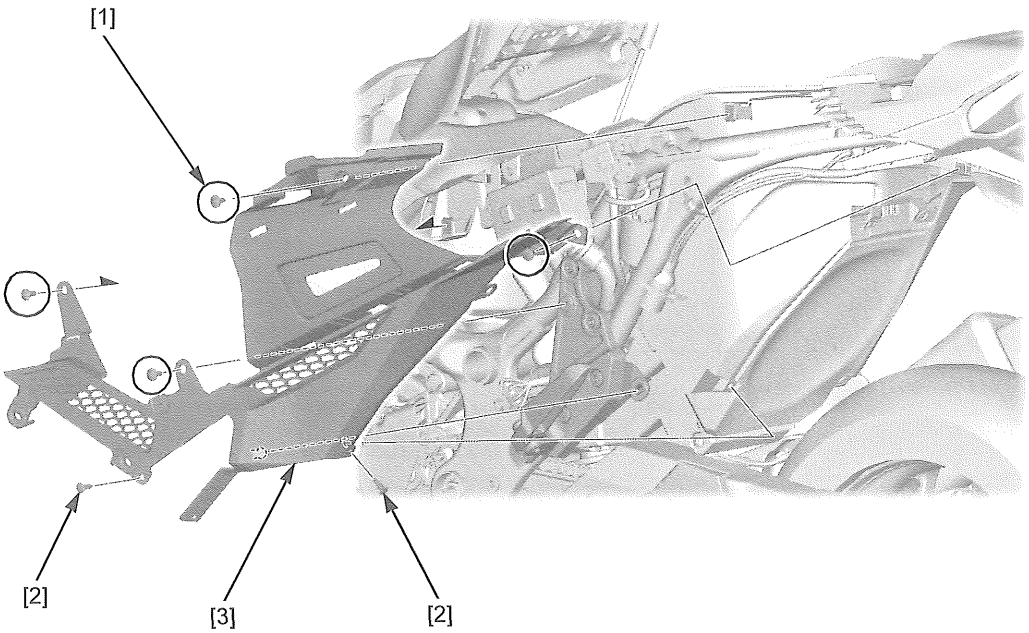

FUEL LID BRACKET

REMOVAL/INSTALLATION

Remove the following:

- Seat (page 2-32)
- Luggage box covers (page 2-21)
- Fuel lid lock cable (page 22-21)

Disconnect the fuel tray drain hose [1] and fuel tank breather hose [2].

Pull the connector tab and remove the junction connectors [3] from the fuel lid bracket.

Remove the fuel filler cap [4], flange bolts [5], socket bolts [6] and fuel lid bracket [7].

Remove the special nuts [8].

Installation is in the reverse order of removal.

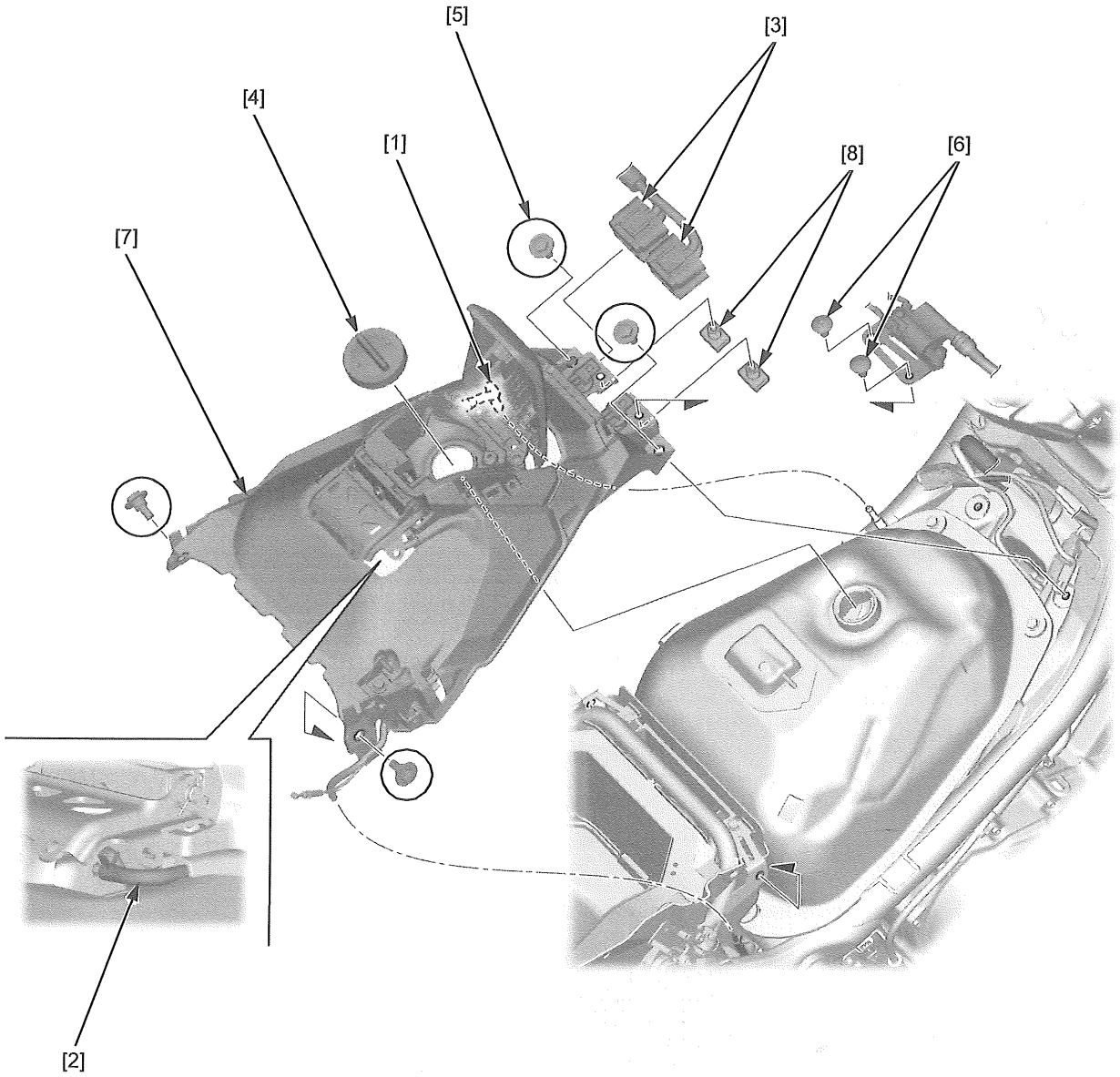

DISASSEMBLY/ASSEMBLY

Remove the screws [1], fuel lid hinge [2] and fuel lid [3] from the fuel lid bracket [4].

Remove the pin [5], washer [6], seat hinge shaft [7] and seat hinge [8].

Remove the clip [9], screw [10] and fuel lid lock cover [11].

Remove the fuel tank breather hose [12] and fuel lid lock cable [13].

Remove the screws [14], fuel lid cams [15] and spring [16].

Remove the fuel tray [17].

Remove the flange bolt [18], seat damper stay [19] and special nut [20].

Remove the connector clips [21].

Assembly is in the reverse order of disassembly.

Route the wire harness properly (page 1-20).

NOTE:

- Apply Honda Bond A or equivalent to the special nut.

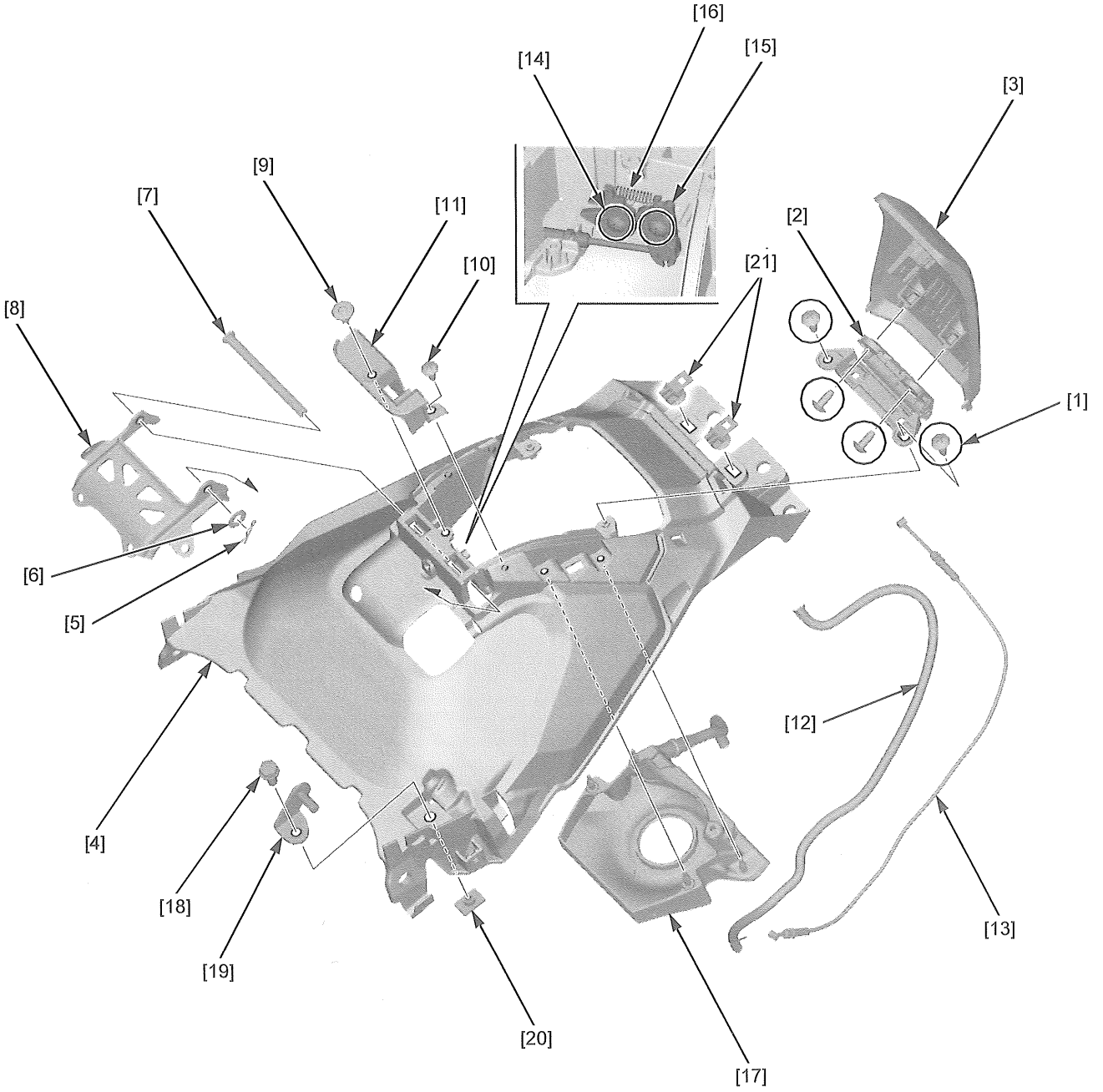

HEAT GUARD

REMOVAL/INSTALLATION

Remove the canister (page 7-16).

Remove the EVAP purge control solenoid valve (page 7-15).

Disconnect the following:

- Rear wheel speed sensor 2P (Black) connector [1]
- Linear solenoid 4P (Black) connector [2]
- No.2 ignition coil connectors [3]

Remove the following:

- Bolts [4], spacers [5], No.2 ignition coil [6], Stay [7]
- Harness clip [8]
- Clip [9]
- Heat guard [10]
- Rear wheel speed sensor 2P (Black) connector clip [11]
- Linear solenoid 4P (Black) connector clip [12]

Remove the following through the heat guard holes:

- No.2 ignition coil
- Fuel feed hose [13]
- Fuel pump connector [14]

Installation is in the reverse order of removal.

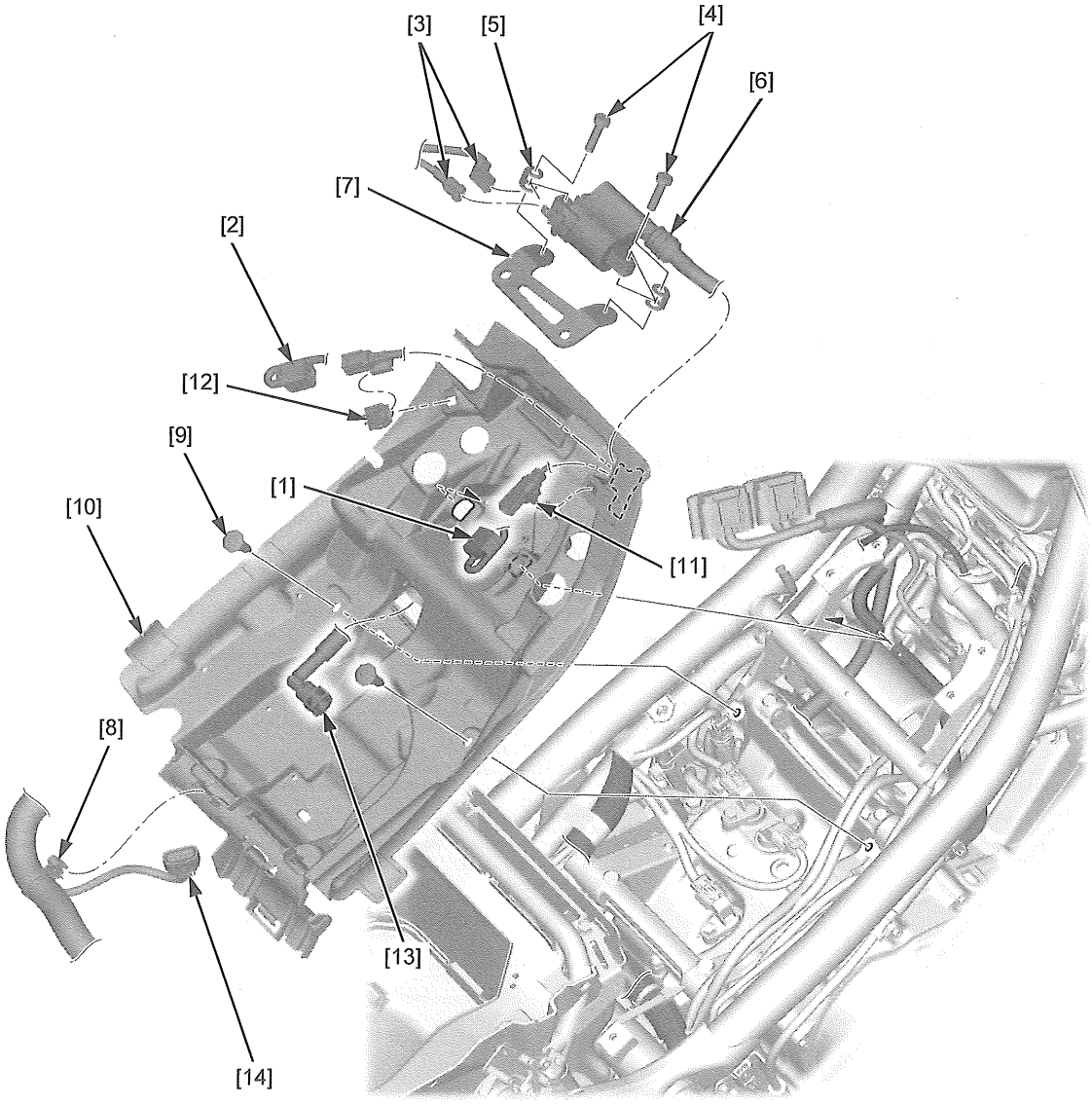

REAR COWL

REMOVAL/INSTALLATION

Remove the following:

- Clips [1]
- Socket bolts [2]
- Rear cowl [3]

Installation is in the reverse order of removal.

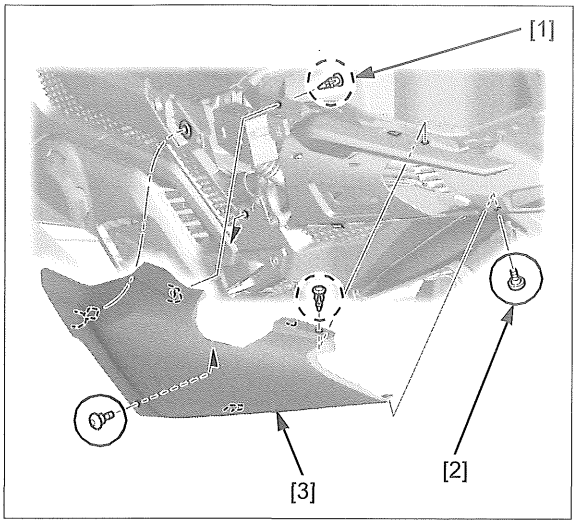

REAR CENTER UPPER COVER

REMOVAL/INSTALLATION

Remove the following:

- Grab rails (page 2-33)
- Luggage box covers (page 2-21)
- Socket bolts [1]
- Rear center upper cover [2]
- Setting nuts [3]

Installation is in the reverse order of removal.

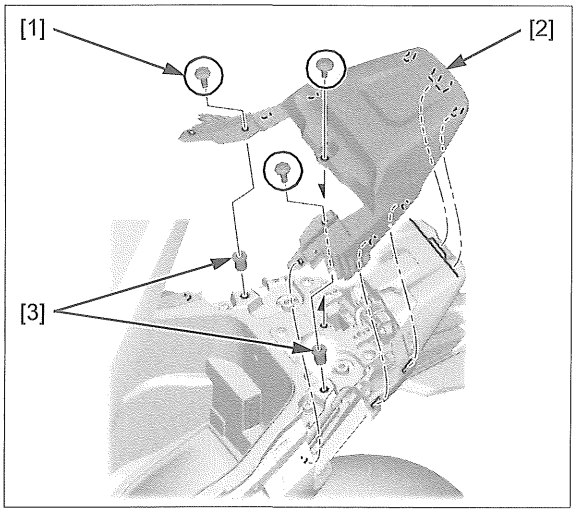

REAR CENTER LOWER COVER

REMOVAL/INSTALLATION

Remove the following:

- Rear center upper cover (page 2-25)
- Socket bolts [1]
- Rear center lower cover [2]

Installation is in the reverse order of removal.

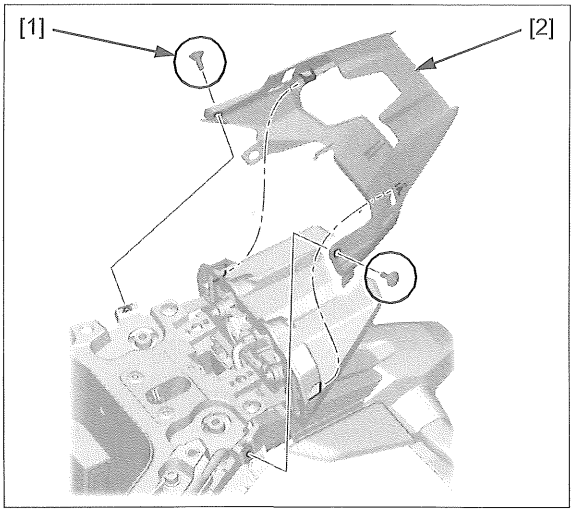

LUGGAGE BOX/BATTERY BOX

REMOVAL/INSTALLATION

Remove the following:

- Luggage box covers (page 2-21)
- Center lower cover (page 2-21)
- Rear fender C (page 2-30)
- Battery (page 20-5)
- Buzzer (page 22-23)
- Brake/taillight (page 21-6)
- Starter relay switch (page 6-7)
- USB charger unit (page 21-21)
- Battery cushion [1]
- Battery negative (–) cable band clip [2]

Release the DLC 6P (Red) connector [3].

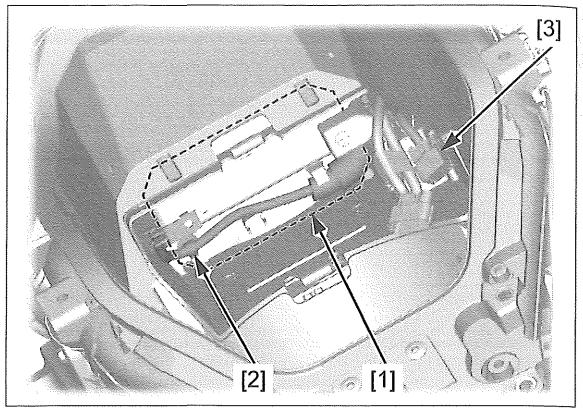

Remove the following:

- Socket bolts [1]
- Socket bolts [2] and collars [3]
- Fuse box [4]
- Luggage box/battery box assembly [5]

Disconnect the luggage box light switch 2P (Gray) connector [6].

Installation is in the reverse order of removal.

Route the cables and wires properly (page 1-20).

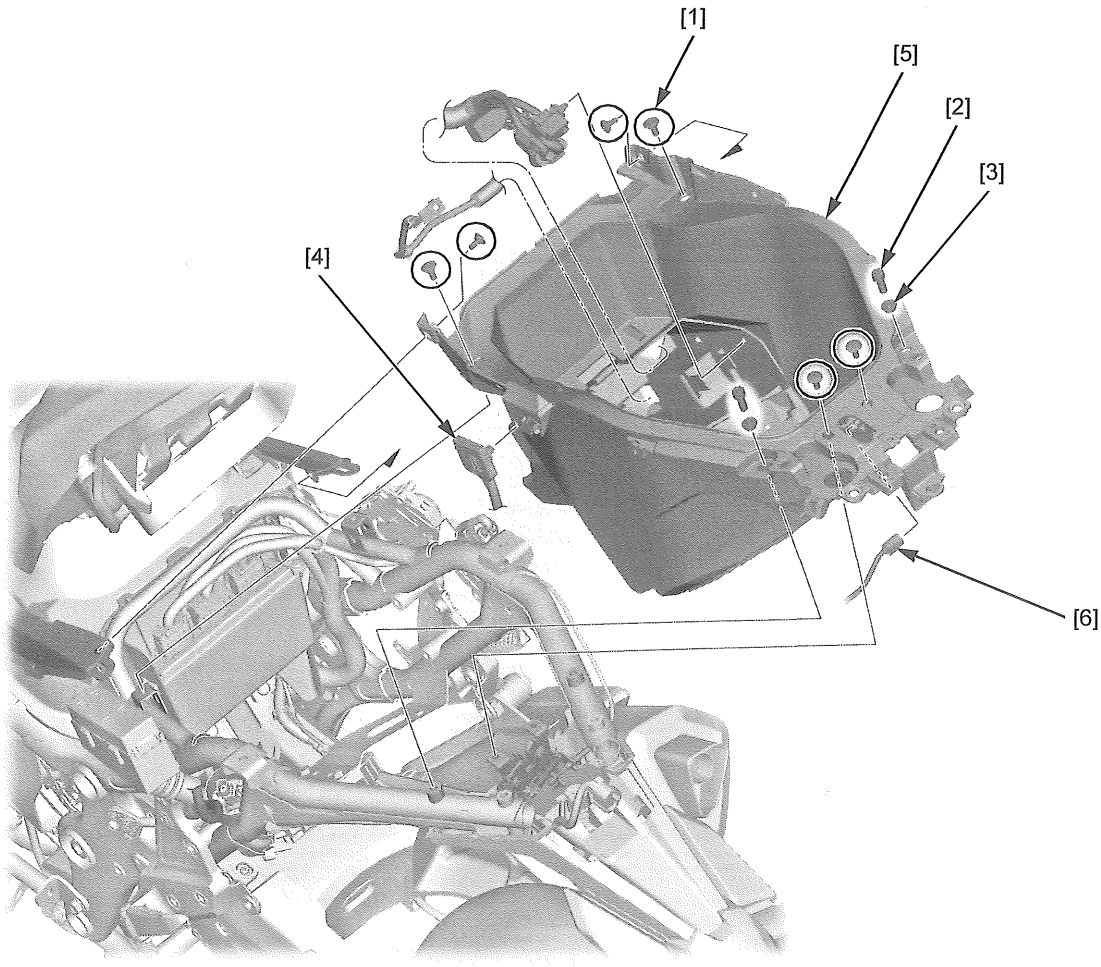

DISASSEMBLY/ASSEMBLY

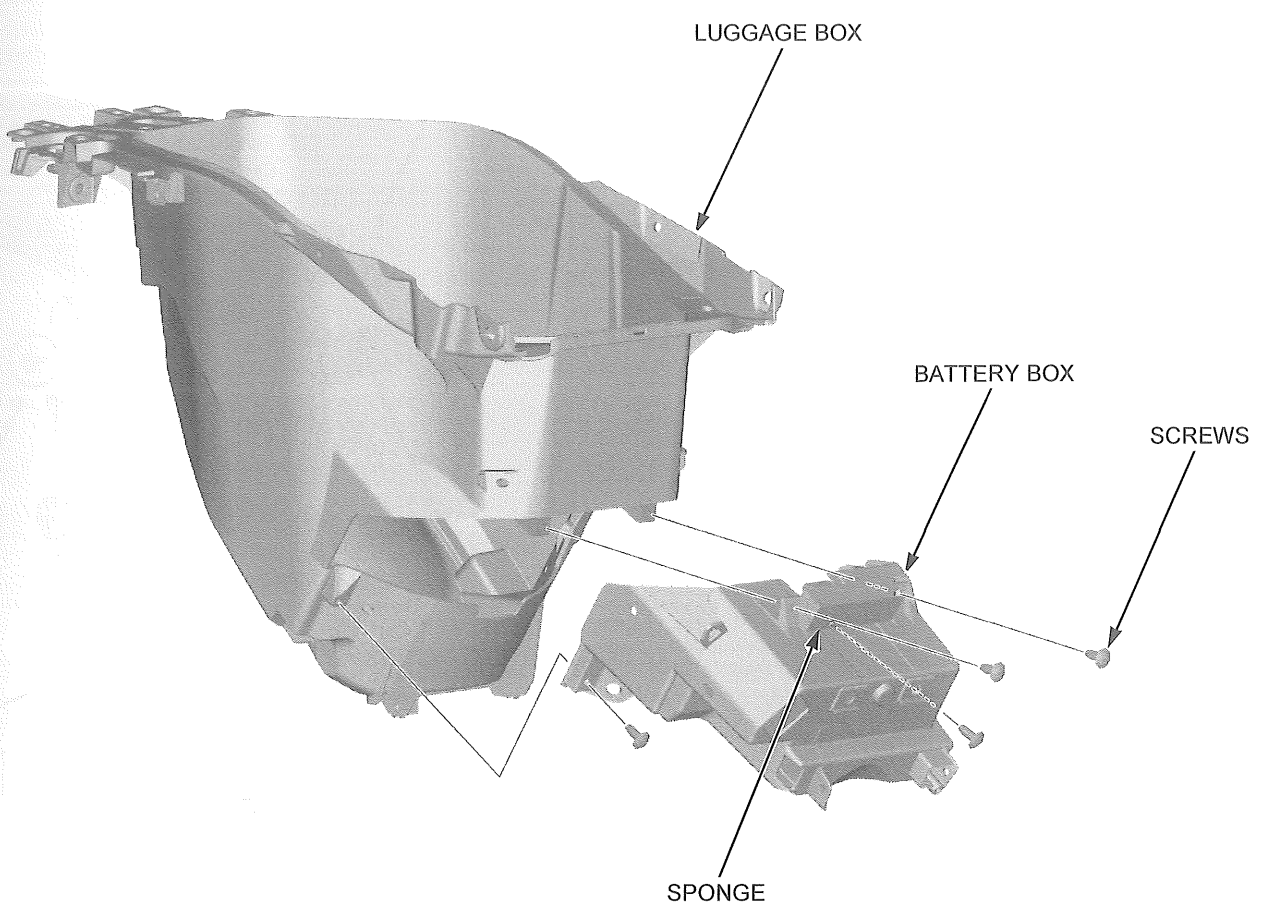

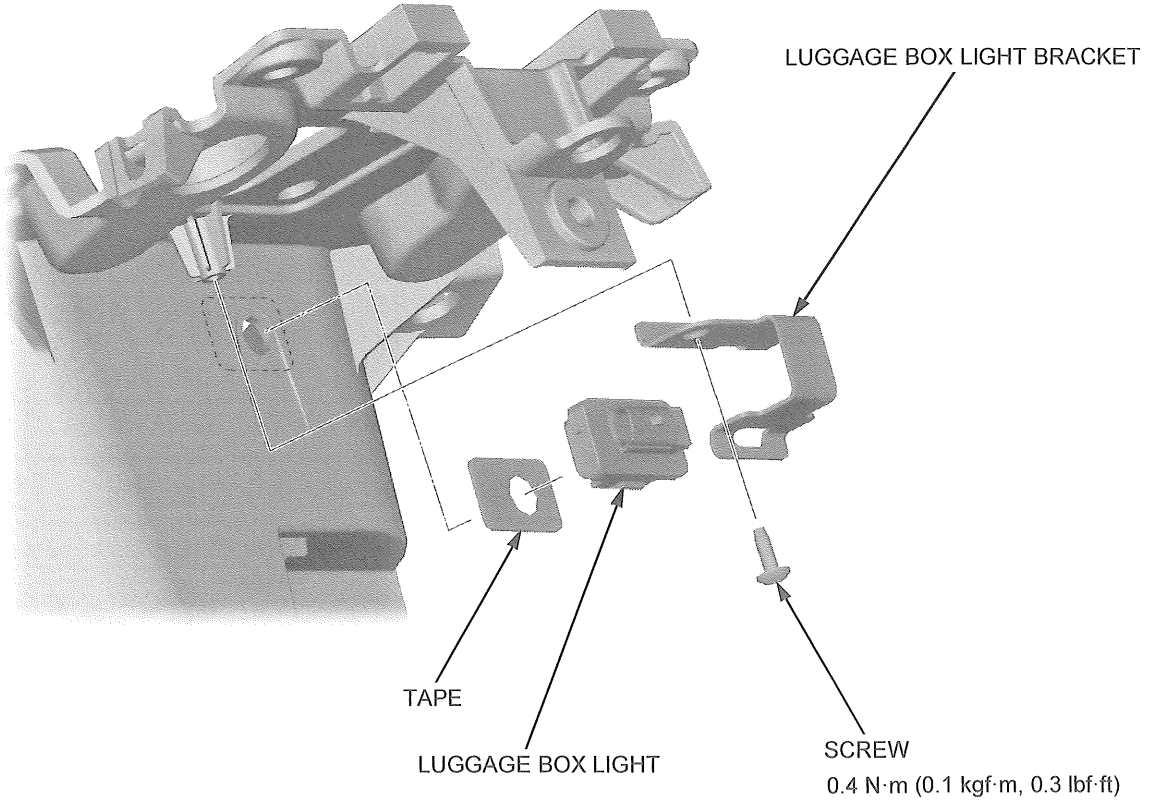

LICENSE LIGHT BRACKET

REMOVAL/INSTALLATION

Remove the following:

- Rear fender B (page 2-30)
- Socket bolts [1]
- Nut [2]
- Reflector [3]
- Collar [4]
- License light bracket [5]

Installation is in the reverse order of removal.

TORQUE:
Reflector nut: 1.7 N·m (0.2 kgf·m, 1.3 lbf·ft)

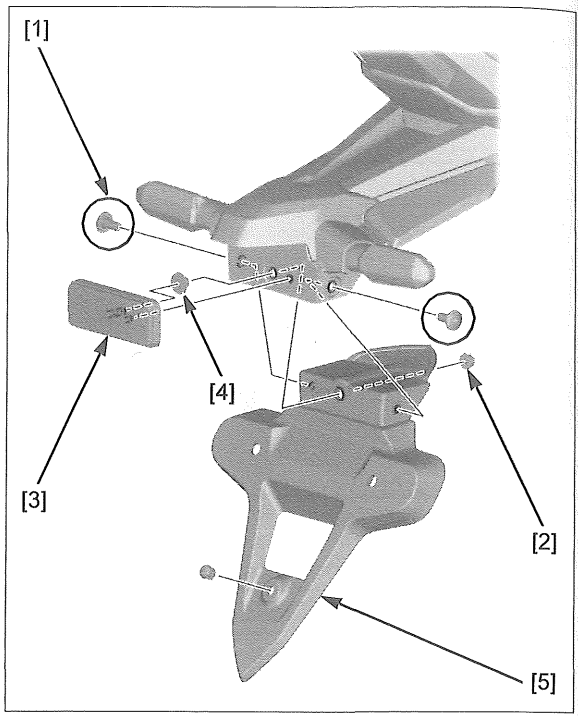

LICENSE LIGHT COVER

REMOVAL/INSTALLATION

Remove the following:

- License light bracket (page 2-28)
- Screws [1]
- License light cover [2]

Disconnect the following:

- Left turn signal 2P (Gray) connector [3]
- Right turn signal 2P (Black) connector [4]

Installation is in the reverse order of removal.

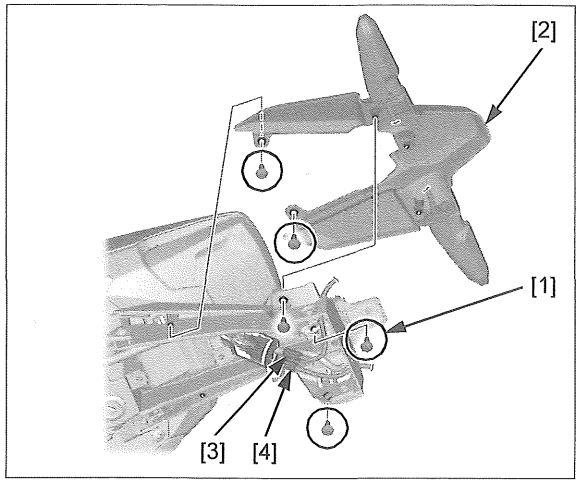

DISASSEMBLY/ASSEMBLY

Remove the bolts [1], washers [2], turn signal lights [3] and grommets [4] from the license light cover [5].

Assembly is in the reverse order of disassembly.

Route the wire harness properly (page 1-20).

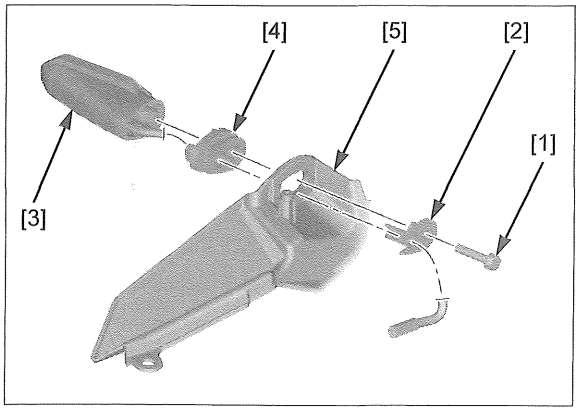

FENDER A STAY

REMOVAL/INSTALLATION

Remove the following:

- License light (page 21-7)
- Wire harness [1]
- Socket bolts [2]
- Washers [3]
- Fender A stay [4]
- Collars [5]
- Lock spring [6]
- Seat lock cylinder [7]
- Stay [8]

Installation is in the reverse order of removal.

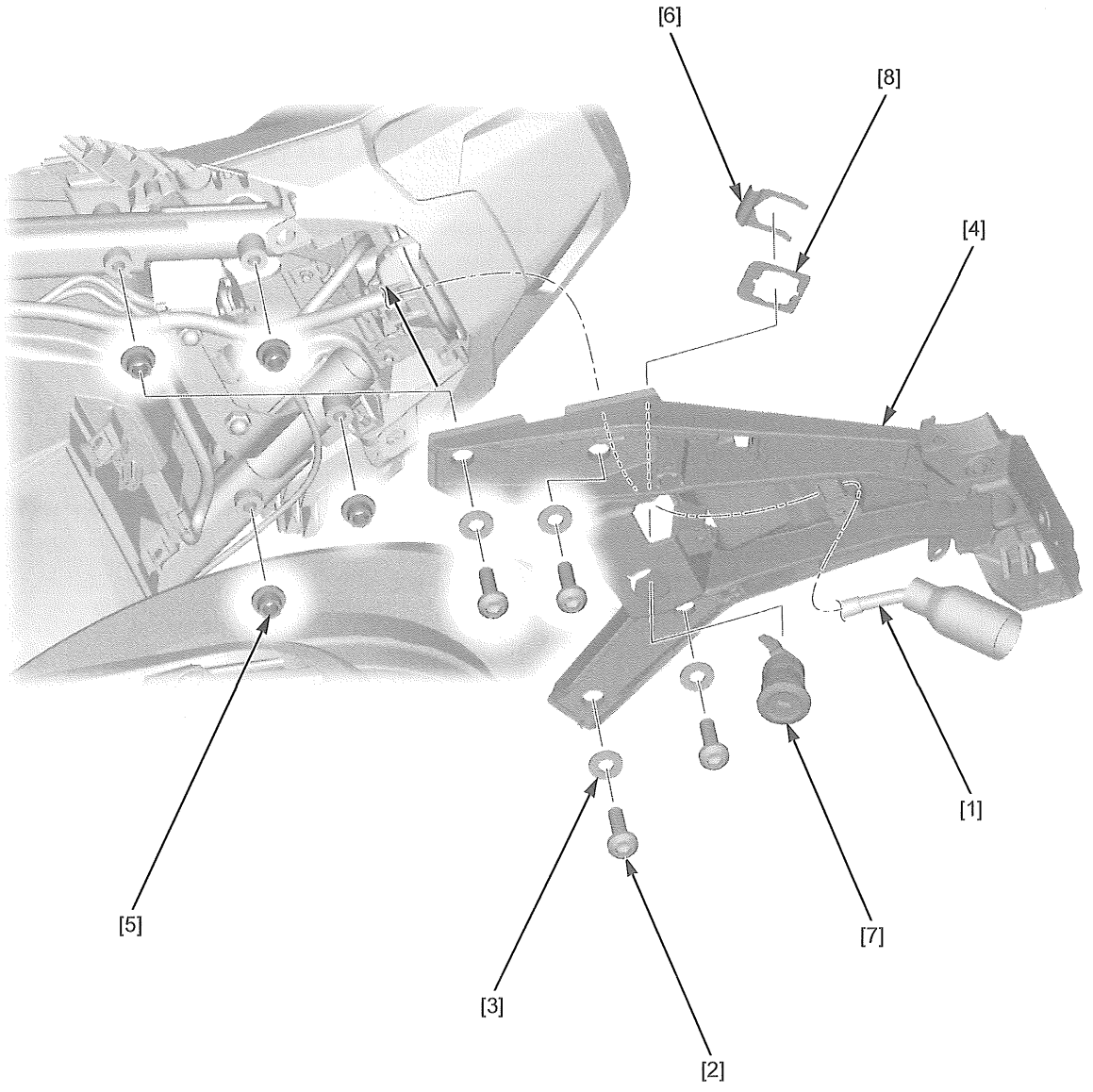

REAR FENDER B

REMOVAL/INSTALLATION

Remove the following:

- Clips [1]
- Socket bolts [2]
- Rear fender B [3]
- Grommet [4]

Installation is in the reverse order of removal.

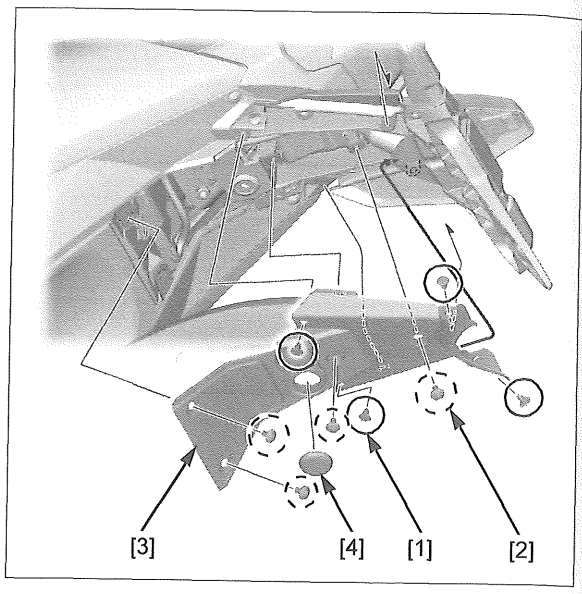

REAR FENDER C

REMOVAL/INSTALLATION

Remove the following:

- Clips [1]
- Socket bolts [2]
- Wire clips [3]
- Rear fender C [4]

Installation is in the reverse order of removal.

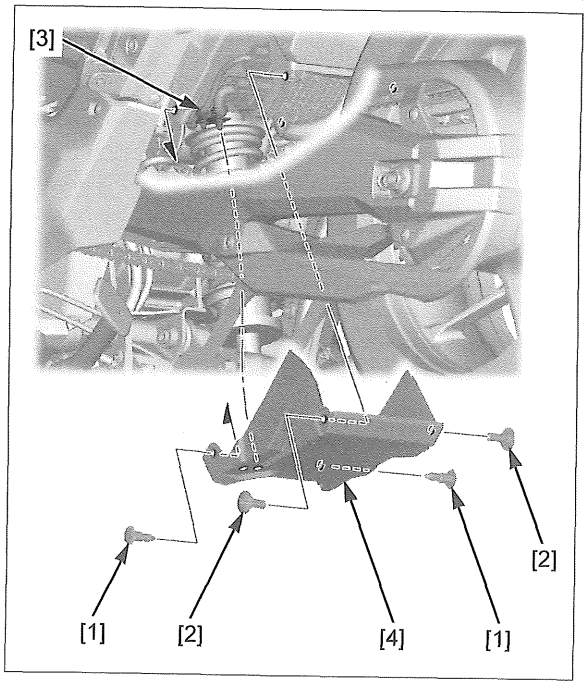

DRIVE CHAIN CASE

REMOVAL/INSTALLATION

Remove the socket bolts [1] and drive chain case [2].

Installation is in the reverse order of removal.

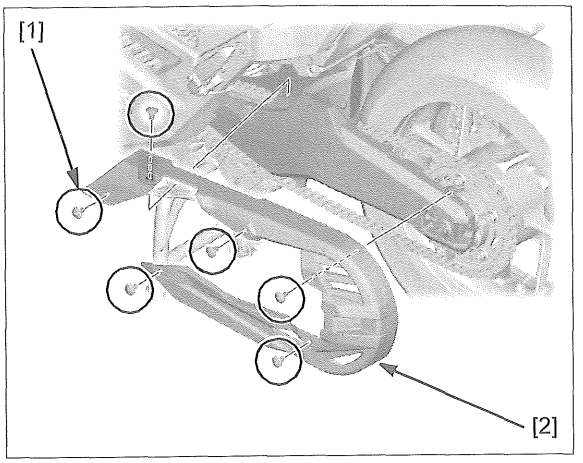

CENTERSTAND

REMOVAL/INSTALLATION

Support the motorcycle on its sidestand.

Unhook the centerstand return springs [1] from the centerstand hook.

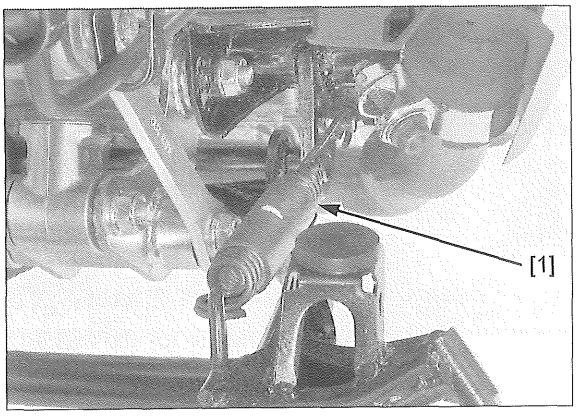

Remove the centerstand mounting bolt [1], pivot shaft [2] and centerstand [3].

Apply grease to the centerstand pivot shaft sliding surfaces.

Install the centerstand and insert the pivot shaft into the frame and center stand.

Install the mounting bolt and tighten it.

TORQUE: 12 N·m (1.2 kgf·m, 9 lbf·ft)

Hook the centerstand return springs to the centerstand and frame as shown.

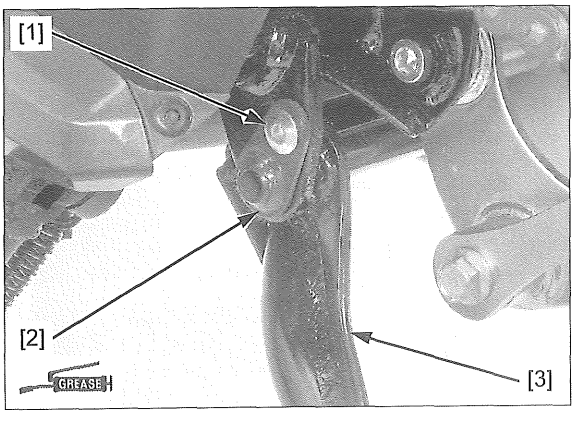

SIDESTAND

REMOVAL/INSTALLATION

Remove the sidestand switch (page 4-62).

Support the motorcycle on its centerstand.

Unhook the sidestand return springs [1].

Remove the sidestand pivot nut [2], bolt [3] and sidestand [4].

Apply grease to the sidestand pivot sliding surfaces.

Install the sidestand and pivot bolt, and tighten the pivot bolt.

TORQUE: 10 N·m (1.0 kgf·m, 7 lbf·ft)

After tightening the pivot bolt, return the pivot bolt 45° to 90°.

Install and tighten the sidestand pivot nut to the specified torque while holding the sidestand pivot bolt.

TORQUE: 39 N·m (4.0 kgf·m, 29 lbf·ft)

Hook the sidestand return springs to the sidestand and frame as shown.

Install the sidestand switch (page 4-62).

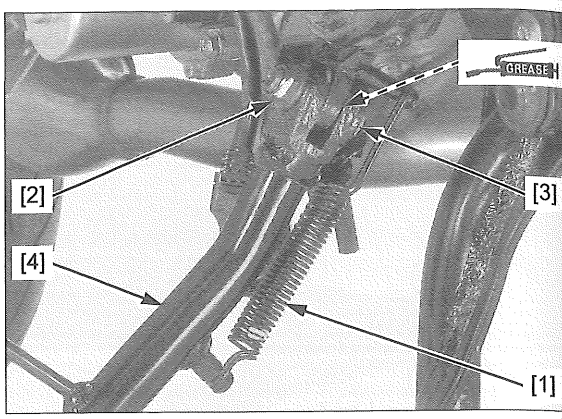

SEAT

REMOVAL/INSTALLATION

Open the fuel lid.

Remove the socket bolts [1].

Remove the pins [2], collars [3] and damper [4].

Remove the bolt [5] and stay [6] from the seat [7].

Installation is in the reverse order of removal.

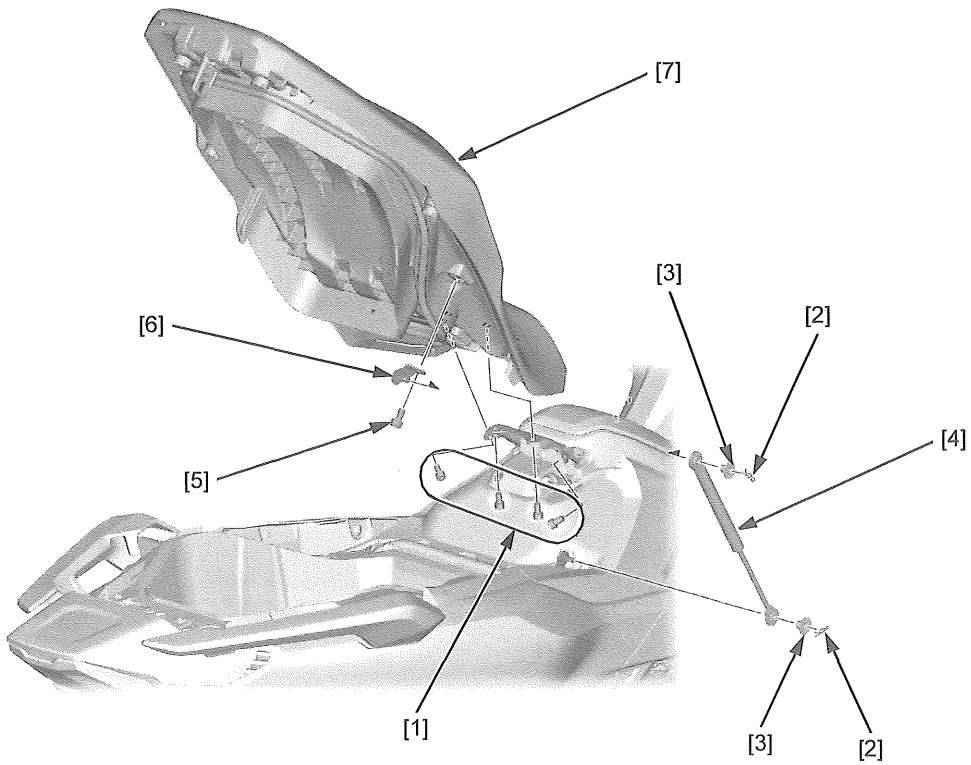

PILLION STEP HOLDER

REMOVAL/INSTALLATION

LEFT SIDE

Remove the luggage box cover (page 2-21).

Remove the bolts [1] and left pillion step holder [2].

Installation is in the reverse order of removal.

TORQUE:
Pillion step socket bolt:
32 N·m (3.3 kgf·m, 24 lbf·ft)

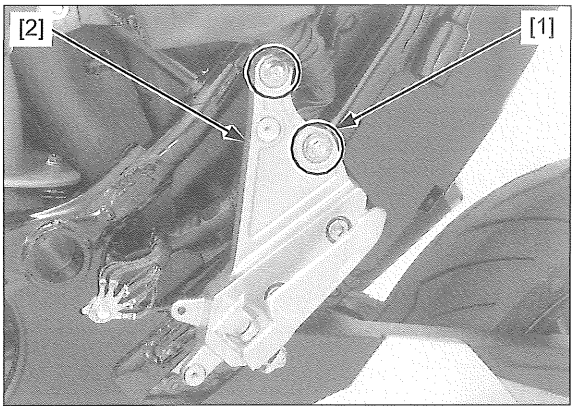

RIGHT SIDE

Remove the luggage box cover (page 2-21).

Remove the muffler mounting bolt [1] and washer [2].

Remove the bolts [3] and right pillion step holder [4].

Remove the collar [5] from the right pillion step holder.

Installation is in the reverse order of removal.

TORQUE:
Pillion step socket bolt:
32 N·m (3.3 kgf·m, 24 lbf·ft)

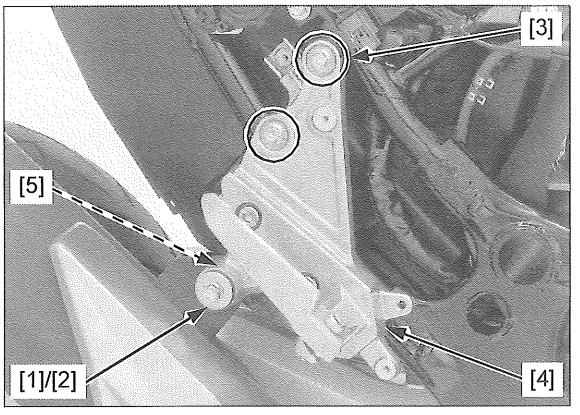

GRAB RAIL

REMOVAL/INSTALLATION

Open the seat.

Remove the caps [1] from the socket bolts [2].

Remove the following:

- Socket bolts
- Washer [3]
- Grab rail [4]

Installation is in the reverse order of removal.

TORQUE: 26 N·m (2.7 kgf·m, 19 lbf·ft)

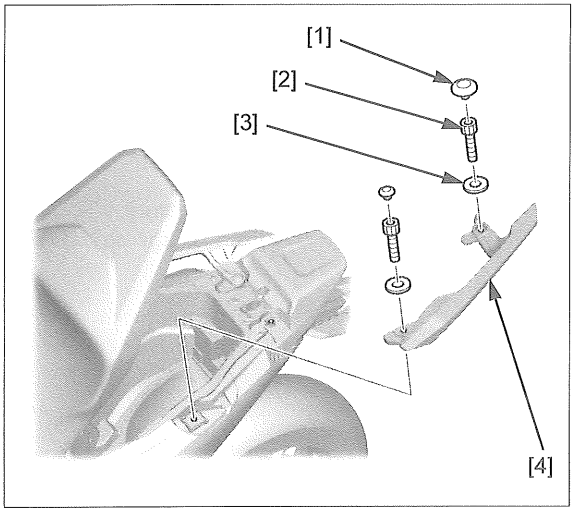

EXHAUST PIPE/MUFFLER

MUFFLER REMOVAL/INSTALLATION

Loosen the muffler band bolt [1].

Remove the muffler mounting bolt [2], washer [3], rubber [4], collar [5] and muffler [6].

Installation is in the reverse order of removal.

TORQUE:
Muffler band bolt:
17.5 N·m (1.8 kgf·m, 13 lbf·ft)

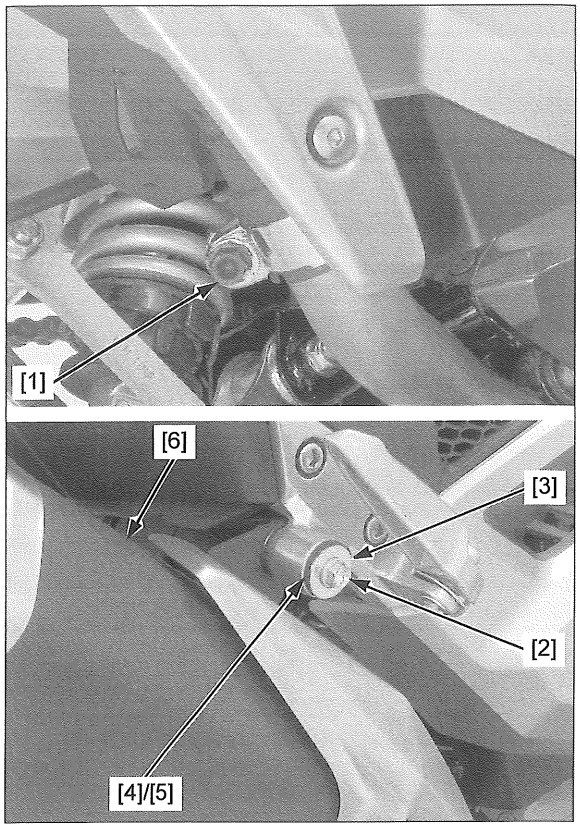

MUFFLER DISASSEMBLY/ASSEMBLY

Remove the gasket [1], muffler cover bolt [2] and muffler cover [3] from the muffler [4].

NOTE:
- Muffler cover move to forward.

Remove the grommet [5] from the muffler cover.

FO type: Remove the bolts [6] and protector [7].

Assembly is in the reverse order of disassembly.

Remove the muffler band bolt [8] if necessary.

TORQUE:
Muffler cover bolt:
10 N·m (1.0 kgf·m, 7 lbf·ft)

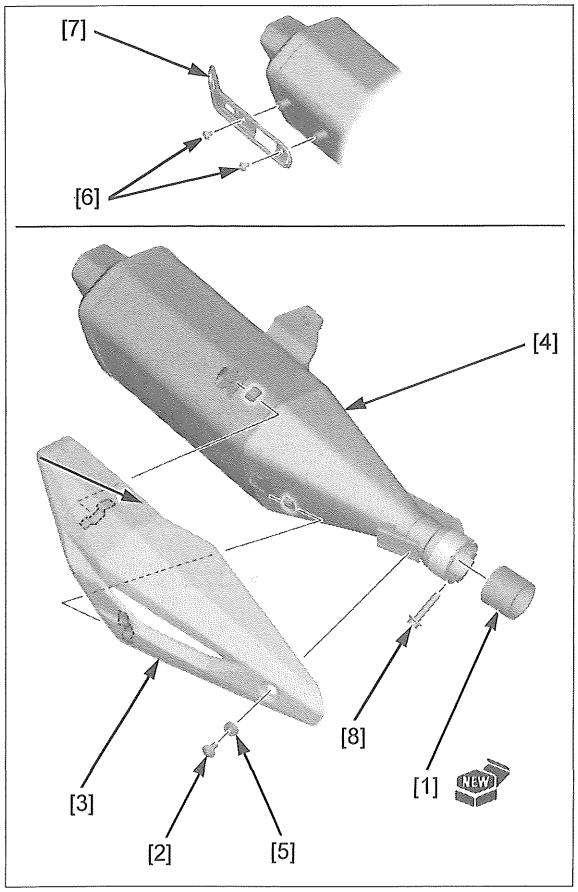

EXHAUST PIPE REMOVAL

Remove the right floor skirt/floor step (page 2-14).

Remove the muffler (page 2-34).

Disconnect the A/F sensor 4P (Black) connector (page 4-61).

Remove the A/F sensor if necessary (page 4-61).

Remove the exhaust pipe mounting nut [1], bolt [2], washer [3] and exhaust pipe [4].

Remove the exhaust pipe gasket [5].

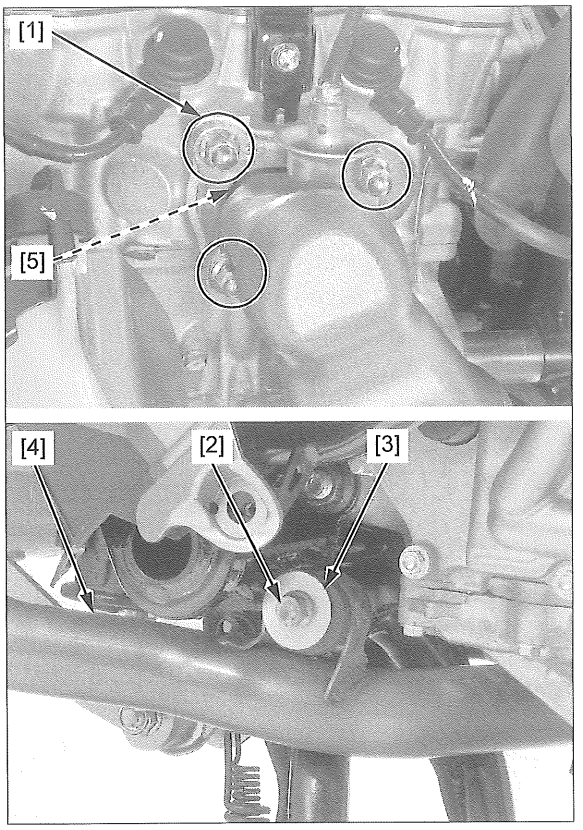

STUD BOLT REPLACEMENT

Remove the exhaust pipe/muffler (page 2-35).

Thread two nuts onto the stud and tighten them together, and use a wrench on them to turn the stud bolt out.

Install new stud bolts into the cylinder head as shown.

After installing the stud bolts, check that the length from the bolt head to the cylinder head surface is within specification.

Install the exhaust pipe/muffler (page 2-36).

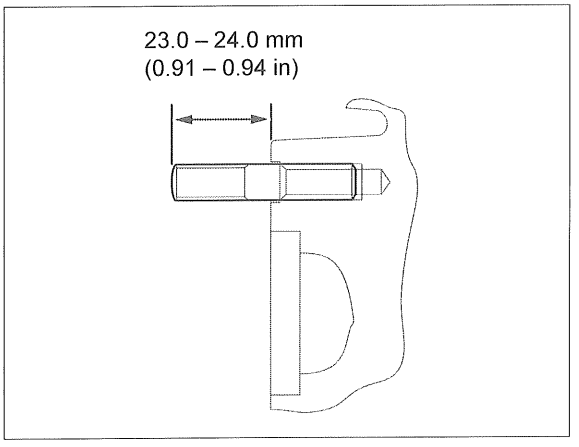

EXHAUST PIPE INSTALLATION

Install the exhaust pipe [1] with a new gasket [2] and loosely install the exhaust pipe joint nuts [3].

Loosely install the exhaust pipe mounting bolt [4], washer [5].

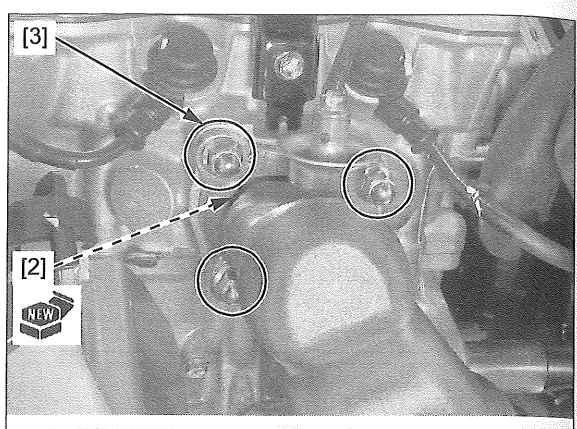

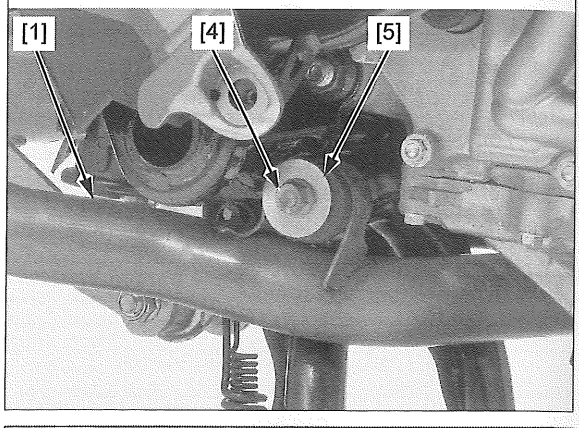

Install the muffler, then loosely install the rubber, collar, washer, muffler mounting bolt and band bolt (page 2-34).

Tighten the exhaust pipe joint nuts [1] to the specified torque in numerical order by stamped number on the exhaust pipe joint [2] in 2 or 3 steps.

TORQUE: 28 N·m (2.9 kgf·m, 21 lbf·ft)

Tighten the exhaust pipe mounting bolt securely.

Connect the A/F sensor 4P (Black) connector (page 4-61).

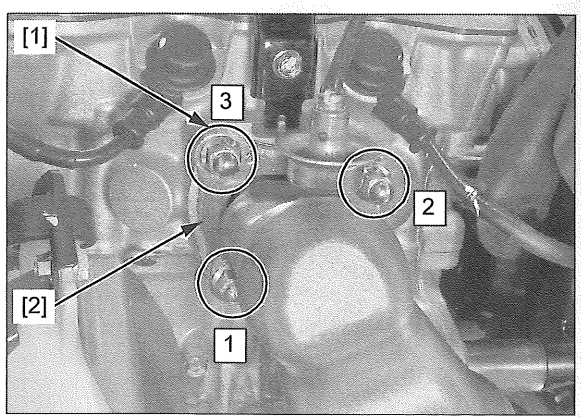

LEFT REAR COVER

REMOVAL/INSTALLATION

Remove the following:

- Step panel/side panel (page 2-18)
- Bolts [1]
- Left rear cover [2]
- Guide plate [3]

Installation is in the reverse order of removal.

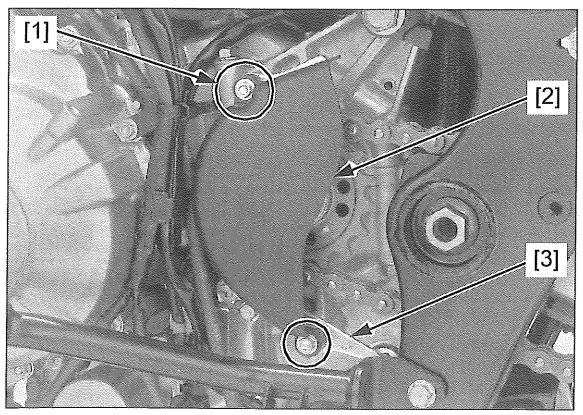

SERVICE INFORMATION 3-2
MAINTENANCE SCHEDULE 3-2
FUEL LINE 3-4
THROTTLE OPERATION 3-4
THROTTLE BODY (CH type only) 3-4
AIR CLEANER 3-5
CRANKCASE BREATHER 3-5
SPARK PLUG 3-6
VALVE CLEARANCE 3-7
ENGINE OIL 3-9
ENGINE OIL FILTER 3-10
CLUTCH OIL FILTER 3-11
ENGINE IDLE SPEED 3-12
RADIATOR COOLANT 3-13
COOLING SYSTEM 3-13
EVAPORATIVE EMISSION CONTROL SYSTEM 3-14
DRIVE CHAIN 3-14
DRIVE CHAIN SLIDER 3-17
BRAKE FLUID 3-18
BRAKE PADS WEAR 3-19
BRAKE SYSTEM 3-19
BRAKE LOCK OPERATION 3-20
HEADLIGHT AIM 3-22
SIDESTAND 3-22
SUSPENSION 3-23
NUTS, BOLTS, FASTENERS 3-24
WHEELS/TIRES 3-24
STEERING HEAD BEARINGS 3-24

SERVICE INFORMATION

GENERAL

- Place the motorcycle on level surface before starting any work.

MAINTENANCE SCHEDULE

ED, KO, FO TYPES

Perform the Pre-ride inspection in the Owner's Manual at each scheduled maintenance period.

I: Inspect and Clean, Adjust, Lubricate or Replace if necessary. C: Clean. R: Replace. A: Adjust. L: Lubricate.

The following items require some mechanical knowledge. Certain items (particularly those marked * and **) may require more technical information and tools. Consult a dealer.

	FREQUENCY / ITEMS	NOTE	ODOMETER READING (NOTE 1) x 1,000 km	1	12	24	36	48	ANNUAL CHECK	REGULAR REPLACE	REFER TO PAGE
			x 1,000 mi	0.6	8	16	24	32			
*	FUEL LINE				I	I	I	I	I		3-4
*	THROTTLE OPERATION				I	I	I	I	I		3-4
*	AIR CLEANER	NOTE 2				R		R			3-5
	CRANKCASE BREATHER	NOTE 3			C	C	C	C			3-5
*	SPARK PLUG					I		R			3-6
*	VALVE CLEARANCE					I		I			3-7
	ENGINE OIL			R	R	R	R	R	R		3-9
	ENGINE OIL FILTER			R		R		R			3-10
	CLUTCH OIL FILTER			R		R		R			3-11
*	ENGINE IDLE SPEED				I	I	I	I	I		3-12
	RADIATOR COOLANT	NOTE 4			I	I	I	I	I	3 years	3-13
*	COOLING SYSTEM				I	I	I	I	I		3-13
*	EVAPORATIVE EMISSION CONTROL SYSTEM					I		I			3-14
	DRIVE CHAIN			EVERY 1,000 km (600 mi) I, L							3-14
	DRIVE CHAIN SLIDER				I	I	I	I			3-17
	BRAKE FLUID	NOTE 4			I	I	I	I	I	2 years	3-18
	BRAKE PADS WEAR				I	I	I	I	I		3-19
	BRAKE SYSTEM				I	I	I	I	I		3-19
*	BRAKE LOCK OPERATION				I	I	I	I			3-20
	HEADLIGHT AIM				I	I	I	I	I		3-22
	SIDESTAND				I	I	I	I	I		3-22
*	SUSPENSION				I	I	I	I	I		3-23
*	NUTS, BOLTS, FASTENERS				I	I	I	I	I		3-24
**	WHEELS/TIRES				I	I	I	I	I		3-24
**	STEERING HEAD BEARINGS				I	I	I	I	I		3-24

* Should be serviced by a dealer, unless the owner has proper tools and service data and is mechanically qualified.

** In the interest of safety, we recommend these items be serviced only by a dealer.

Honda recommends that a dealer should road test your motorcycle after each periodic maintenance is carried out.

NOTES:

1. At higher odometer readings, repeat at the frequency interval established here.
2. Service more frequently when riding in unusually wet or dusty areas.
3. Service more frequently when riding in rain or at full throttle.
4. Replacement requires mechanical skill.

GS, CH TYPE

Perform the Pre-ride inspection in the Owner's Manual at each scheduled maintenance period.

I: Inspect and Clean, Adjust, Lubricate or Replace if necessary. C: Clean. R: Replace. A: Adjust. L: Lubricate.

The following items require some mechanical knowledge. Certain items (particularly those marked * and **) may require more technical information and tools. Consult a dealer.

	ITEMS	NOTE	FREQUENCY (NOTE 1)								ANNUAL CHECK	REGULAR REPLACE	REFER TO PAGE
			x 1,000 km	1	6	12	18	24	30	36			
			x 1,000 mi	0.6	4	8	12	16	20	24			
*	FUEL LINE					I		I		I	I		3-4
*	THROTTLE OPERATION					I		I		I	I		3-4
**	THROTTLE BODY (For CH type)					C		C		C			3-4
*	AIR CLEANER	NOTE 2					R			R			3-5
*	AIR CLEANER (For CH type)	NOTE 2				R		R		R			3-5
	CRANKCASE BREATHER	NOTE 3			C	C	C	C	C	C			3-5
*	SPARK PLUG			EVERY 24,000 km (16,000 mi): I EVERY 48,000 km (32,000 mi): R									3-6
*	VALVE CLEARANCE							I					3-7
	ENGINE OIL			R		R		R		R	R		3-9
	ENGINE OIL FILTER			R				R					3-10
	CLUTCH OIL FILTER			R				R					3-11
*	ENGINE IDLE SPEED					I		I		I	I		3-12
	RADIATOR COOLANT	NOTE 4				I		I		I	I	3 years	3-13
*	COOLING SYSTEM					I		I		I	I		3-13
*	EVAPORATIVE EMISSION CONTROL SYSTEM							I					3-14
	DRIVE CHAIN			EVERY 1,000 km (600 mi): I, L									3-14
	DRIVE CHAIN SLIDER					I		I		I			3-17
	BRAKE FLUID	NOTE 4			I	I	I	I	I	I	I	2 years	3-18
	BRAKE PADS WEAR				I	I	I	I	I	I	I		3-19
	BRAKE SYSTEM					I		I		I	I		3-19
*	BRAKE LOCK OPERATION				I	I	I	I	I	I			3-20
	HEADLIGHT AIM					I		I		I	I		3-22
	SIDESTAND					I		I		I	I		3-22
*	SUSPENSION					I		I		I	I		3-23
*	NUTS, BOLTS, FASTENERS					I		I		I	I		3-24
**	WHEELS/TIRES					I		I		I	I		3-24
**	STEERING HEAD BEARINGS					I		I		I	I		3-24

* Should be serviced by a dealer, unless the owner has proper tools and service data and is mechanically qualified.

** In the interest of safety, we recommend these items be serviced only by a dealer.

Honda recommends that a dealer should road test your motorcycle after each periodic maintenance is carried out.

NOTES:

1. At higher odometer readings, repeat at the frequency interval established here.
2. Service more frequently when riding in unusually wet or dusty areas.
3. Service more frequently when riding in rain or at full throttle.
4. Replacement requires mechanical skill.

FUEL LINE

INSPECTION

Lift up and support the fuel tank (page 7-6).

Check the fuel feed hose [1] for deterioration, damage, or leakage.

Also, check the hose fittings for damage or looseness.

Replace the fuel pump packing if necessary.

Installation the removed parts in the reverse order of removal.

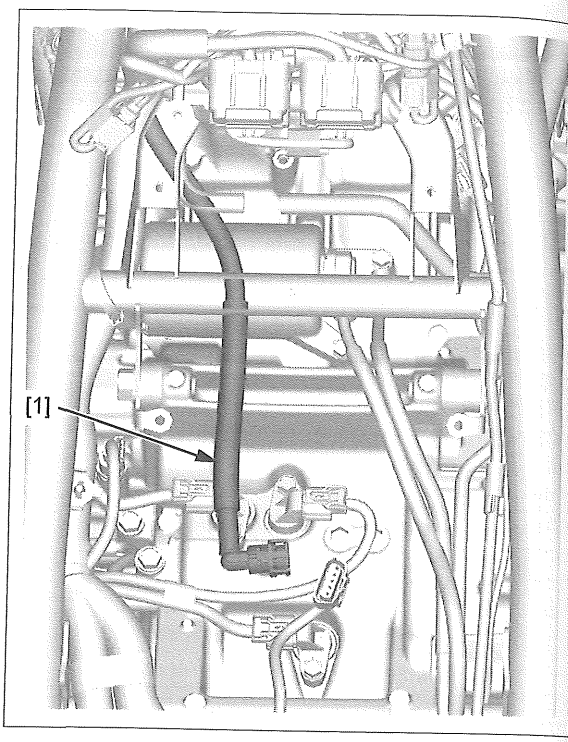

THROTTLE OPERATION

Check for smooth operation of the throttle grip [1] and that it returns automatically to the fully closed position from any open position.

Replace the right handlebar switch if the throttle operation is not smooth (page 21-17).

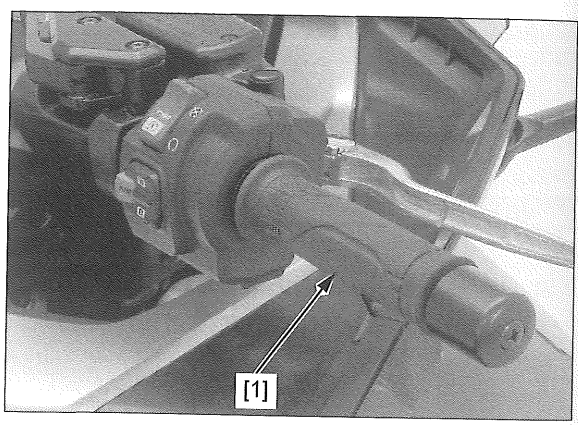

THROTTLE BODY (CH type only)

CLEANING

Clean the throttle bore [1] and throttle valve [2] surface by lightly rubbing with a shop towel soaked with a commercially available carburetor cleaner until the carbon deposits are completely removed.

- Do not spray the carburetor cleaner directly into the throttle bore.
- Do not allow any foreign material or carbon deposit remain inside the throttle bore.

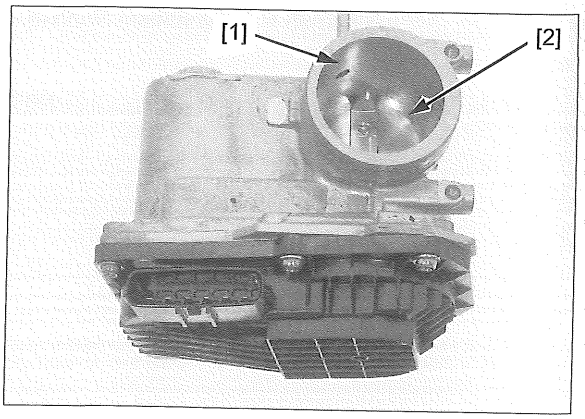

AIR CLEANER

REMOVAL/INSTALLATION

Remove the inner/inner center/front inner cowl (page 2-9).

Disconnect the IAT sensor 2P (Black) connector [1].

Remove the air cleaner housing cover screws [2] and air cleaner housing cover [3].

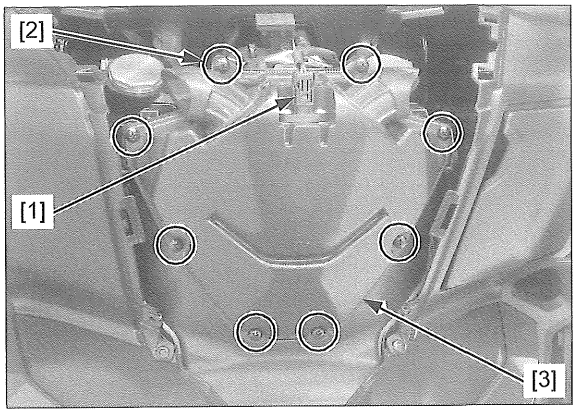

Release the tab [1] and remove the air cleaner element [2].

Replace the air cleaner element in accordance with the maintenance schedule (page 3-2)or any time the motorcycle has been ridden in unusually wet or dusty areas.

Installation is in the reverse order of removal.

TORQUE:

Air cleaner housing cover screw:
1.1 N·m (0.1 kgf·m, 0.8 lbf·ft)

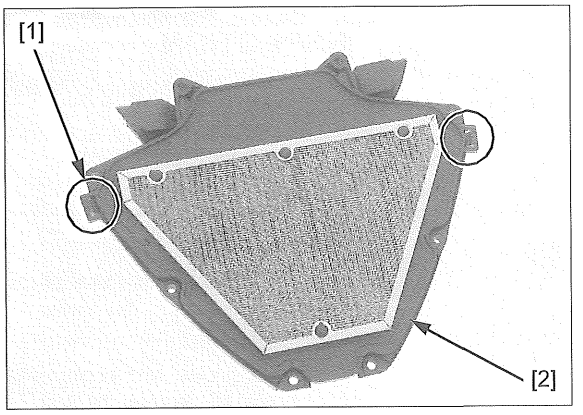

CRANKCASE BREATHER

Check the air cleaner housing drain hose [1].

NOTE:

- Service if the deposits level can be seen in the transparent section of the air cleaner housing drain hose.

If necessary, remove the drain plug [2] from the air cleaner housing drain hose and drain the deposits into a suitable container.

Reinstall the drain plug securely.

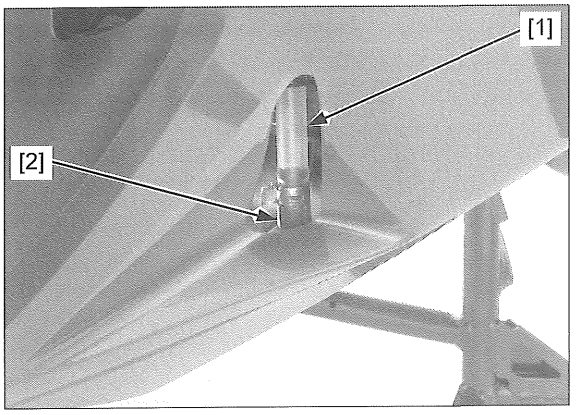

SPARK PLUG

REMOVAL/INSTALLATION

Disconnect the No.1 spark plug cap [1] and No.2 spark plug cap [2].

Clean around the spark plug base with compressed air before removing the spark plug, and be sure that no debris is allowed to enter the combustion chamber.

Remove the spark plugs [3].

Inspect or replace the spark plugs as described in the maintenance schedule (page 3-2).

Install and hand tighten the spark plugs to the cylinder head, then tighten the spark plugs to the specified torque.

TORQUE: 22 N·m (2.2 kgf·m, 16 lbf·ft)

Connect the spark plug caps securely.

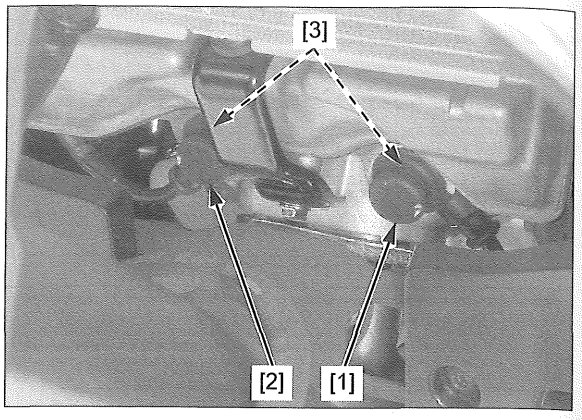

INSPECTION

Check the following and replace the spark plug if necessary.

- Insulator [1] for damage
- Center electrode [2] and side electrode [3] for wear
- Coloration or burning condition

NOTE:

- This motorcycle's spark plugs are equipped with an iridium center electrode. Do not clean the electrodes.

If the electrodes are contaminated with accumulated objects or dirt, replace the spark plug.

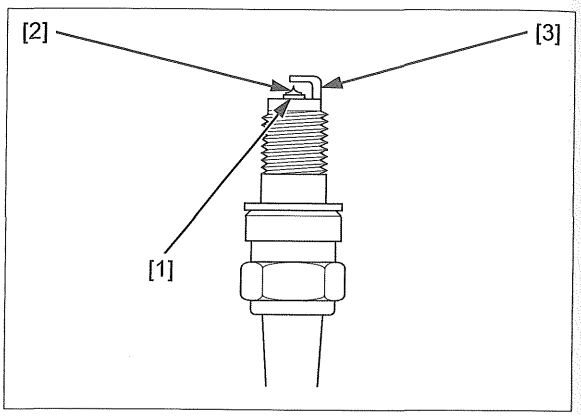

Replace the plug if the center electrode [1] is rounded as shown in the illustration.

SPECIFIED SPARK PLUG: IFR6G-11K (NGK)

NOTE:

- Always use specified spark plugs on this motorcycle.

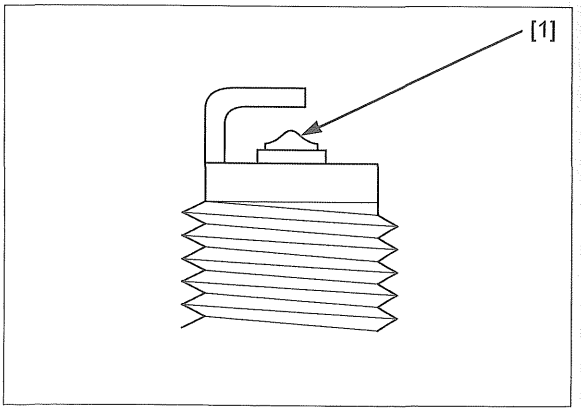

Check the gap between the center and side electrodes with a wire type feeler gauge [1].

NOTE:

- To prevent damaging the iridium center electrode, use a wire type feeler gauge to check the spark plug gap.

Make sure that the Φ 1.2 mm (0.05 in) plug gauge can not be inserted between the gap.

NOTE:

- Do not adjust the spark plug gap. If the gap is out of specification, replace it with a new one.

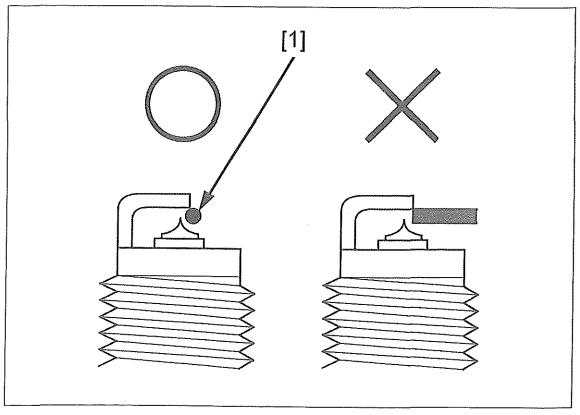

VALVE CLEARANCE

INSPECTION

NOTE:

- Inspect and adjust the valve clearance while the engine is cold (below 35°C/95°F).
- Inspection and adjustment of the valve clearance can be serviced with the engine installed in the frame.

Remove the cylinder head cover (page 10-4).

Remove the timing hole cap [1] and crankshaft hole cap [2].

Remove the O-rings [3] from the hole caps.

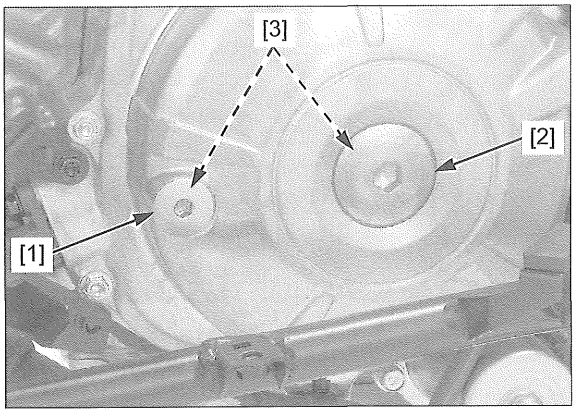

Remove the camshaft maintenance cap [1] and O-ring [2].

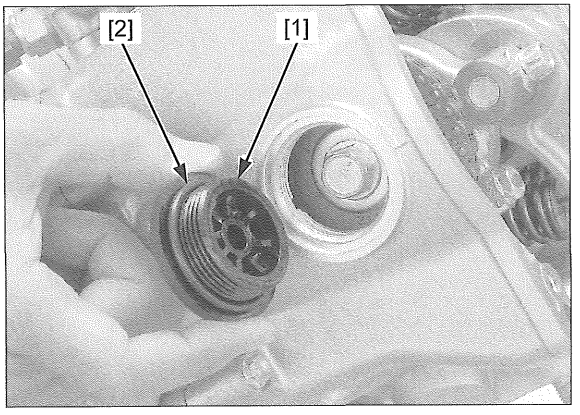

No.1 Cylinder: Rotate the crankshaft counterclockwise and align the "1T" mark [1] on the flywheel with the index notch [2] on the alternator cover.

Make sure that the "1" mark [3] on the cam sprocket is aligned with the lower cylinder head index line [4].

If the "1" mark is facing the upper cylinder head index line [5], turn the crankshaft counterclockwise one full turn (360°) and realign the "1T" mark with the index notch.

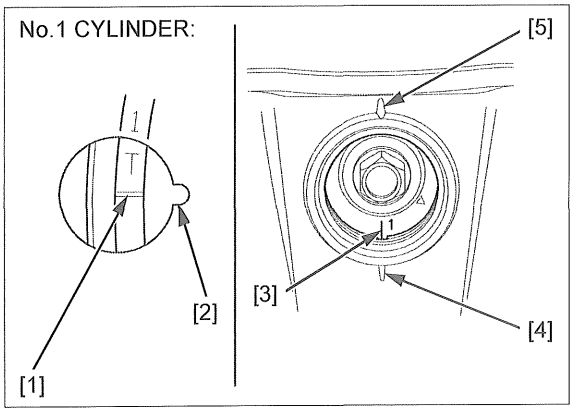

Check the valve clearance by inserting a feeler gauge [1] between the valve adjusting screw and valve stem.

VALVE CLEARANCE:

IN: 0.17 ± 0.02 mm (0.007 ± 0.001 in)

EX: 0.28 ± 0.02 mm (0.011 ± 0.001 in)

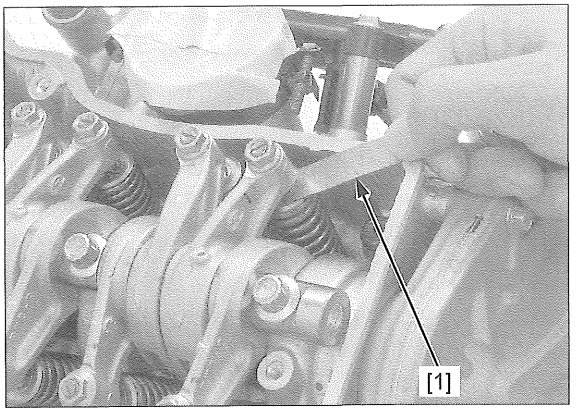

No.2 Cylinder: Rotate the crankshaft counterclockwise 3/4 turn (270°) and align the "2T" mark [1] on the flywheel with the index notch [2] on the alternator cover.

Make sure that the "2" mark [3] on the cam sprocket is aligned with the lower cylinder head index line [4].

Check the valve clearance in the same manner as No.1 cylinder.

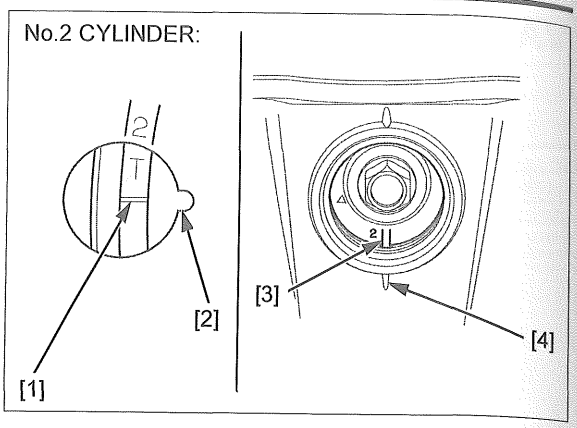

ADJUSTMENT

Loosen the lock nut [1] and apply engine oil to the adjusting screw threads and seating surface.

Adjust by turning the adjusting screw [2] until there is a slight drag on the feeler gauge [3].

Apply engine oil to the lock nut.

Hold the adjusting screw and tighten the lock nut to the specified torque.

TORQUE: 14 N·m (1.4 kgf·m, 10 lbf·ft)

After tightening the lock nut, recheck the valve clearance.

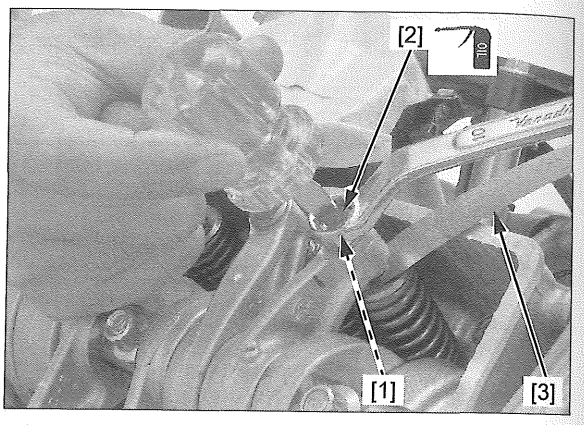

Apply engine oil to a new O-ring [1] and install it to the camshaft maintenance cap [2].

Loosely Install the camshaft maintenance cap to the cylinder head.

If the engine is removed from the frame, tighten the camshaft maintenance cap to the specified torque.

TORQUE: 4.0 N·m (0.4 kgf·m, 3.0 lbf·ft)

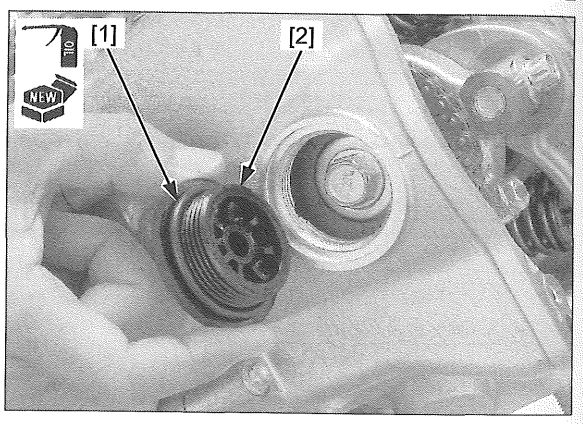

If the engine is installed on the frame, insert a feeler gauge (0.1 mm) [1] between the camshaft maintenance cap and cylinder head.

Tighten the camshaft maintenance cap securely.

Remove the feeler gauge.

Further tighten the camshaft maintenance cap at 30°.

NOTE:

- The length of one concave area [2] on the camshaft maintenance cap is equivalent with 30°.

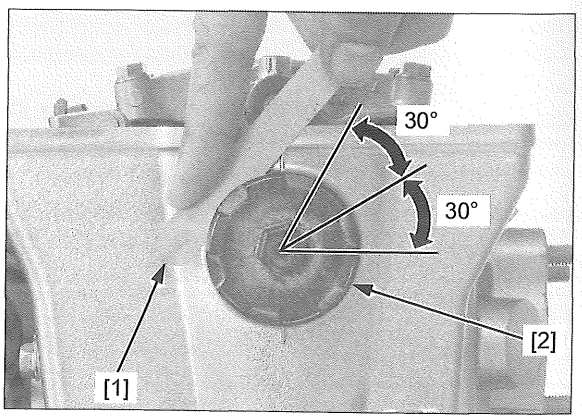

Apply engine oil to new O-rings [1] and install them to the timing hole cap [2] and crankshaft hole cap [3].

Apply grease to the timing hole cap and crankshaft hole cap threads, then install and tighten them to the specified torque.

TORQUE:

Timing hole cap:
10 N·m (1.0 kgf·m, 7 lbf·ft)

Crankshaft hole cap:
15 N·m (1.5 kgf·m, 11 lbf·ft)

Install the cylinder head cover (page 10-4).

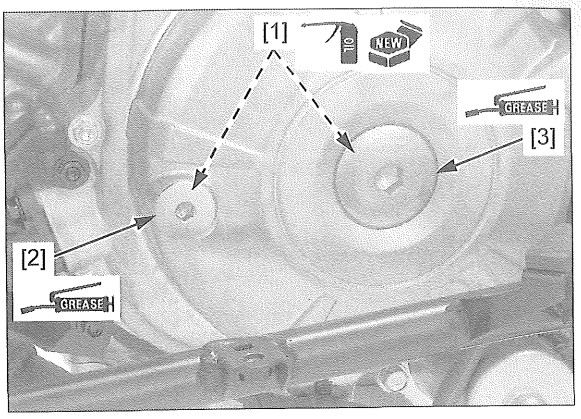

ENGINE OIL

OIL LEVEL INSPECTION

Hold the motorcycle in an upright position.

Start the engine and let it idle for 3 – 5 minutes.

Stop the engine and wait 2 – 3 minutes.

Remove the oil filler cap/dipstick [1] and wipe it clean.

Reinstall the oil filler cap/dipstick, but do not screw in.

Remove the oil filler cap/dipstick and check the oil level.

If the level is below or near the lower level [2] on the dipstick, fill the recommended engine oil to the upper level [3].

RECOMMENDED ENGINE OIL:
Honda "4-stroke motorcycle oil" or an equivalent motor oil.
API service classification: SJ or higher
JASO T903 standard: MA
Viscosity: SAE 10W-30

Check that the O-ring [4] is in good condition, replace it if necessary.

Apply engine oil to the O-ring.

Install the oil filler cap/dipstick.

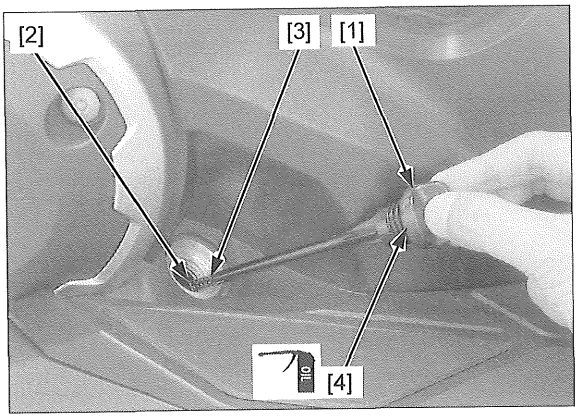

ENGINE OIL CHANGE

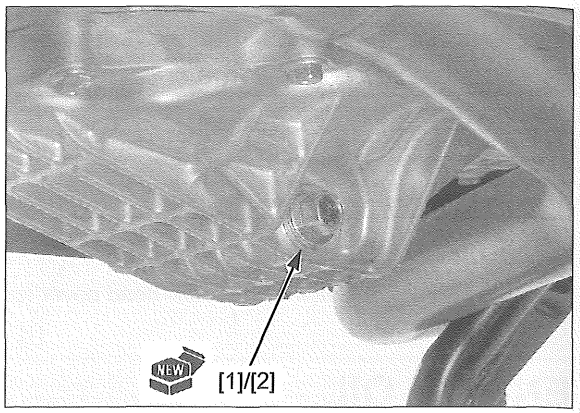

Warm up the engine.

Stop the engine.

Place an oil pan under the engine to catch the engine oil, then remove the engine oil drain bolt [1] and sealing washer [2].

Remove the oil filler cap/dipstick (page 3-9).

Drain the engine oil completely.

Clean the drain bolt and install a new sealing washer onto the drain bolt.

Install and tighten the drain bolt/sealing washer to the specified torque.

TORQUE: 30 N·m (3.1 kgf·m, 22 lbf·ft)

Fill the engine with the recommended engine oil (page 3-9).

ENGINE OIL CAPACITY:

3.1 liters (3.3 US qt, 2.7 Imp qt) at draining
3.4 liters (3.6 US qt, 3.0 Imp qt) at oil filter change
4.0 liters (4.2 US qt, 3.5 Imp qt) at disassembly

Install the oil filler cap/dipstick (page 3-9).

Check the engine oil level (page 3-9).

Make sure there are no oil leaks.

ENGINE OIL FILTER

NOTE:

- Replace the clutch oil filter when the engine oil filter is replaced.

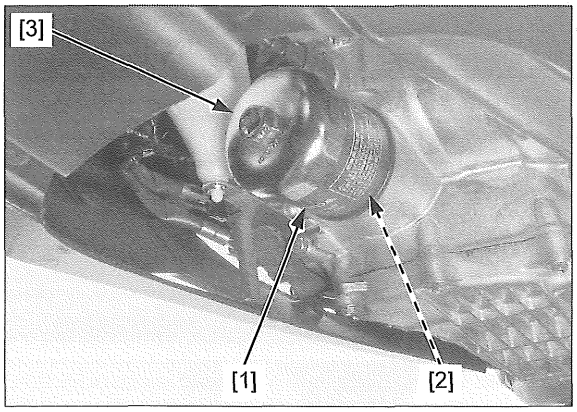

Drain the engine oil (page 3-10).

Remove the oil filter cartridge [1] and O-ring [2] using the special tool.

TOOL:

Oil filter wrench [3] **07HAA-PJ70101**

Check that the oil filter boss protrusion from the crankcase is the specified length as shown.

SPECIFIED LENGTH: 16.5 ± 0.5 mm (0.65 ± 0.02 in)

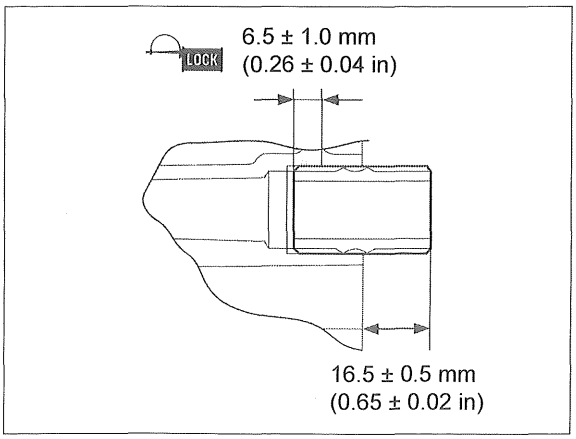

NOTE:

- If the oil filter boss is removed, apply locking agent to the oil filter boss threads as shown and install it.

Clean the oil filter attaching surface of the crankcase.

Apply engine oil to a new oil filter cartridge [1] threads and O-ring [2].

Install and tighten the oil filter cartridge with the special tool to the specified torque.

TOOL:
Oil filter wrench [3] **07HAA-PJ70101**

TORQUE: 26 N·m (2.7 kgf·m, 19 lbf·ft)

Fill the engine with the recommended engine oil and check that there are no oil leaks (page 3-9).

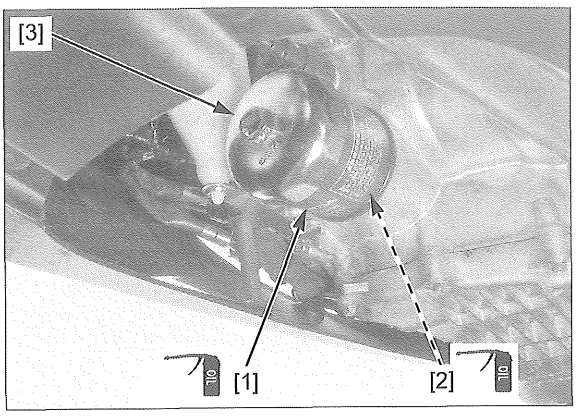

CLUTCH OIL FILTER

REMOVAL

NOTE:

- Replace the engine oil filter when the clutch oil filter is replaced.

Drain the engine oil (page 3-10).

Remove the bolts [1], clutch oil filter cover [2], and O-ring [3].

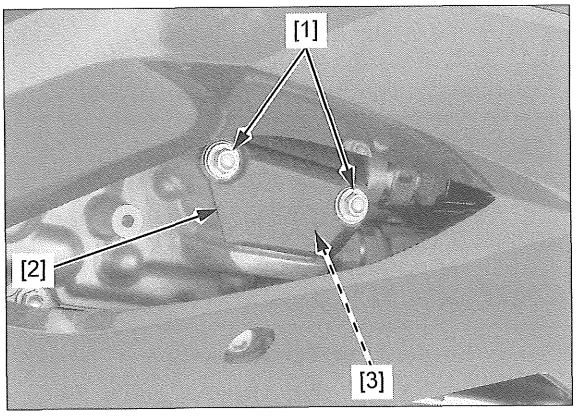

Remove the spring [1], and clutch oil filter [2].

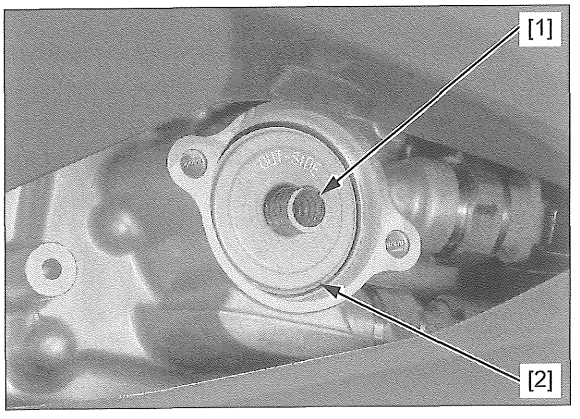

INSTALLATION

Install a new clutch oil fitter [1] with the "OUTSIDE" mark [2] facing out.

Install the spring [3].

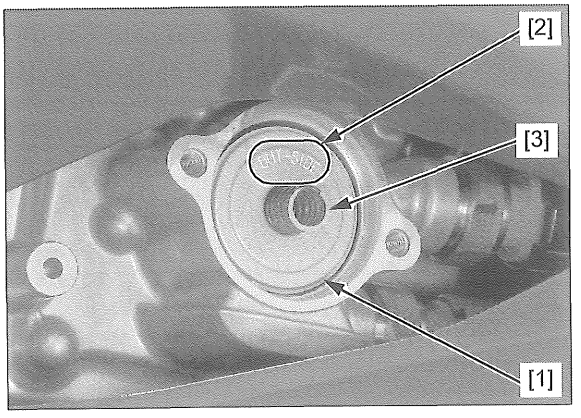

Apply engine oil to a new O-ring [1] and install it into the groove of the clutch filter cover [2].

Install the clutch filter cover.

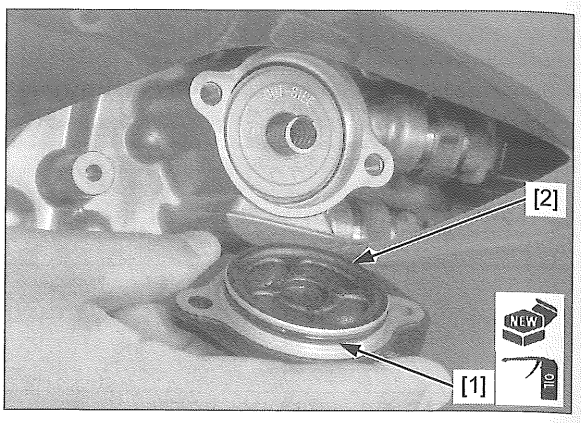

Install the bolts [1] and tighten them securely.

Fill the engine with the recommended engine oil and check that there are no oil leaks (page 3-9).

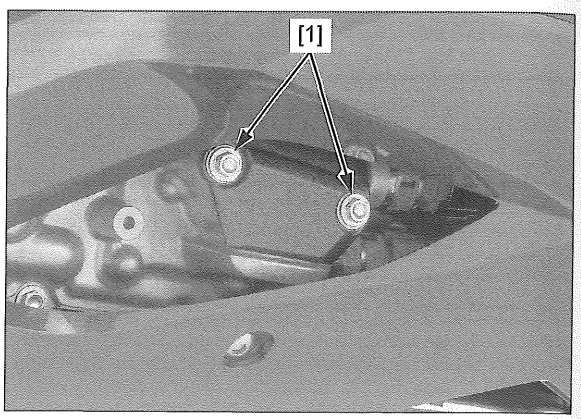

ENGINE IDLE SPEED

NOTE:

- The engine must be warm for accurate idle speed inspection.
- This system eliminates the need for manual idle speed adjustment compared to previous designs.

Start the engine and warm it up to coolant temperature 80°C (176°F).

Let the engine idle and check the idle speed.

IDLE SPEED: 1,200 ± 100 min^{-1} (rpm)

If the idle speed is out of the specification, check the following:

– Throttle operation (page 3-4)
– Intake air leak
– Engine top-end problem (page 10-2)

RADIATOR COOLANT

Check the coolant level of the reserve tank with the engine running at normal operating temperature.

The level should be between the "UPPER" level line [1] and "LOWER" level line [2] with the motorcycle in an upright position.

If necessary, add recommended coolant.

Remove the right floor skirt/floor step (page 2-14).

Remove the reserve tank cap [3] and add the coolant to the "UPPER" level line.

RECOMMENDED ANTIFREEZE:

High quality ethylene glycol antifreeze containing silicate-free corrosion inhibitors

RECOMMENDED MIXTURE:

1:1 mixture with distilled water

Reinstall the reserve tank cap.

Check to see if there are any coolant leaks when the coolant level decreases very rapidly.

If the reserve tank becomes completely empty, there is a possibility of air getting into the cooling system.

Be sure to remove any air from the cooling system (page 8-4).

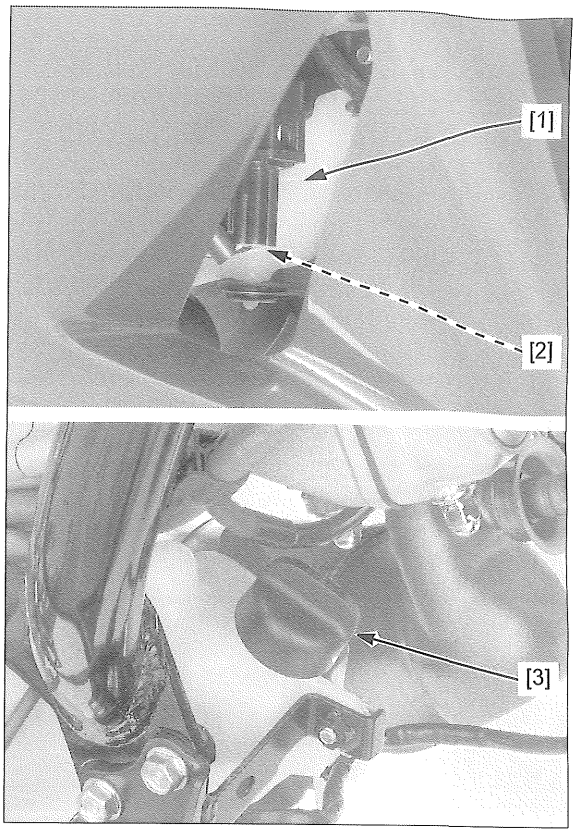

COOLING SYSTEM

Check the radiator air passages for clogging or damage.

Straighten bent fins, and remove insects, mud, or other obstructions with compressed air or low water pressure.

Replace the radiator if the air flow is restricted over more than 20 % of the radiating surface.

Inspect the water hoses for cracks or deterioration, and replace them if necessary.

Check the tightness of all water hose band screws (page 8-8).

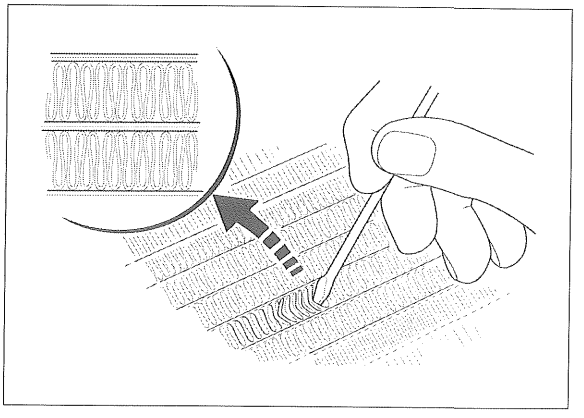

EVAPORATIVE EMISSION CONTROL SYSTEM

Remove the fuel tank (page 7-6).

Check the hoses between the fuel tank [1], EVAP canister [2], EVAP purge control solenoid valve [3], and cylinder head [4] for deterioration, damage, or loose connection.

Check the EVAP canister for cracks or other damage.

Refer to the cable & harness routing for hose connections (page 1-20).

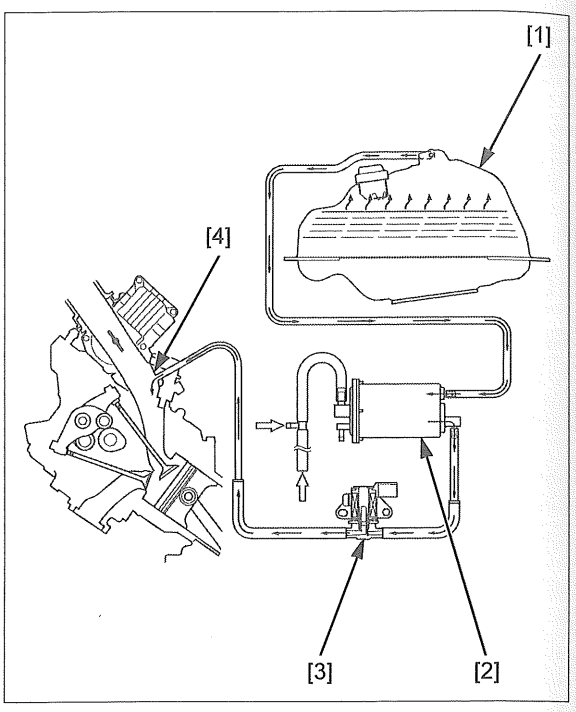

DRIVE CHAIN

⚠WARNING

Amputation hazard. Never inspect or adjust the drive chain while the engine is running.

DRIVE CHAIN SLACK INSPECTION

Turn the ignition switch OFF.

Support the motorcycle on its centerstand.

Check the slack in the lower half of the drive chain midway between the sprockets.

NOTE:

- While depressing the drive chain, measure the distance from the bottom of the swingarm to the drive chain.

DRIVE CHAIN SLACK: 40 – 45 mm (1.6 – 1.8 in)

NOTICE

- *Excessive chain slack may damage the frame.*

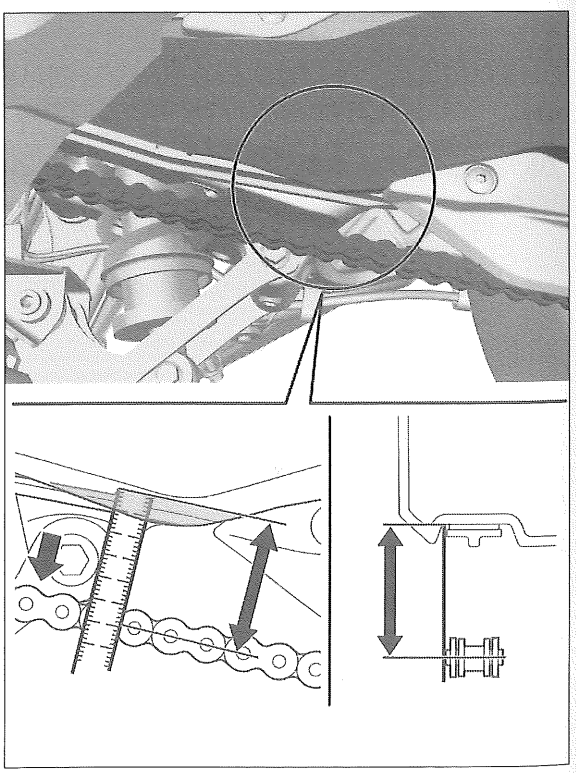

ADJUSTMENT

Loosen the rear axle nut [1].

Loosen the left/right lock nuts [2] and turn the left/right adjusting bolts [3] until the correct drive chain slack is obtained.

Make sure the adjusting plates [4] rear end are aligned with same index lines [5] on the swingarm.

After adjusting tighten the axle nut to the specified torque.

TORQUE: 98 N·m (10.0 kgf·m, 72 lbf·ft)

Hold the adjusting bolts and tighten the lock nuts securely.

Recheck the drive chain slack and free wheel rotation.

Check the drive chain wear indicator label [1] attached on the left swingarm.

If the index mark [2] of the drive chain adjusting plate [3] is in the red zone of the indicator label, replace the drive chain with a new one (page 3-16).

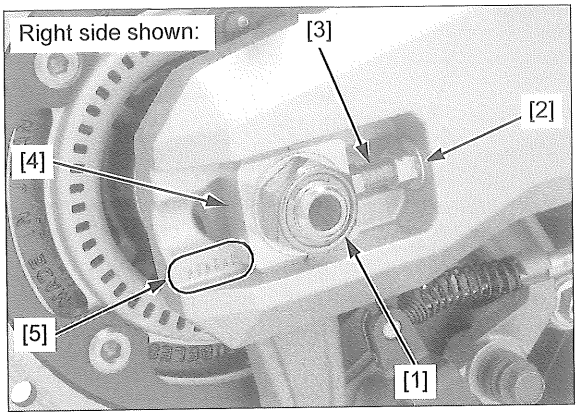

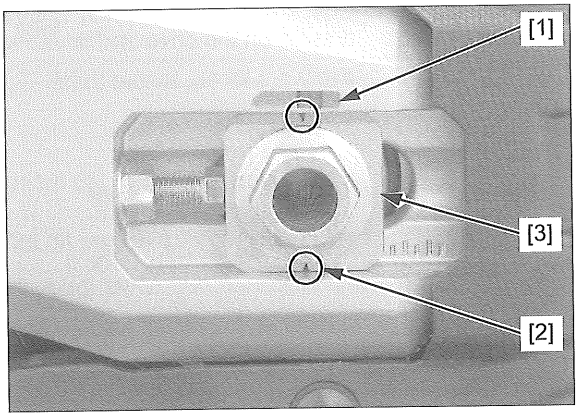

CLEANING AND LUBRICATION

Clean the drive chain [1] with a chain cleaner designed specifically for O-ring chains. Use a soft brush if the drive chain is dirty.

NOTICE

Do not use a steam cleaner, high pressure cleaner, wire brush, volatile solvent such as gasoline and benzene, abrasive cleaner or a chain cleaner NOT designed specifically for O-ring chains to clean the drive chain.

Inspect the drive chain for possible damage or wear.

Replace any drive chain that has damaged rollers, loose fitting links, or otherwise appears unserviceable.

Be sure the drive chain has dried completely before lubricating.

Lubricate the drive chain with drive chain lubricant [2].

RECOMMENDED LUBRICANT:

Dive chain lubricant designed specifically for O-ring chains or SAE #80-90 gear oil

NOTICE

Do not use a chain lubricant NOT designed specifically for use with O-ring chains to lubricate the drive chain.

Wipe off the excess oil or drive chain lubricant.

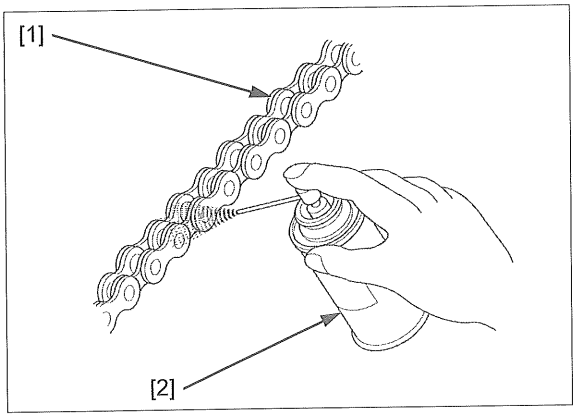

SPROCKET INSPECTION

Remove the left rear cover (page 2-36).

Remove the drive chain case (page 2-31).

Inspect the drive and driven sprocket teeth for wear or damage, replace if necessary.

Never use a new drive chain on worn sprockets.

Both chain and sprockets must be in good condition, or the replacement chain will wear rapidly.

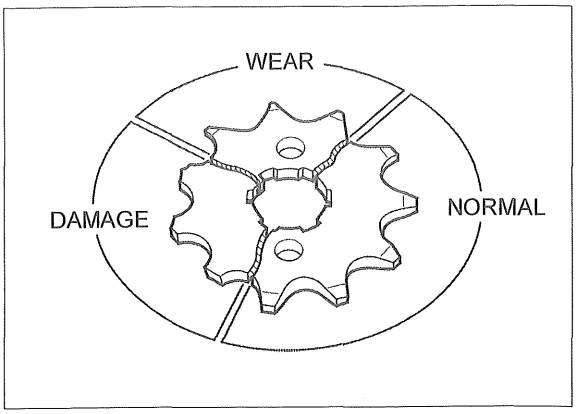

Check the drive sprocket bolt [1] and driven sprocket nuts [2] on the drive and driven sprockets.

If any are loose, torque them.

TORQUE:
Drive sprocket bolt:
54 N·m (5.5 kgf·m, 40 lbf·ft)
Driven sprocket nut:
108 N·m (11.0 kgf·m, 80 lbf·ft)

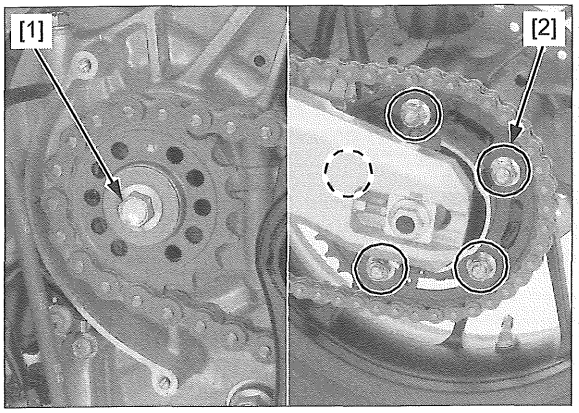

Install the left rear cover (page 2-36).

Install the drive chain case (page 2-31).

REPLACEMENT

This motorcycle uses a drive chain with a staked master link.

Fully slacken the drive chain (page 3-15).

Remove the drive chain case (page 2-31).

Remove the drive chain using the special tool.

NOTE:
- When using the special tool, follow the manufacturer's instruction.

TOOL:
Drive chain tool set **07HMH-MR10103**

Remove the excess drive chain links from a new drive chain with the drive chain tool set.

STANDARD LINKS: 118 LINKS

REPLACEMENT CHAIN: DID520VO-120ZB

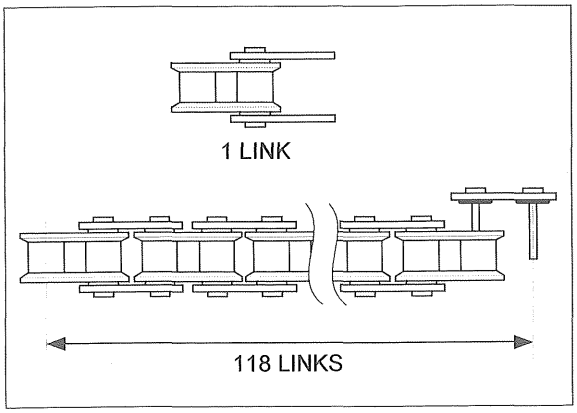

Never reuse the old drive chain, master link, master link plate, or O-rings.

Insert a new master link [1] with new O-rings [2] from the inside of the drive chain, and install a new plate [3] and O-rings with the identification mark facing the outside.

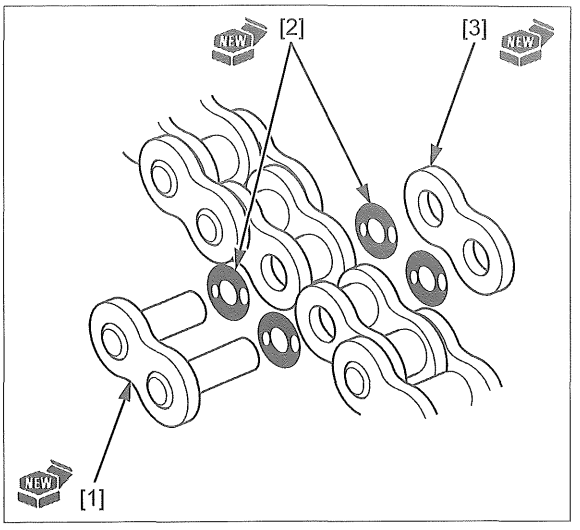

Assemble the master link, O-rings and plate.

TOOL:
Drive chain tool set 07HMH-MR10103

Make sure that the master link pins [1] are installed properly.

Measure the master link pin length projected from the plate.

STANDARD LENGTH: 1.3 mm (0.05 in)

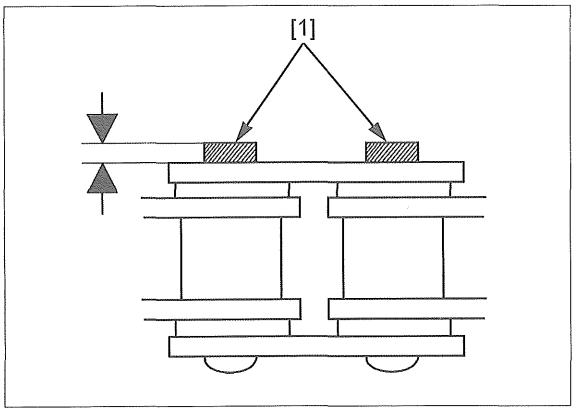

Stake the master link pins.

Make sure that the pins are staked properly by measuring the diameter of the staked area using a slide caliper [1].

DIAMETER OF THE STAKED AREA:
5.40 – 5.60 mm (0.213 – 0.220 in)

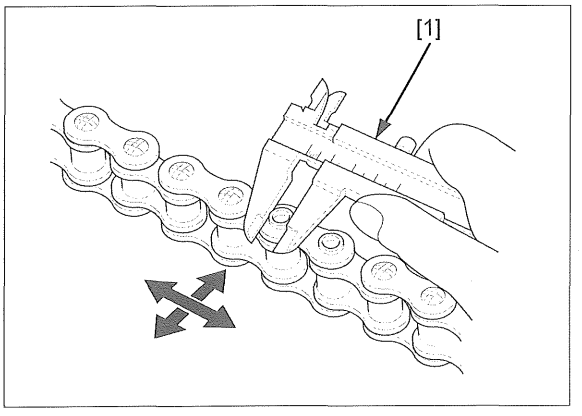

After staking, check the staked area of the master link for cracks.

If there is any cracking, replace the master link, O-rings, and plate.

Install the drive chain case (page 2-31).

Adjust the drive chain slacken (page 3-15).

DRIVE CHAIN SLIDER

Check the drive chain slider for wear or damage.

The drive chain slider must be replaced if it is worn to the wear limit indicators [1] (page 17-11).

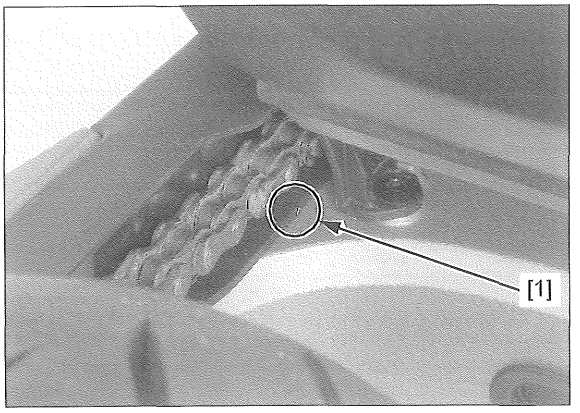

BRAKE FLUID

NOTICE

Spilled fluid can damage painted, plastic or rubber parts. Place a rag over these parts whenever the system is serviced.

NOTE:

- Do not mix different types of fluid, as they are not compatible with each other.
- Do not allow foreign material to enter the system when filling the reservoir.
- When the fluid level is low, check the brake pads for wear (page 3-19).
- A low fluid level may be due to wear of the brake pads. If the brake pads are worn and caliper pistons are pushed out, this accounts for a low fluid level. If the brake pads are not worn and fluid level is low, check the entire system for leaks (page 3-19).

Turn the handlebar so that the reservoir is level and check the front brake fluid level through the sight glass [1].

If the level is near the "LOWER" level line [2], check the following:

– Brake pads (page 3-19)
– Entire system for leaks (page 3-19)

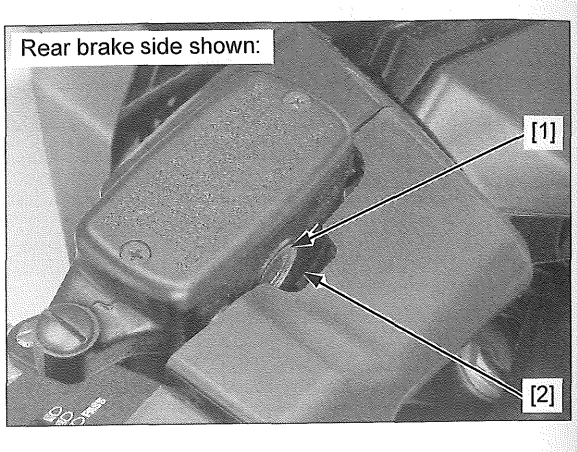

BRAKE PADS WEAR

BRAKE PADS

Check the brake pads for wear.

Always replace the brake pads as a set to assure even disc pressure.

Replace the brake pads if either pad is worn to the bottom of the wear limit grooves [1].

For brake pad replacement.

- Front brake pad (page 18-7)
- Rear brake pad (page 18-9)

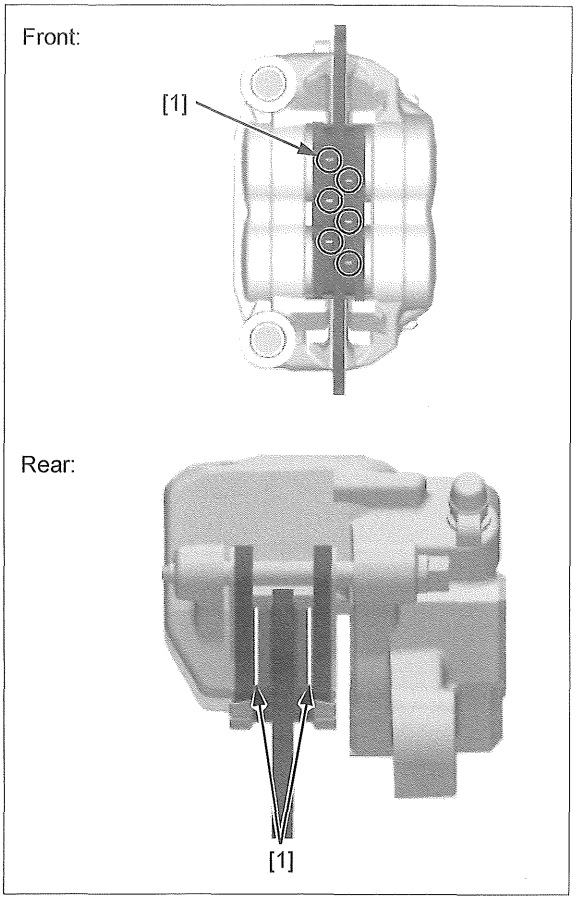

BRAKE SYSTEM

INSPECTION

Firmly apply the brake lever, and check that no air has entered the system.

If the lever feels soft or spongy when operated, bleed the air from the system.

For brake air bleeding (page 18-5).

Inspect the brake hose [1] and fittings for deterioration, cracks, and signs of leakage.

Tighten any loose fittings.

Replace hoses and fittings as required.

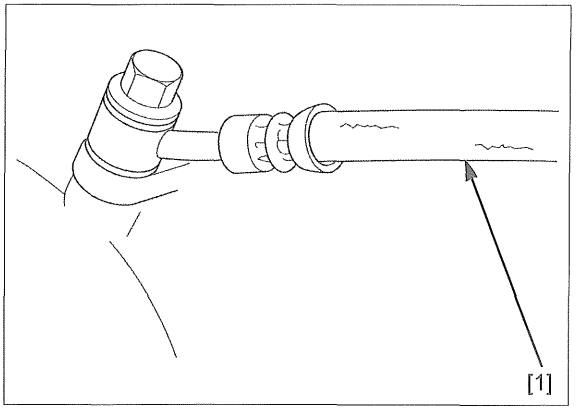

BRAKE LEVER ADJUSTMENT

The distance between the brake lever and the grip can be adjusted by turning the adjuster [1].

NOTE:

- Align the "△" mark [2] on the brake lever with the index number on the adjuster.

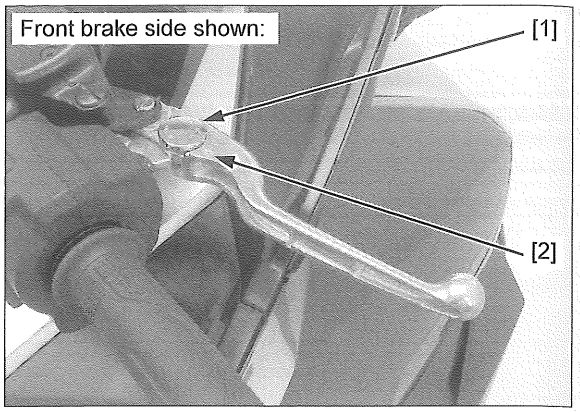

BRAKE LOCK OPERATION

NOTE:

- If the parking brake cable is replaced, operate the parking brake lever more than 10 times to obtain the initial extension of the cable. After obtaining the initial extension of the cable, adjust the parking brake cable.

INSPECTION

Place the motorcycle on its centerstand on a level surface.

Turn the rear wheel by hand and slowly pull the parking brake lever. It is normal that the parking brake starts to work when the end of lever [1] is between the marks [2] on the cap.

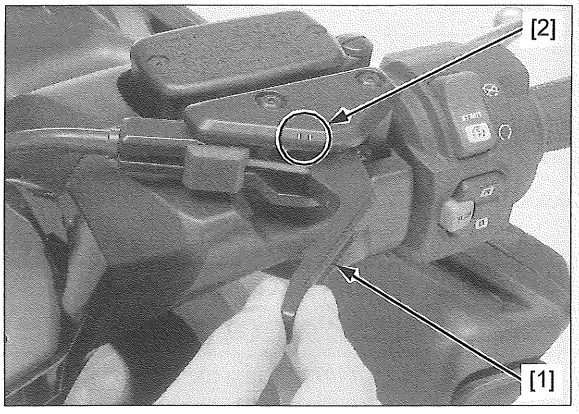

If it does not operate properly, unlock the parking brake by returning its lever inside fully and measure the length between the brake arm and cable stay.

STANDARD [1]: 43 – 52 mm (1.7 – 2.0 in)

If the measurement is within standard, adjust the adjuster bolt/piston protrusion at the parking brake caliper (page 3-21).

If the measurement is out of standard, adjust the cable length at the cable adjuster (page 3-21).

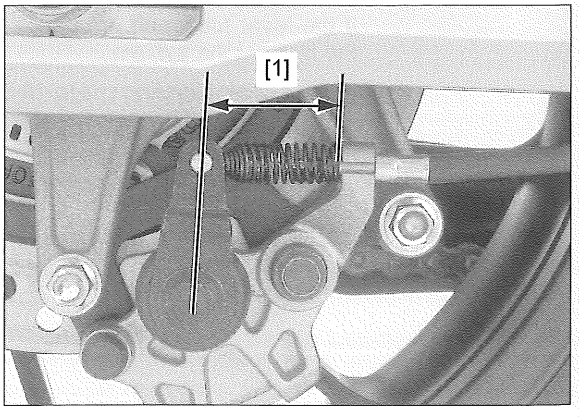

ADJUSTMENT

PARKING BRAKE CALIPER SIDE

Unlock the parking brake by returning its lever inside fully.

Remove the cap [1] and loosen the lock nut [2].

Adjust the adjuster bolt/piston [3] so that the parking brake starts to work when the end of lever is between the marks on the cap.

Hold the adjuster bolt/piston and tighten the nut to the specified torque.

TORQUE: 17 N·m (1.7 kgf·m, 13 lbf·ft)

Install the cap.

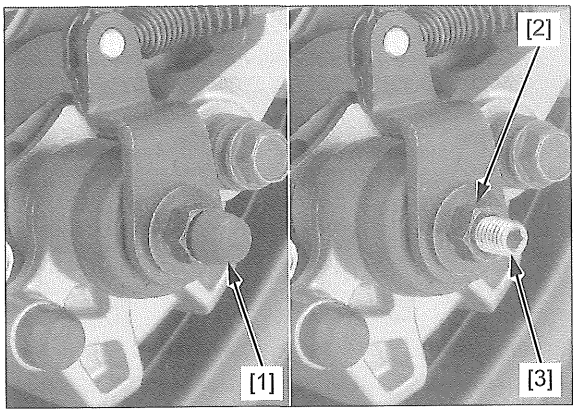

CABLE ADJUSTER SIDE

Remove the right floor skirt/floor step (page 2-14).

Unlock the parking brake by returning its lever inside fully.

Remove the band [1].

Slide the boot [2].

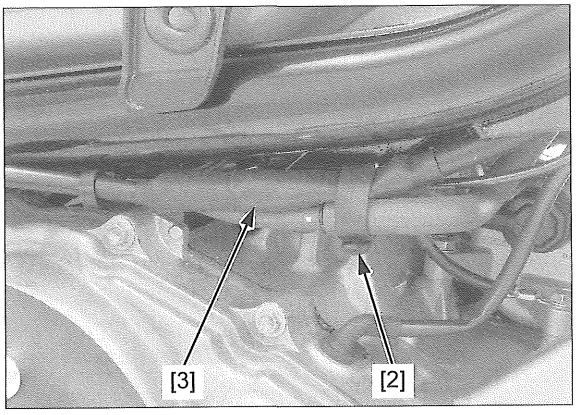

Loosen the lock nut [1] and turn the adjusting nut [2] so that the length between the brake arm and cable stay is standard.

STANDARD [3]: 43 mm (1.7 in)

Tighten the lock nut securely.

Install the removed parts in the reverse order of removal.

Adjust the adjuster bolt/piston protrusion at caliper side (page 3-21).

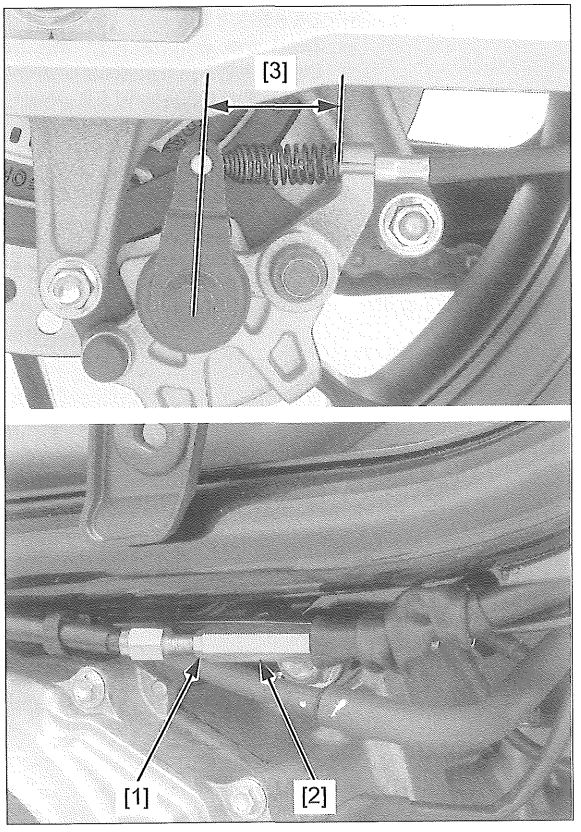

HEADLIGHT AIM

Support the motorcycle in an upright position.

Adjust the headlight aim vertically by turning the vertical beam adjusting screw [1].

Adjust horizontally by turning the horizontal adjusting screws [2].

NOTE:

- Adjust the headlight aim as specified by local laws and regulations.

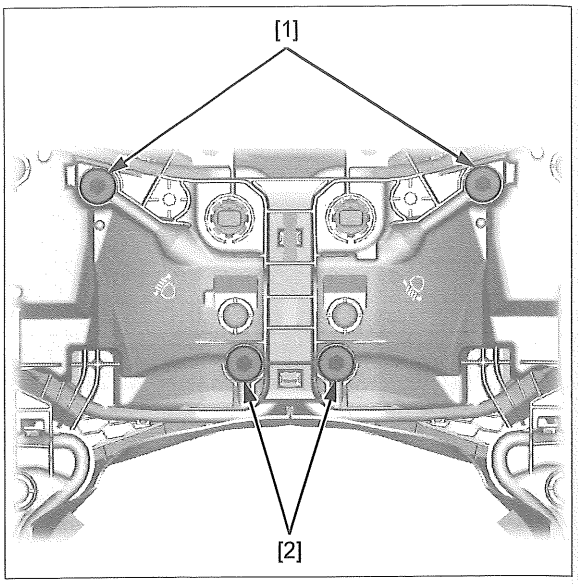

SIDESTAND

INSPECTION

Support the motorcycle using a safety stand or hoist.

Check the sidestand spring [1] for damage or loss of tension.

Check the sidestand [2] for freedom of movement and lubricate the sidestand pivot if necessary.

Check the sidestand ignition cut-off system:

- Sit astride the motorcycle and raise the sidestand.
- Start the engine with the transmission in neutral, then, shift the transmission into gear.
- Move the sidestand full down.
- The engine should stop as the sidestand is lowered.

If there is a problem with the system, check the sidestand switch (page 4-62).

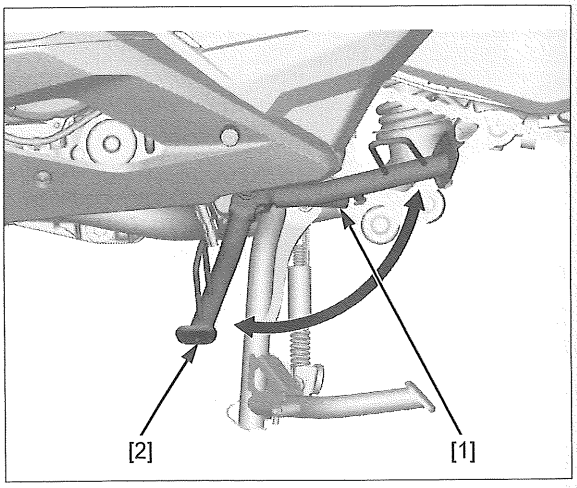

SUSPENSION

FRONT SUSPENSION INSPECTION

Check the action of the forks by operating the front brake and compressing the front suspension several times.

Check the entire assembly for signs of leaks, damage, or loose fasteners.

Replace damaged components which cannot be repaired.

NOTE:

- Loose, worn, or damaged suspension parts impair motorcycle stability and control.

Tighten all nuts and bolts.

For fork service (page 16-15)

REAR SUSPENSION INSPECTION

Check the action of the rear shock absorber by compressing the rear end several times.

Check the entire shock absorber assembly for leaks, damage, or loose fasteners.

Replace damaged components which cannot be repaired.

NOTE:

- Loose, worn, or damaged suspension parts impair motorcycle stability and control.

Tighten all nuts and bolts.

For shock absorber service (page 17-10)

REAR SUSPENSION ADJUSTMENT

SPRING PRE-LOAD ADJUSTER

NOTE:

- Do not turn the adjuster beyond its limits.
- Attempting to adjust directly from 1st position to 10th position or 10th to 1st may damage the shock absorber.

Spring pre-load can be adjusted by turning the adjuster [1].

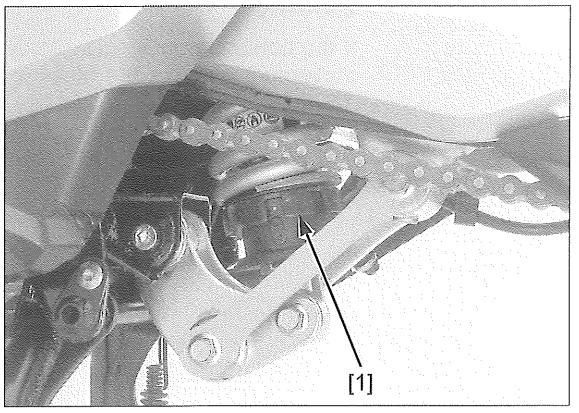

PRE-LOAD ADJUSTER ADJUSTABLE RANGE:
10 positions
PRE-LOAD ADJUSTER STANDARD POSITION (from minimum position):
4th position

SWINGARM INSPECTION

Support the motorcycle using a safety stand or hoist, and raise the rear wheel off the ground.

Check for worn swingarm bearings by grabbing the rear wheel and attempting to move the wheel side to side.

Replace the bearings if any looseness is noted.

For swingarm service (page 17-11).

NUTS, BOLTS, FASTENERS

Check that all chassis nuts, screws, and bolts are tightened to their correct torque values (page 1-10).

Check that all cotter pins, safety clips, hose clamps, and cable stays are in place and properly secured.

WHEELS/TIRES

Support the motorcycle securely and raise the front wheel off the ground.

Hold the fork leg and move the front wheel sideways with force to see if the wheel bearings are worn.

Front wheel service (page 16-11).

Support the motorcycle securely and raise the rear wheel off the ground.

Hold the swingarm and move the rear wheel sideways with force to see if the final gear bearings are worn.

Rear wheel service (page 17-4).

Check the tire pressure when the tires are cold.

- Front tire pressure: (page 1-8)
- Rear tire pressure: (page 1-8)

Check the tires for cuts, embedded nails, or other damage.

STEERING HEAD BEARINGS

Support the motorcycle using a safety stand or hoist and raise the front wheel off the ground.

Check that the handlebar moves freely from side to side. Make sure the control cables do not interfere with the handlebar rotation.

Check for steering stem bearings by grabbing the fork legs and attempting to move the front fork forward to backward.

If the handlebar moves unevenly, binds, or has vertical movement, inspect the steering head bearings (page 16-2).

SERVICE INFORMATION 4-2

PGM-FI SYSTEM LOCATION 4-3

PGM-FI SYSTEM DIAGRAM 4-4

PGM-FI TROUBLESHOOTING INFORMATION 4-5

PGM-FI SYMPTOM TROUBLESHOOTING 4-9

DTC INDEX 4-10

PGM-FI SYSTEM DTC TROUBLESHOOTING 4-13

MIL CIRCUIT TROUBLESHOOTING 4-54

ECM/TCM 4-55

VS SENSOR 4-57

MAP SENSOR 4-57

IAT SENSOR 4-58

ECT SENSOR 4-58

BANK ANGLE SENSOR 4-59

CKP SENSOR 4-60

A/F SENSOR 4-61

SIDESTAND SWITCH 4-62

SERVICE INFORMATION

GENERAL

- This section covers electrical system service of the PGM-FI system. For other service and fuel supply system, see Fuel System section (page 7-2).
- A faulty PGM-FI system is often related to poorly connected or corroded connectors. Check those connections before proceeding.
- The PGM-FI system is equipped with the Self-Diagnostic System (page 4-5). If the MIL lights or blink, follow the Self-Diagnostic Procedures to remedy the problem.
- When checking the PGM-FI, always follow the steps in the troubleshooting flow chart.
- For PGM-FI system location (page 4-3)
- Use a digital tester for PGM-FI system inspection.
- The following component information
  - Honda SMART Key SYSTEM (page 22-2)
  - Ignition coil (page 5-9)
  - Main relay/engine stop relay/starter relay/fuel pump relay/fan control relay/DCT relay/SUB VB relay/TBW relay (page 21-22)
  - APS (page 21-17)
- The following color codes are used throughout this section.

Be = Beige	Bl = Black	Br = Brown	Bu = Blue	G = Green	Gr = Gray	Lb = Light blue
Lg = Light green	O = Orange	P = Pink	R = Red	V = Violet	W = White	Y = Yellow

CONVERSION BETWEEN TYPES WITH OR WITHOUT ENGINE OUTPUT LIMITATIONS

NOTE:

- If the ECM has a DTC, the conversion does not work.
- When connecting the GST, the conversion does not work.

Connect the MCS (page 4-6), perform the conversion.

NOTE:

- Refer to the MCS instruction manual for the ECM and TCM Update procedure.

PGM-FI SYSTEM LOCATION

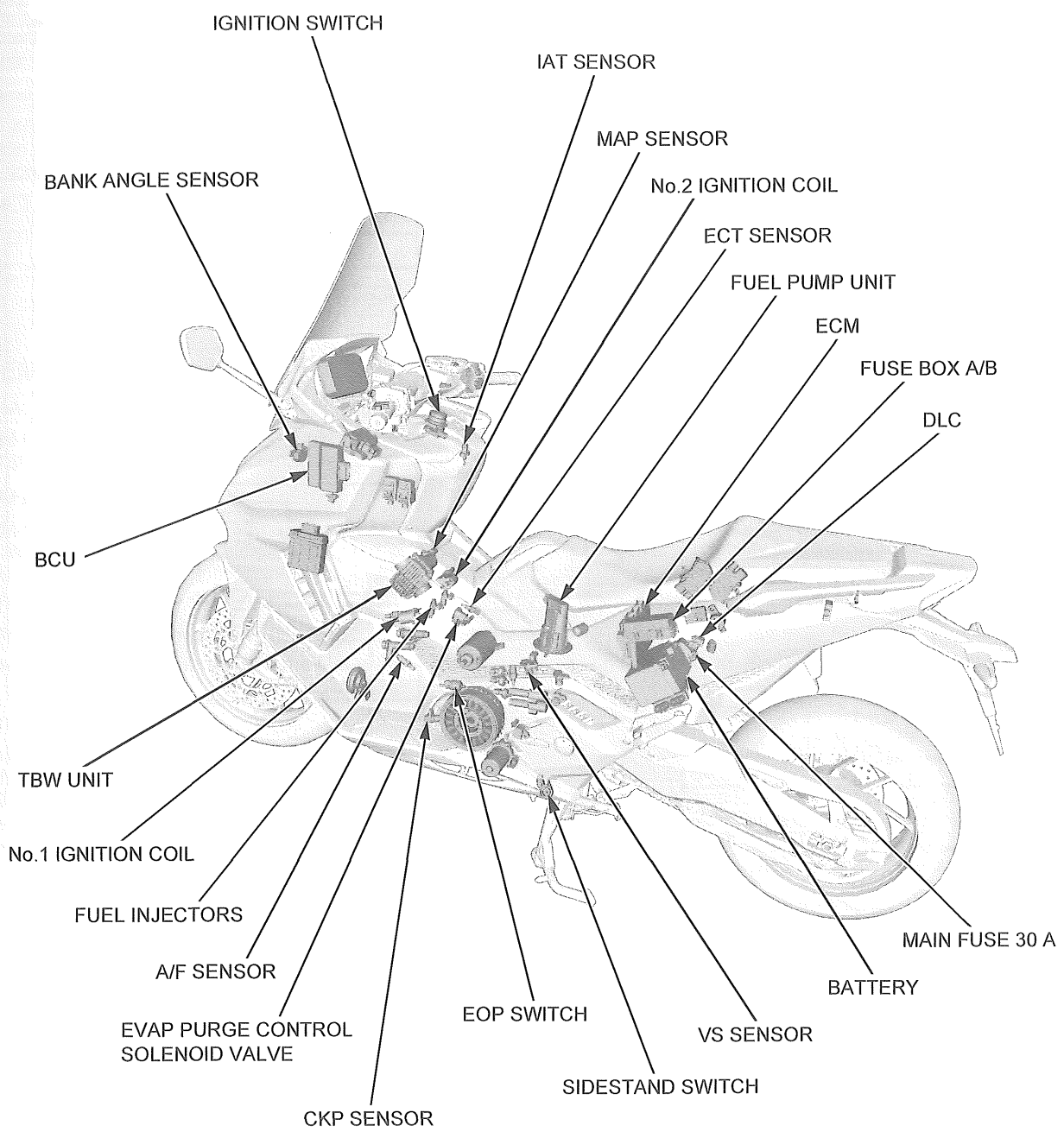

PGM-FI SYSTEM DIAGRAM

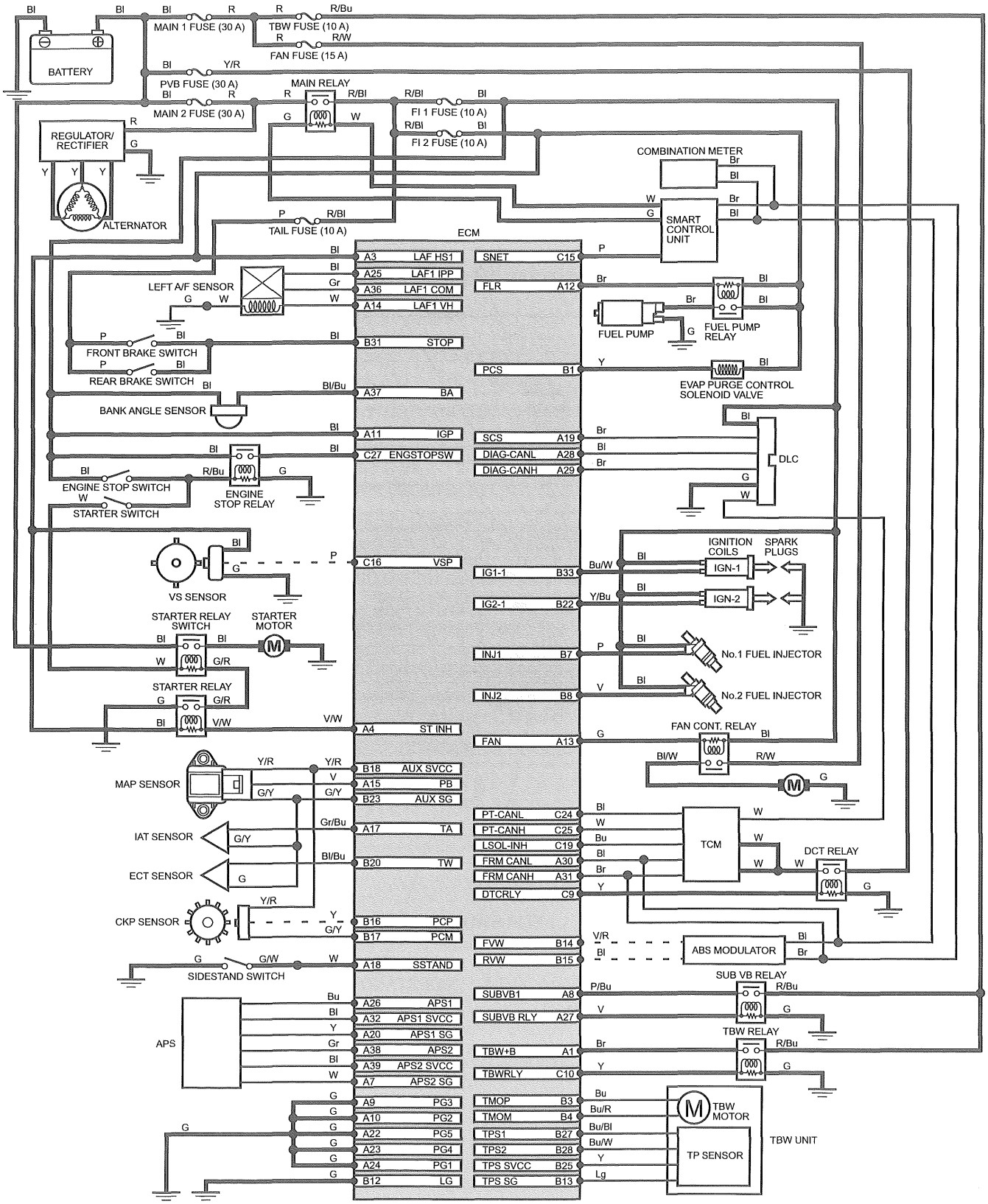

ECM 39P (Black) CONNECTOR A

ECM 33P (Black) CONNECTOR B

ECM 33P (Gray) CONNECTOR C

PGM-FI TROUBLESHOOTING INFORMATION

GENERAL TROUBLESHOOTING

Intermittent Failure

The term "intermittent failure" means a system may have had a failure, but it checks OK now. If the MIL does not come on, check for poor contact or loose pins at all connectors related to the circuit that of the troubleshooting. If the MIL was on, but then went out, the original problem may be intermittent.

Opens and Shorts

"Opens" and "Shorts" are common electrical terms. An open is a break in a wire or at a connection. A short is an accidental connection of a wire to ground or to another wire. In simple electronics, this usually means something will not work at all. With ECM this can something mean something work, but not the way it's supposed to.

If the MIL has come on

Refer to DTC READOUT (page 4-6).

If the MIL did not stay on

If the MIL did not stay on, but there is a driveability problem, do the SYMPTOM TROUBLESHOOTING (page 4-9).

SYSTEM DESCRIPTION

SELF-DIAGNOSIS SYSTEM

The PGM-FI system is equipped with the self-diagnostic system. When any abnormality occurs in the system, the ECM turns on the MIL and stores a DTC in its erasable memory.

FAIL-SAFE FUNCTION

The PGM-FI system is provided with a fail-safe function to secure a minimum running capability even when there is trouble in the system. When any abnormality is detected by the self-diagnosis function, running capability is maintained by pre-programed value in the simulated program map. When any abnormality is detected in the fuel injector, the fail-safe function stops the engine to protect it from damage.

MIL Check

When the ignition switch is turned ON, the MIL will stay on for a few seconds, then go off. If the MIL does not come on, troubleshoot the MIL circuit (page 4-54).

MIL Blink Pattern

- If the MCS is not available, DTC can be read from the ECM memory by the MIL blink pattern.
- The MIL will blink the current DTC by shorting SCS circuit (reading DTC with DLC connector).
- The MIL has two types of blinks, a long blink and short blink. The long blinking lasts for 1.2 seconds, the short blinking lasts for 0.4 seconds. One long blink is the equivalent of ten short blinks. For example, when three long blinks are followed by six short blinks, the DTC is 36 (three long blinks = 30 blinks, plus six short blinks).
- When the ECM stores more than one DTC, the MIL will indicate them by blinking in the order from the lowest number to highest number.

CURRENT DTC/STORED DTC

The DTC is indicated in two ways according to the failure status.

- In case the ECM detects the problem at present, the MIL will come on.
- In case the ECM does not detect any problem at present but has a problem stored in its memory, the MIL will not come on. If it is necessary to retrieve the past problem, readout the stored data by following the DTC readout procedure (page 4-6).

GST (General Scan Tool) INFORMATION

- The GST can readout the DTC, stored data, current data and other ECM condition.

How to connect the GST

Turn the ignition switch OFF.

Remove the maintenance lid (page 20-5).

Unhook the dummy connector [1] from the connector clip [2] and remove it from the DLC [3].

Connect the special tool to the DLC.

Connect the GST to the special tool.

Turn the ignition switch ON.

Check the DTC and stored data.

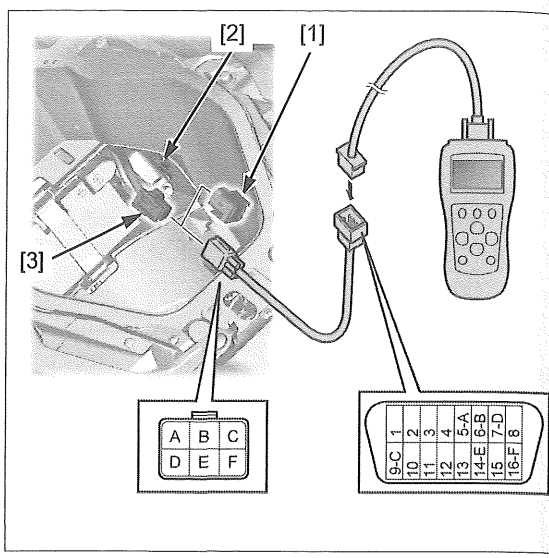

OBD harness circuit connection (General allocation in ISO 15031-3)

	DLC 6P	16P
Signal ground	A	5
CAN_H	B	6
Discretionary (SCS line)	C	9
K-line	D	7
CAN_L	E	14
Permanent positive battery	F	16

MCS INFORMATION

- The MCS can readout the DTC, stored data, current data, and other ECM condition.

How to connect the MCS

Turn the ignition switch OFF.

Remove the dummy connector from the DLC (page 4-6).

Connect the MCS to the DLC.

Turn the ignition switch ON, and check the DTC and stored data.

NOTE:

- The stored data indicates the engine conditions when the first malfunction was detected.

DTC READOUT

Start the engine and check the MIL.

NOTE:

- If the engine will not start, turn the starter motor for more than 10 seconds and check that the MIL comes on.

If the MIL stays on, connect the GST or MCS to the DLC.

– Connecting GST: page 4-6
– Connecting MCS: page 4-6

Read the DTC, stored data and follow the DTC index (page 4-10).

To read the DTC with the MIL blinking, refer to the following procedure.

Reading DTC with the MIL

Turn the ignition switch OFF.

Remove the dummy connector [1] from the DLC [2].

Short the DLC terminals using a special tool.

TOOL:
SCS short connector [3] **070MZ-0010300**

CONNECTION: Brown – Green

Turn the ignition switch ON, read, note the MIL blinks and refer to the DTC index (page 4-10).

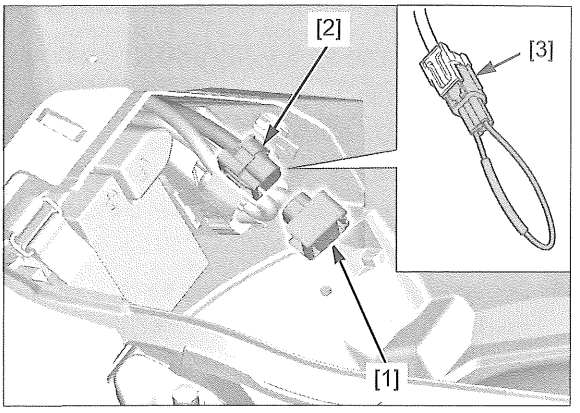

Reading current DTC with the combination meter

Turn the ignition switch ON.

1. Push and hold the SEL switch [1] to the right until the SETTING mode is displayed.
2. Push the down side of the SEL switch to select the SERVICE menu, and push it to the right.
3. Push the down side of the SEL switch to select the DTC menu, and push it to the right.
   The CURRENT DTC(s) will be displayed.

Read the current DTC(s) and follow the DTC index (page 4-10).

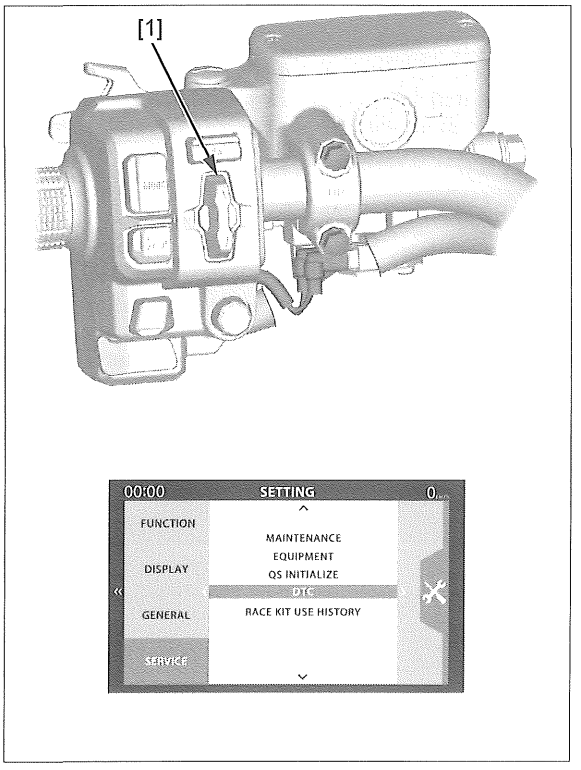

Reading stored DTC with the combination meter

Short the DLC terminals using a special tool (page 4-7).

Perform the same procedures as "Reading current DTC with combination meter (page 4-7).

The HISTORY DTC(s) will be displayed.

ERASING DTC

NOTE:

- When performing the ERASING DTC procedure, DTC(s) of DCT system are erased at the same time.

Erase the DTC with the GST or MCS while the engine is stopped.

To erase the DTC without GST or MCS, refer to the following procedure.

How to erase the DTC with SCS short connector

1. Connect the SCS short connector to the DLC (page 4-6).
2. Turn the ignition switch ON.
3. Disconnect the SCS short connector [1] from the DLC [2].

   Connect the SCS short connector to the DLC again while the MIL stays ON about 5 seconds (reset receiving pattern).
4. The stored DTC is erased if the MIL goes off and starts blinking (successful pattern).

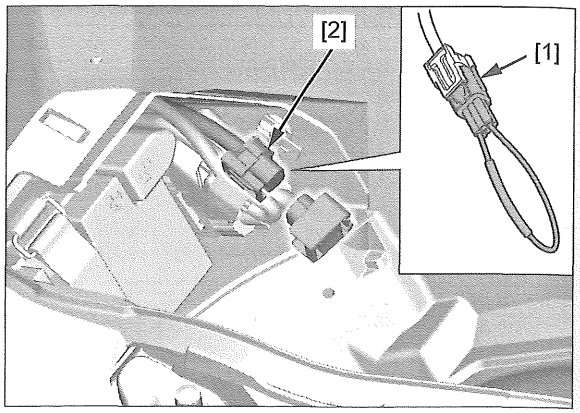

NOTE:

- The DLC must be jumped while the MIL lights. If not, the MIL will not start blinking. In that case, turn the ignition switch OFF and try again.
- Note that the self-diagnostic memory cannot be erased if the ignition switch is turned OFF before the MIL starts blinking.

CIRCUIT INSPECTION

INSPECTION AT ECM CONNECTOR

- Always clean around and keep any foreign material away from the ECM connector before disconnecting it.
- A faulty PGM-FI system is often related to poorly connected or corroded terminals. Check those connections before proceeding.
- In testing at ECM connector(s) (wire harness side) terminal, always use the test probe [1]. Insert the test probe into the connector terminal, then attach the digital multimeter probe to the test probe.

TOOL:

Test probe	**07ZAJ-RDJA110**

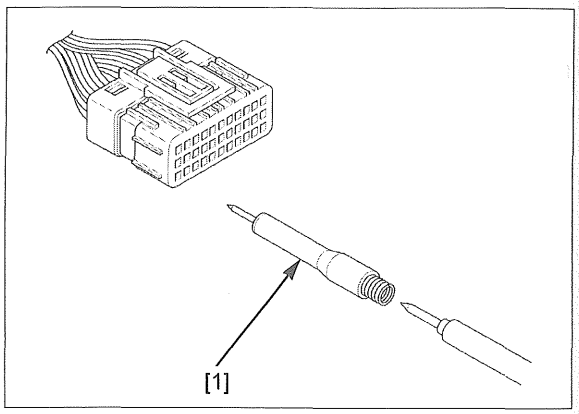

PGM-FI SYMPTOM TROUBLESHOOTING

When the motorcycle has one of these symptoms, check the DTC or MIL blinking, refer to the DTC index (page 4-10)and begin the appropriate troubleshooting procedure. If there are no DTC/MIL blinking stored in the ECM memory, do the diagnostic procedure for the symptom, in sequence listed below, until you find the cause.

Symptom	Diagnosis procedure	Also check for
Engine cranks but won't start (No DTC and MIL blinking)	1. Check the spark plug condition (page 3-6). 2. Check the ignition system (page 5-6). 3. Check the cylinder compression (page 10-4).	◦ No fuel to fuel injector – Clogged fuel filter – Pinched or clogged fuel feed hose – Pinched or clogged fuel tank breather hose ◦ Intake air leak ◦ Contaminated/deteriorated fuel ◦ Faulty fuel injector
Engine cranks but won't start (No fuel pump operation sound when the turning the ignition ON)	1. Check the ECM power/ground circuits (page 4-56). 2. Check the fuel pump (page 7-7).	
Engine stalls, hard to start, rough idling	1. Check the engine idle speed (page 3-12). 2. Check the fuel supply system (page 7-3). 3. Inspect the ignition system (page 5-6).	◦ Restricted fuel feed hose ◦ Contaminated/deteriorated fuel ◦ Intake air leak ◦ Restricted fuel tank breather hose
Afterburn when engine braking is used	Check the ignition system (page 5-6).	
Backfiring or misfiring during acceleration	Check the ignition system (page 5-6).	
Poor performance (driveability) and poor fuel economy	1. Check the fuel supply system (page 7-3). 2. Check the air cleaner element (page 3-5). 3. Check the ignition system (page 5-6).	◦ Faulty pressure regulator (fuel pump) ◦ Faulty fuel injector
Idle speed is below specifications or fast idle too low (No DTC and MIL blinking)	1. Inspect the engine idle speed (page 3-12). 2. Inspect the ignition system (page 5-6).	
Idle speed is above specifications or fast idle too high (No DTC and MIL blinking)	1. Inspect the engine idle speed (page 3-12). 2. Inspect the throttle operation (page 3-4). 3. Inspect the ignition system (page 5-6).	◦ Intake air leak ◦ Engine top-end problem ◦ Air cleaner element condition
MIL stays on but no DTCs set	Inspect the MIL circuit (page 4-54).	

DTC INDEX

NOTE:

- When using GST or MCS, check the lighting or blinking state of the MIL, and then refer to DTC index.
- About Diagnostic Trouble Codes other than in this DTC INDEX, refer to DCT DTC INDEX (page 11-9).
- Follow the prior diagnosis notes before performing the troubleshooting, refer to the PRIOR DIAGNOSIS (page 4-13).

DTC	Meter display/ MIL blinks	Detected D/C (Driving Cycle)	Function failure	Refer to page
P0031	38	1	A/F Sensor Heater Control Circuit Low (A/F sensor heater circuit low voltage)	4-14
P0032	38	1	A/F Sensor Heater Control Circuit High (A/F sensor heater circuit high voltage)	
P00D1	38	1	A/F Sensor Heater Control Circuit Performance Problem (A/F sensor heater control circuit range/performance)	4-15
P0105	1	2	MAP Sensor Circuit (MAP sensor stuck)	4-15
P0106	1	2	MAP Sensor Circuit Range Problem (MAP sensor circuit range/performance)	4-16
P0107	1	1	MAP Sensor Circuit Low (MAP sensor circuit low voltage)	4-16
P0108	1	1	MAP Sensor Circuit High (MAP sensor circuit high voltage)	
P0111	9	2	IAT Sensor Circuit High Range Problem (IAT sensor circuit range/performance)	4-17
P0112	9	1	IAT Sensor Circuit Low (IAT sensor circuit low voltage)	4-18
P0113	9	1	IAT Sensor Circuit High (IAT sensor circuit high voltage)	
P0115	7	2	ECT Sensor Circuit (ECT sensor stuck)	4-19
P0117	7	1	ECT Sensor Circuit Low (ECT sensor circuit low voltage)	4-19
P0118	7	1	ECT Sensor Circuit High (ECT sensor circuit high voltage)	
P011B	132	2	ECT Sensor Intake Air Temperature Correlation (Engine coolant temperature correlation)	4-21
P0121	71	1	TP Sensor 1 Circuit Range Problem (TP sensor 1 circuit range/performance)	4-22
P0122	71	1	TP Sensor Circuit Low (TP sensor 1 low voltage)	4-22
P0123	71	1	TP Sensor Circuit High (TP sensor 1 high voltage)	
P0125	7	2	Insufficient Coolant Temperature for Closed Loop Fuel Control	4-24
P0131	36	1	O2/AF Sensor Circuit Low Voltage (A/F sensor circuit low voltage)	4-24
P0132	36	1	O2/AF Sensor Circuit High Voltage (A/F sensor circuit high voltage)	
P0133	36	2	O2/AF Sensor Circuit No Activity Detected (A/F sensor circuit slow response)	4-26
P0134	36	1	O2/AF Sensor Circuit No Activity Detected (A/F sensor circuit no activity detected)	
P0201	12	1	Cylinder 1 Injector Circuit (No.1 fuel injector circuit malfunction)	4-26
P0202	13	1	Cylinder 2 Injector Circuit (No.2 fuel injector circuit malfunction)	
P0221	72	1	TP Sensor 2 Circuit Range Problem (TP sensor 2 circuit range/performance)	4-28
P0222	72	1	TP Sensor 2 Circuit Low (TP sensor 2 low voltage)	4-28
P0223	72	1	TP Sensor 2 Circuit High (TP sensor 2 high voltage)	

DTC	Meter display/ MIL blinks	Detected D/C (Driving Cycle)	Function failure	Refer to page
P0300	133	1	Random/Multiple Cylinder Misfire Detected (Random/multiple cylinder misfire detected A) (When the MIL is blinking)	4-29
	133	2	Random/Multiple Cylinder Misfire Detected (Random/multiple cylinder misfire detected B) (When the MIL is lighting)	
P0315	142	1	CKP Sensor Variation Not Learned (Crankshaft position system variation not learned)	4-30
P0351	91	1	Ignition Coil 1 Primary Control Circuit Open (No.1 ignition coil primary circuit malfunction)	4-30
P0352	92	1	Ignition Coil 2 Primary Control Circuit Open (No.2 ignition coil primary circuit malfunction)	
P0443	88	1	EVAP System Purge Control Valve Circuit (EVAP purge control solenoid valve malfunction)	4-32
P0500	67	1	VSP Sensor 1 Malfunction (Front wheel speed sensor malfunction)	4-33
P0562	126	1	System Voltage (SUB VB relay malfunction)	4-34
P0606	84	1	Control Module Processor (CPU in the ECM malfunction)	4-35
P062F	33	1	ICM EEPROM Error (ECM EEPROM malfunction)	4-36
P064D	131	1	ICM O2 Sensor CPU Performance Problem (A/F Sensor IC Circuit Abnormal)	4-36
P0686	126	1	ECM/PCM Power Relay Control Circuit Low (SUB VB relay stuck OFF)	4-34
P0687	126	1	ECM/PCM Power Relay Control Circuit High (SUB VB relay stuck ON)	
P0722	11	1	OS Sensor Circuit No Signal (VS sensor no signal)	4-37
P1000	54	1	Bank Angle Sensor Circuit Low (Bank angle sensor circuit low voltage)	4-38
P1001	54	1	Bank Angle Sensor Circuit High (Bank angle sensor circuit high voltage)	
P1658	85	1	TBW Switch Malfunction (ON Side) (TBW relay malfunction (ON Side))	4-40
P1659	85	1	TBW Switch Malfunction (OFF Side) (TBW relay malfunction (OFF Side))	
P1684	77	1	TBW Switch Malfunction (TBW return spring malfunction)	4-41
P1712	84	1	TCM CPU Malfunction (CPU malfunction in the TCM)	4-42
P2101	79	1	Throttle Actuator Circuit Performance Problem (TBW system control correlation failure)	4-42
P2118	78	1	Throttle Actuator Current Performance Problem (TBW motor malfunction)	
P2121	74	1	APS 1 Sensor Circuit Range Problem (APS 1 circuit range/performance)	4-43
P2122	74	1	APS 1 Sensor Circuit Low (APS 1 low voltage)	4-44
P2123	74	1	APS 1 Sensor Circuit High (APS 1 high voltage)	
P2126	75	1	APS 2 Sensor Circuit Range Problem (APS 2 circuit range/performance)	4-43
P2127	75	1	APS 2 Sensor Circuit Low (APS 2 low voltage)	4-45
P2128	75	1	APS 2 Sensor Circuit High (APS 2 high voltage)	
P2135	73	1	TP Sensor 1/2 Voltage Correlation (TP sensors 1 and 2 voltage correlation malfunction)	4-46
	73	1	TP Sensor 1/2 Voltage Correlation (TP sensors 1 and 2 short circuit)	
P2138	76	1	APS 1/2 Sensor Voltage Correlation (APS 1 and 2 voltage correlation malfunction)	4-47

DTC	Meter display/ MIL blinks	Detected D/C (Driving Cycle)	Function failure	Refer to page
P2158	66	1	VSP Sensor 2 Malfunction (Rear wheel speed sensor malfunction)	4-48
P2195	36	2	O2/AF Sensor Signal Biased/stuck Lean (A/F sensor signal biased/stuck lean)	4-49
P2196	36	2	O2/AF Sensor Signal Biased/stuck Rich (A/F sensor signal biased/stuck rich)	
P2A00	36	2	O2/AF Sensor Circuit Range Problem (A/F sensor circuit range/performance)	4-49
U0001	103	1	CAN Communication Malfunction (CAN communication malfunction)	4-50
U0155	103	1	CAN Communication Malfunction (TCM-GCM) (Combination meter CAN communication malfunction)	4-52
U0168	103	1	CAN Communication Malfunction (Smart) (Smart control unit CAN communication malfunction)	4-52
U019E	112	1	CAN Communication Malfunction (PTCAN) (Power train CAN communication malfunction)	4-53

PGM-FI SYSTEM DTC TROUBLESHOOTING

PRIOR DIAGNOSIS

Before processing the DTC troubleshooting, check as follows:

- Check for loose or poor contact on the DTC related connectors (each sensor, solenoid, unit etc.), then recheck the DTC.
- Erase the DTC (page 4-8) and recheck it.
- Refer to probable cause of each detected DTC and check the listed items first. If possible, correct the abnormality.

NOTE:

- Always turn the ignition switch OFF when checking the continuity of the circuit and before disconnecting the connectors.
- Some DTCs have a recheck function, so that the priority DTC is detected when the ignition switch is switched from OFF to ON. Wait for 10 seconds and check the DTC again.
- Some detected DTCs stop functions such as HSTC and quick shifter.

COMMON TROUBLESHOOTING INFORMATION

NOTE:

- Always use the test probe when inspecting at the ECM, TCM, ABS modulator, BCU and smart control unit connectors.

TOOL:
Test probe **07ZAJ-RDJA110**

- If the ECM is replaced, perform the following:
  - CKP sensor initialize learning procedure (page 4-60)
  - Immobilizer authentication ID number registration procedure (page 22-18)
- If the CKP sensor is removed, perform the crank pulse learning reset procedure (page 4-60).
- When performing the test-ride in the procedure of the troubleshooting, set the motorcycle to the preferred value as below chart. Conduct a test-ride with your confirmation.

Motorcycle speed:	**About 60 km/h (37 mph)**
Running time:	**1 minute or more**
Engine revolution:	**4,000 – 7,500 min^{-1} (rpm)**
Throttle opening angle:	**14 degrees or more**

If the test-ride cannot be performed, replace parts that may be abnormal.

DTC P0031/P0032

Probable cause:

- Faulty A/F sensor heater or its related circuits
- Faulty ECM

Symptom/Fail-safe function:

- Fuel consumption deterioration
- Detected value feedback stops

1. **A/F Sensor Heater Output Line Open Circuit Inspection**

   Disconnect the ECM 39P connector (page 4-55).
   Disconnect the A/F sensor 4P connector (page 4-61).
   Check for continuity between the wire harness side 39P connector [1] and 4P connector [2].

   Connection: White – A14

   Is there continuity?

   YES – GO TO STEP 2.

   NO – Open circuit in the White wire

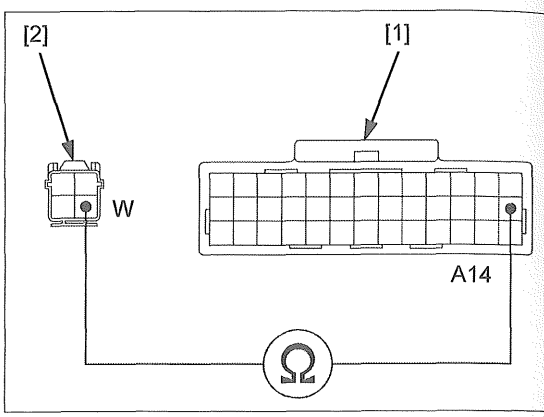

2. **A/F Sensor Heater Output Line Short Circuit Inspection**

   Check for continuity between the wire harness side 4P connector [1] and ground.

   Connection: White – Ground

   Is there continuity?

   YES – Short circuit in the White wire

   NO – GO TO STEP 3.

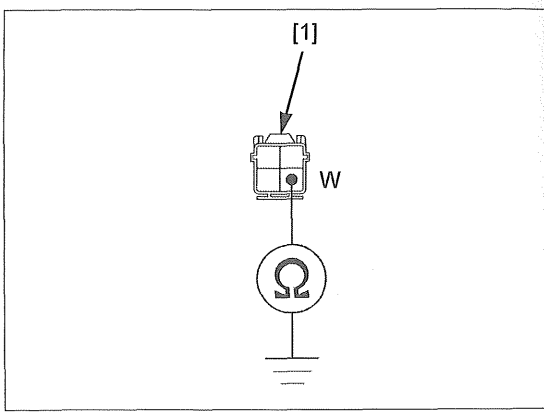

3. **A/F Sensor Heater Ground Line Open Circuit Inspection**

   Check for continuity between the wire harness side 4P connector [1] and ground.

   Connection: Green – Ground

   Is there continuity?

   YES – GO TO STEP 4.

   NO – Open circuit in the Green wire

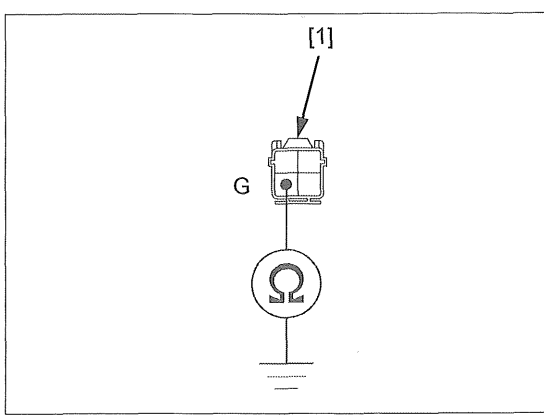

4. **A/F Sensor Inspection**

Replace the A/F sensor with a new one (page 4-61).
Connect the disconnected connector(s).
Erase the DTC (page 4-8).
Start the engine and wait for a minute.
Check the DTC with GST or MCS.

Is same DTC indicated?

YES – Replace the ECM with a new one (page 4-55), and recheck.

NO – Faulty original A/F sensor

DTC P00D1

Probable cause:

- Faulty A/F sensor heater
- Faulty ECM

Symptom/Fail-safe function:

- Fuel consumption deterioration
- Detected value feedback stops

1. **A/F Sensor Inspection**

Replace the A/F sensor with a new one (page 4-61).
Erase the DTC (page 4-8).
Start the engine and wait for a minute.
Check the DTC with GST or MCS.

Is same DTC indicated?

YES – Replace the ECM with a new one (page 4-55), and recheck.

NO – Faulty original A/F sensor

DTC P0105

Probable cause:

- Faulty MAP sensor
- Loose or poor connection of the MAP sensor hose
- Clogged MAP sensor hose
- Faulty ECM

Symptom/Fail-safe function:

- Rough idling
- Driveability deterioration

1. **MAP Sensor Inspection**

Replace the MAP sensor with a new one (page 4-57).
Erase the DTC (page 4-8).
Start the engine and wait for three seconds.
Check the DTC with GST or MCS.

Is same DTC indicated?

YES – Replace the ECM with a new one (page 4-55), and recheck.

NO – Faulty original MAP sensor

DTC P0106

Probable cause:

- Faulty MAP sensor
- Contaminated intake manifold or throttle bore
- Faulty ECM

Symptom/Fail-safe function:

- Rough idling
- Driveability deterioration

1. MAP Sensor Inspection

Replace the MAP sensor with a new one (page 4-57).
Erase the DTC (page 4-8).
Start the engine and wait for three seconds.
Check the DTC with GST or MCS.

Is same DTC indicated?

YES – Replace the ECM with a new one (page 4-55), and recheck.

NO – Faulty original MAP sensor

DTC P0107/P0108

Probable cause:

- Faulty MAP sensor or its related circuits
- Faulty ECM

Symptom/Fail-safe function:

- Rough idling

1. MAP Sensor Input Voltage Inspection

Disconnect the MAP sensor 3P connector (page 4-57).
Temporarily install the ignition switch, starter relay switch and battery.
Turn the ignition switch ON.
Measure the voltage at the wire harness side 3P connector [1].

Connection: Yellow/red (+) – Green/yellow (–)

Is the voltage within 4.75 – 5.25 V?

YES – GO TO STEP 2.

NO –
- Open circuit in the Yellow/red wire
- Open circuit in the Green/yellow wire
- If the wires are OK, replace the ECM with a new one (page 4-55), and recheck.

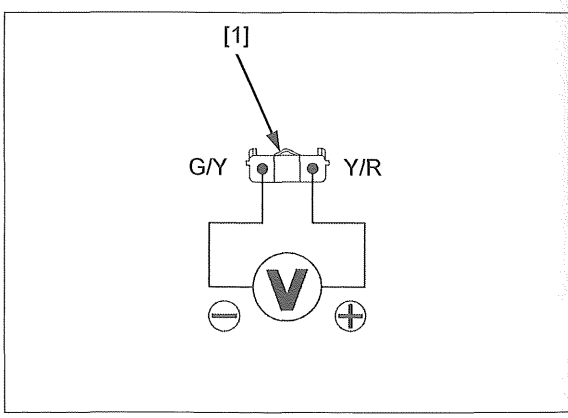

2. MAP Sensor Output Line Open Circuit Inspection

Turn the ignition switch OFF.
Disconnect the ECM 39P connector (page 4-55).
Check for continuity between the wire harness side 3P connector [1] and 39P connector [2].

Connection: Violet – A15

Is there continuity?

YES – GO TO STEP 3.

NO – Open circuit in the Violet wire

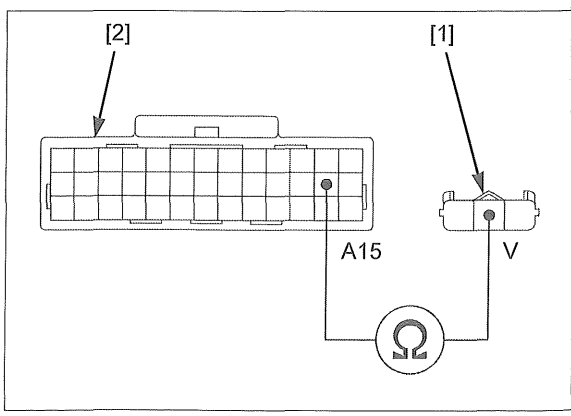

3. **MAP Sensor Output Line Short Circuit Inspection**

Check for continuity between the wire harness side 3P connector [1] and ground.

Connection: Violet – Ground

Is there continuity?

YES – Short circuit in the Violet wire

NO – GO TO STEP 4.

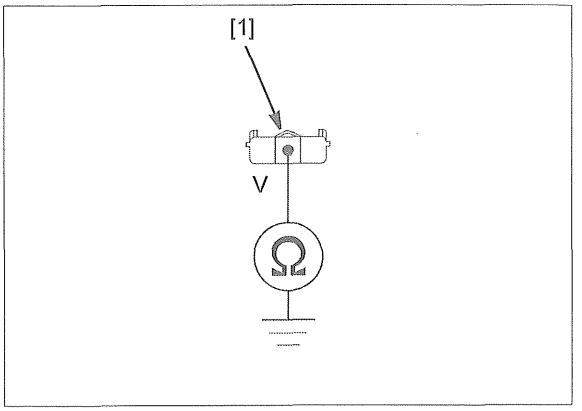

4. **MAP Sensor Inspection**

Replace the MAP sensor with a new one (page 4-57).
Connect the disconnected connector(s).
Erase the DTC (page 4-8).
Turn the ignition switch ON and wait for 10 seconds.
Check the DTC with GST or MCS.

Is same DTC indicated?

YES – Replace the ECM with a new one (page 4-55), and recheck.

NO – Faulty original MAP sensor

DTC P0111

Probable cause:

- Faulty IAT sensor
- Faulty ECM

Symptom/Fail-safe function:

- Engine operates normally

1. **IAT Sensor Inspection**

Replace the IAT sensor with a new one (page 4-58).
Erase the DTC (page 4-8).
Turn the ignition switch ON and wait for 10 seconds.
Check the DTC with GST or MCS.

Is same DTC indicated?

YES – Replace the ECM with a new one (page 4-55), and recheck.

NO – Faulty original IAT sensor

DTC P0112/P0113

Probable cause:

- Faulty IAT sensor or its related circuits
- Faulty ECM

Symptom/Fail-safe function:

- Engine operates normally

1. IAT Sensor Output Line Open Circuit Inspection

Disconnect the ECM 39P connector (page 4-55).
Disconnect the IAT sensor 2P connector (page 4-58).
Check for continuity between the wire harness side 2P connector [1] and 39P connector [2].

Connection: Gray/blue – A17

Is there continuity?

YES – GO TO STEP 2.

NO – Open circuit in the Gray/blue wire

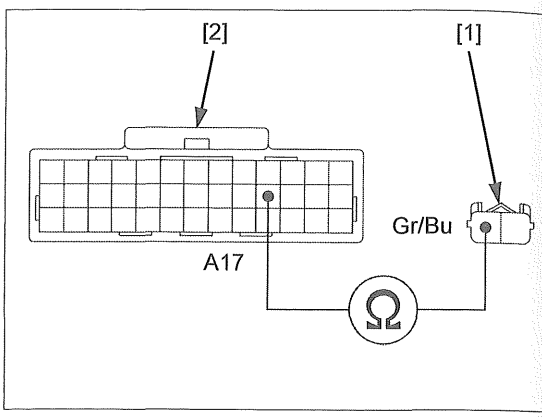

2. IAT Sensor Output Line Short Circuit Inspection

Check for continuity between the wire harness side 2P connector [1] and ground.

Connection: Gray/blue – Ground

Is there continuity?

YES – Short circuit in the Gray/blue wire

NO – GO TO STEP 3.

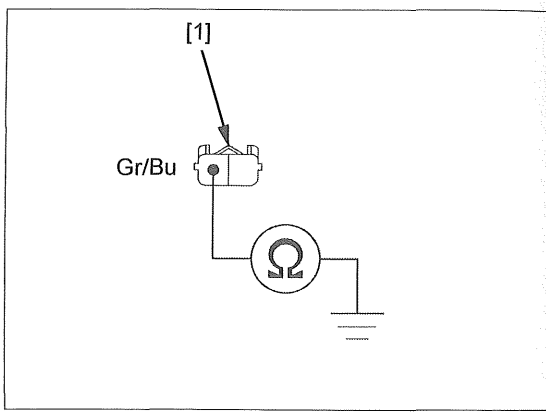

3. IAT Sensor Ground Line Open Circuit Inspection

Disconnect the ECM 33P (Black) connector (page 4-55).
Check for continuity between the wire harness side 2P connector [1] and 33P (Black) connector [2].

Connection: Green/yellow – B23

Is there continuity?

YES – GO TO STEP 4.

NO – Open circuit in the Green/yellow wire

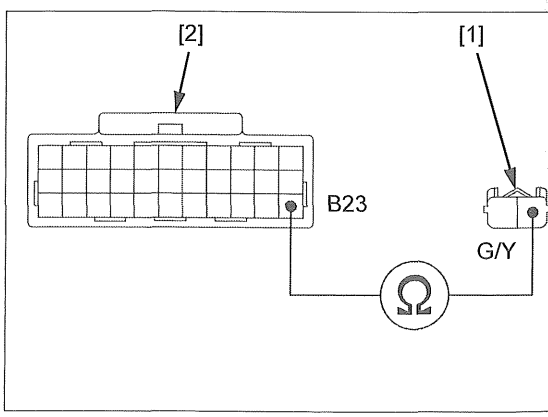

4. **IAT Sensor Inspection**

Replace the IAT sensor with a new one (page 4-58).
Erase the DTC (page 4-8).
Turn the ignition switch ON and wait for 10 seconds.
Check the DTC with GST or MCS.

Is same DTC indicated?

YES – Replace the ECM with a new one (page 4-55), and recheck.

NO – Faulty original IAT sensor

DTC P0115

Probable cause:

- Faulty ECT sensor
- Faulty ECM

Symptom/Fail-safe function:

- Hard to start at low temperature
- Exhaust gas too lean or too rich
- Fuel consumption deterioration
- Driveability deterioration

1. **ECT Sensor Inspection**

Replace the ECT sensor with a new one (page 4-58).
Erase the DTC (page 4-8).
Start the engine and leave it for 10 minutes.
Stop the engine and wait for an hour.
Check the DTC with GST or MCS.

Is same DTC indicated?

YES – Replace the ECM with a new one (page 4-55), and recheck.

NO – Faulty original ECT sensor

DTC P0117/P0118

Probable cause:

- Faulty ECT sensor or its related circuits
- Faulty ECM

Symptom/Fail-safe function:

- Hard to start at low temperature
- Driveability deterioration

1. **ECT Sensor Output Line Open Circuit Inspection**

Disconnect the ECM 33P (Black) connector (page 4-55).
Disconnect the ECT sensor 2P connector (page 4-58).
Check for continuity between the wire harness side 2P connector [1] and 33P (Black) connector [2].

Connection: Black/blue – B20

Is there continuity?

YES – GO TO STEP 2.

NO – Open circuit in the Black/blue wire

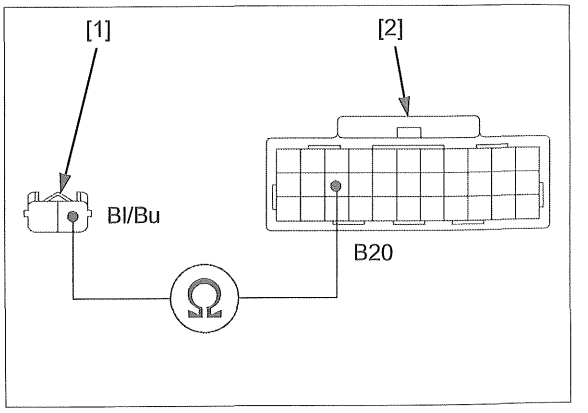

2. **ECT Sensor Output Line Short Circuit Inspection**

Check for continuity between the wire harness side 2P connector [1] and ground.

Connection: Black/blue – Ground

Is there continuity?

YES – Short circuit in the Black/blue wire

NO – GO TO STEP 3.

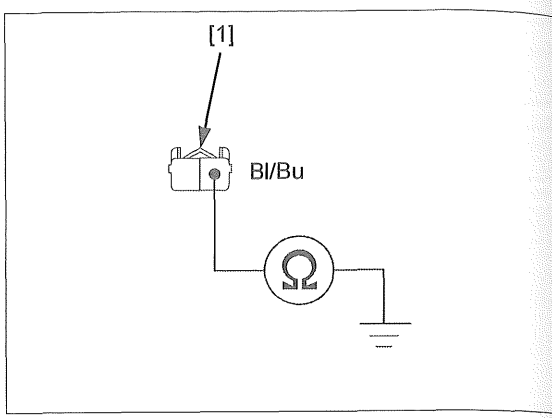

3. **ECT Sensor Ground Line Open Circuit Inspection**

Check for continuity between the wire harness side 2P connector [1] and 33P (Black) connector [2].

Connection: Green – B23

Is there continuity?

YES – GO TO STEP 4.

NO – Open circuit in the Green or Green/yellow wire

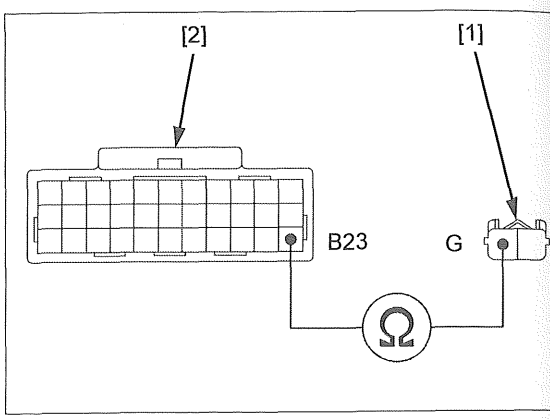

4. **ECT Sensor Inspection**

Replace the ECT sensor with a new one (page 4-58).
Erase the DTC (page 4-8).
Turn the ignition switch ON and wait for 10 seconds.
Check the DTC with GST or MCS.

Is same DTC indicated?

YES – Replace the ECM with a new one (page 4-55), and recheck.

NO – Faulty original ECT sensor

DTC P011B

Probable cause:

- Insufficient coolant (page 3-13)
- Faulty thermostat (page 8-5)
- Faulty water pump (page 8-10)
- Clogged coolant passage
- Faulty ECT sensor
- Faulty IAT sensor
- Faulty ECM

Symptom/Fail-safe function:

- Hard to start at low temperature
- Exhaust gas too lean or too rich
- Fuel consumption deterioration
- Driveability deterioration

NOTE:

- Before processing the DTC troubleshooting, stop the engine and leave it for 6 hours if the motorcycle is running.

1. **ECT Sensor Inspection**

   Replace the ECT sensor with a new one (page 4-58).
   Erase the DTC (page 4-8).
   Turn the ignition switch OFF and leave motorcycle for 6 hours. (Do not disconnect the battery cable.)
   Check the DTC with GST or MCS.

   Is same DTC indicated?

   YES – GO TO STEP 2.

   NO – Faulty original ECT sensor

2. **IAT Sensor Inspection**

   Replace the IAT sensor with a new one (page 4-58).
   Erase the DTC (page 4-8).
   Turn the ignition switch OFF and leave motorcycle for 6 hours. (Do not disconnect the battery cable.)
   Check the DTC with GST or MCS.

   Is same DTC indicated?

   YES – Replace the ECM with a new one (page 4-55), and recheck.

   NO – Faulty original IAT sensor

DTC P0121

Probable cause:

- Faulty TP sensor 1
- Faulty ECM

Symptom/Fail-safe function:

- Driveability deterioration
- Motorcycle speed is limited: approximately 120 km/h (75 mph)
- HSTC does not operate

1. **TP Sensor 1 Inspection**

   Replace the throttle body (TP sensor 1) (page 7-13) with a new one.
   Erase the DTC (page 4-8).
   Turn the ignition switch ON and wait for 10 seconds.
   Check the DTC with GST or MCS.

   Is same DTC indicated?

   YES – Replace the ECM with a new one (page 4-55), and recheck.

   NO – Faulty original TP sensor 1

DTC P0122/P0123

Probable cause:

- Faulty TP sensor 1 or its related circuits
- Faulty ECM

Symptom/Fail-safe function:

- Engine operates at idle speed
- HSTC does not operate

1. **TP Sensor 1 Input Voltage Inspection**

   Disconnect the TBW unit 6P connector (page 7-13).
   Temporarily install the ignition switch, starter relay switch and battery.
   Turn the ignition switch ON.
   Measure the voltage at the wire harness side 6P connector [1].

   Connection: Yellow (+) – Light green (–)

   Is about 5 V indicated?

   YES – GO TO STEP 2.

   NO – • Open circuit in the Yellow wire
   • Open circuit in the Light green wire
   • If the wires are OK, replace the ECM with a new one (page 4-55), and recheck.

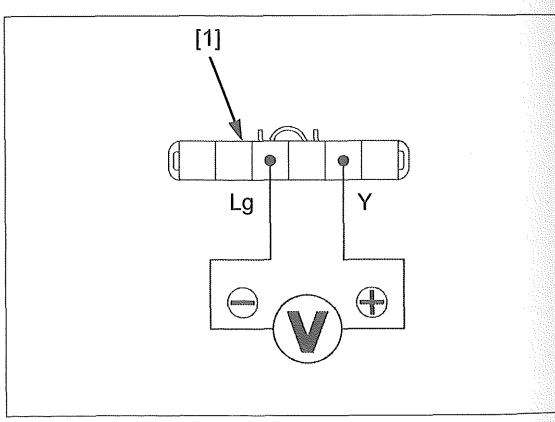

2. **TP Sensor 1 Output Line Open Circuit Inspection**

Turn the ignition switch OFF.
Disconnect the ECM 33P (Black) connector (page 4-55).
Check for continuity between the wire harness side 6P connector [1] and 33P (Black) connector [2].

Connection: Blue/black – B27

Is there continuity?

YES – GO TO STEP 3.

NO – Open circuit in the Blue/black wire

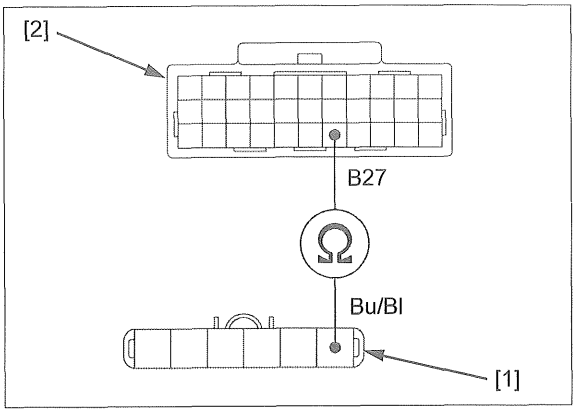

3. **TP Sensor 1 Output Line Short Circuit Inspection**

Check for continuity between the wire harness side 6P connector [1] and ground.

Connection: Blue/black – Ground

Is there continuity?

YES – Short circuit in the Blue/black wire

NO – GO TO STEP 4.

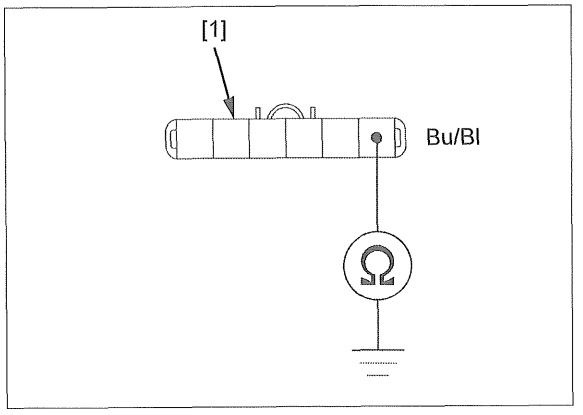

4. **TP Sensor 1 Inspection**

Replace the throttle body (TP sensor 1) (page 7-13) with a new one.
Connect the disconnected connector(s).
Erase the DTC (page 4-8).
Turn the ignition switch ON and wait for 10 seconds.
Check the DTC with GST or MCS.

Is same DTC indicated?

YES – Replace the ECM with a new one (page 4-55), and recheck.

NO – Faulty original TP sensor 1

DTC P0125

Probable cause:

- Faulty ECT sensor
- Insufficient coolant
- Faulty thermostat
- Faulty water pump
- Clogged coolant passage
- Faulty ECM

Symptom/Fail-safe function:

- Hard to start at low temperature
- Exhaust gas too lean or too rich
- Fuel consumption deterioration
- Driveability deterioration

1. **ECT Sensor Inspection**

   Replace the ECT sensor with a new one (page 4-58).
   Erase the DTC (page 4-8).
   Warm up the engine until the coolant temperature is above 25°C (77°F) and wait for 10 minutes.
   Check the DTC with GST or MCS.

   Is same DTC indicated?

   YES – Replace the ECM with a new one (page 4-55), and recheck.

   NO – Faulty original ECT sensor

DTC P0131/P0132

Probable cause:

- Faulty A/F sensor or its related circuits
- Faulty ECM

Symptom/Fail-safe function:

- Fuel consumption deterioration
- Detected value feedback stops

1. **A/F Sensor Output Line Open Circuit Inspection**

   Disconnect the A/F sensor 4P connector (page 4-61).
   Disconnect the ECM 39P connector (page 4-55).
   Check for continuity between the wire harness side 4P connector [1] and 39P connector [2].

   Connection: Black – A25

   Is there continuity?

   YES – GO TO STEP 2.

   NO – Open circuit in the Black wire

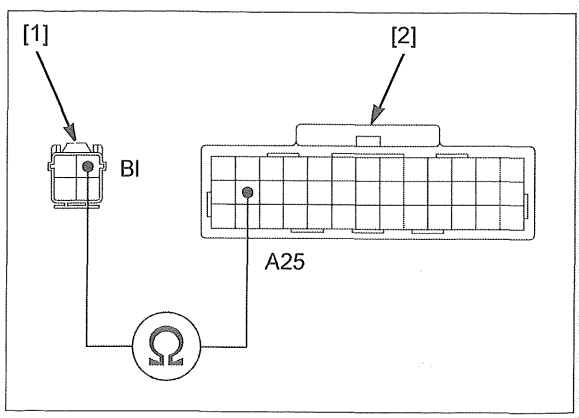

2. **A/F Sensor Output Line Short Circuit Inspection**

Check for continuity between the wire harness side 4P connector [1] and ground.

Connection: Black – Ground

Is there continuity?

YES – Short circuit in the Black wire

NO – GO TO STEP 3.

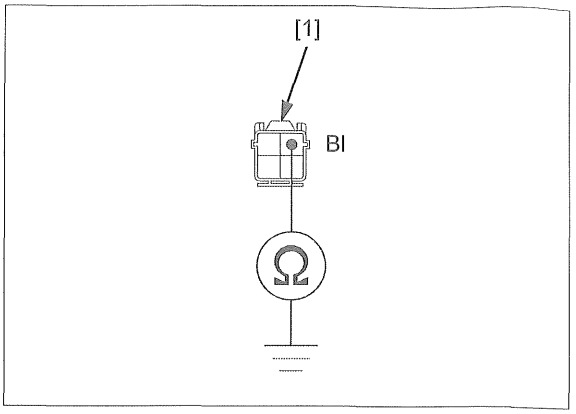

3. **A/F Sensor Ground Line Open Circuit Inspection**

Check for continuity between the wire harness side 4P connector [1] and 39P connector [2].

Connection: Gray – A36

Is there continuity?

YES – GO TO STEP 4.

NO – Open circuit in the Gray wire

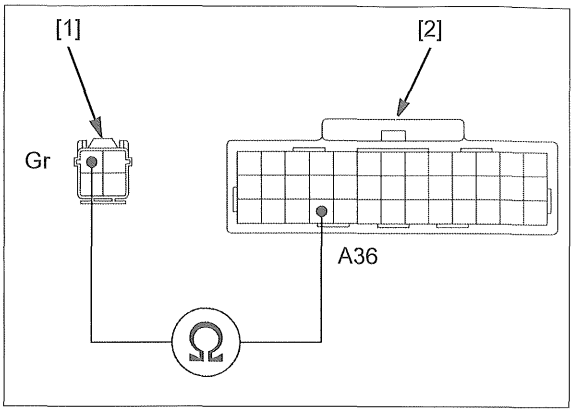

4. **A/F sensor Inspection**

Replace the A/F sensor with a new one (page 4-58).
Connect the disconnected connector(s).
Erase the DTC (page 4-8).
Start the engine and wait for a minute.
Stop the engine.
Check the DTC with GST or MCS.

Is same DTC indicated?

YES – Replace the ECM with a new one (page 4-55), and recheck.

NO – Faulty original A/F sensor

DTC P0133/P0134

Probable cause:

- Faulty A/F sensor
- Faulty A/F sensor heater
- Exhaust leakage
- Faulty ECM

Symptom/Fail-safe function:

- Fuel consumption deterioration
- Exhaust gas too lean or too rich
- Driveability deterioration
- Detected value feedback stops

1. **A/F sensor Inspection**

   Replace the A/F sensor with a new one (page 4-58).
   Erase the DTC (page 4-8).
   Warm up the engine until the coolant temperature is above 50°C (122°F) and keep the engine revolution at 1,600 – 8,100 min^{-1} (rpm) with no 100 min^{-1} (rpm) variation a second.
   Check the DTC with GST or MCS.

   Is same DTC indicated?

   YES – Replace the ECM with a new one (page 4-55), and recheck.

   NO – Faulty original A/F sensor

DTC P0201/P0202

Probable cause:

- Faulty fuel injector or its related circuits
- Faulty ECM

Symptom/Fail-safe function:

- Engine does not start (Fuel injectors, fuel pump and ignition shut down)

1. **Fuel Injector Input Voltage Inspection**

   Disconnect the fuel injector 2P connector (page 7-13).
   Temporarily install the ignition switch, starter relay switch and battery.
   Turn the ignition switch ON.
   Measure the voltage between the wire harness side 2P connector [1] and ground.

   Connection: Black (+) – Ground (–)

   Is there battery voltage?

   YES – GO TO STEP 2.

   NO – Open circuit in the Black wire

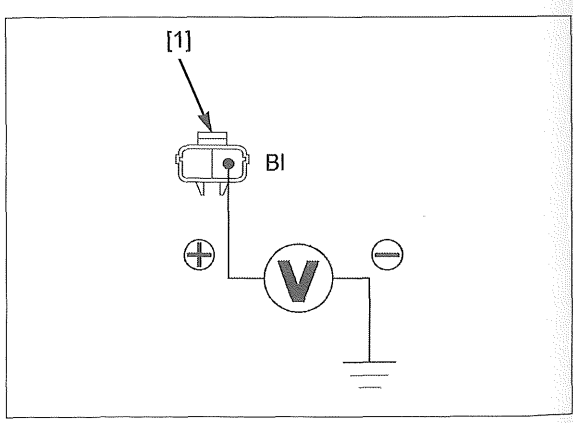

2. **Fuel Injector Signal Line Open Circuit Inspection**

Turn the ignition switch OFF.
Disconnect the ECM 33P (Black) connector (page 4-55).
Check for continuity between the wire harness side 2P connector [1] and 33P (Black) connector [2].

Connection:
No.1 fuel injector: Pink – B7
No.2 fuel injector: Violet – B8

Is there continuity?

YES – GO TO STEP 3.

NO – • Open circuit in the following:
– No.1 fuel injector: Pink wire
– No.2 fuel injector: Violet wire

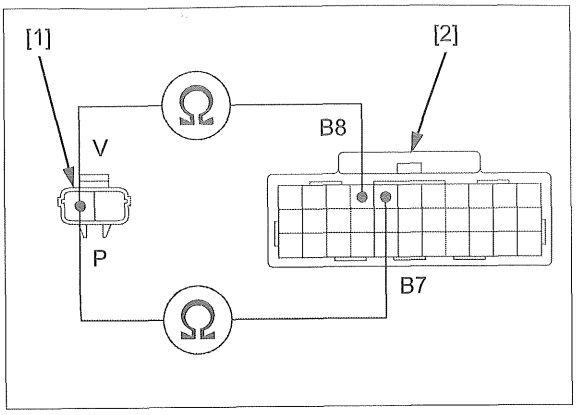

3. **Fuel Injector Signal Line Short Circuit Inspection**

Check for continuity between the wire harness side 2P connector [1] and ground.

Connection:
No.1 fuel injector: Pink – Ground
No.2 fuel injector: Violet – Ground

Is there continuity?

YES – • Short circuit in the following:
– No.1 fuel injector: Pink wire
– No.2 fuel injector: Violet wire

NO – GO TO STEP 4.

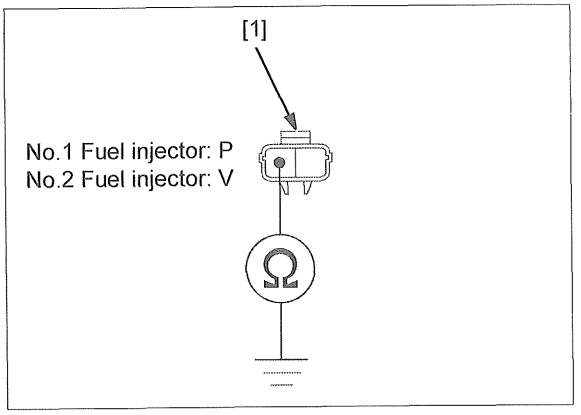

4. **Fuel Injector Inspection**

Replace the fuel injector with a new one.
Connect the disconnected connector(s).
Erase the DTC (page 4-8).
Turn the ignition switch ON and wait for 10 seconds.
Check the DTC with GST or MCS.

Is same DTC indicated?

YES – Replace the ECM with a new one (page 4-55), and recheck.

NO – Faulty original fuel injector

DTC P0221

Probable cause:

- Faulty TP sensor 2
- Faulty ECM

Symptom/Fail-safe function:

- Driveability deterioration
- Motorcycle speed is limited: approximately 120 km/h (75 mph)
- HSTC does not operate

1. TP Sensor 2 Inspection

Replace the throttle body (TP sensor 2) (page 7-13).
Erase the DTC (page 4-8).
Turn the ignition switch ON and wait for 10 seconds.
Check the DTC with GST or MCS.

Is same DTC indicated?

YES – Replace the ECM with a new one (page 4-55), and recheck.

NO – Faulty original TP sensor 2

DTC P0222/P0223

Probable cause:

- Faulty TP sensor 2 or its related circuits
- Faulty ECM

Symptom/Fail-safe function:

- Engine operates at idle speed
- HSTC does not operate

1. TP Sensor 2 Input Voltage Inspection

Disconnect the TBW unit 6P connector (page 7-13).
Temporarily install the ignition switch, starter relay switch and battery.
Turn the ignition switch ON.
Measure the voltage at the wire harness side 6P connector [1].

Connection: Yellow (+) – Light green (–)

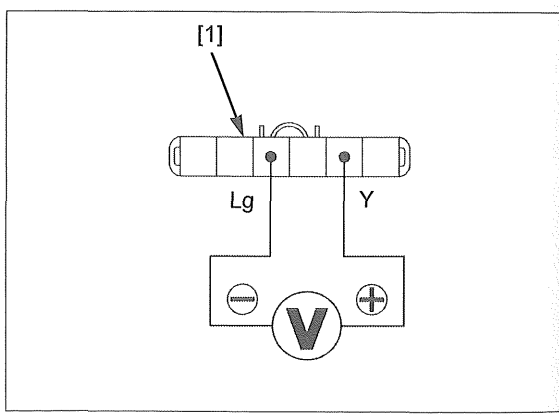

Is about 5 V indicated?

YES – GO TO STEP 2.

NO –
- Open circuit in the Yellow wire
- Open circuit in the Light green wire
- If the wires are OK, replace the ECM with a new one (page 4-55), and recheck.

2. TP Sensor 2 Output Line Open Circuit Inspection

Turn the ignition switch OFF.
Disconnect the ECM 33P (Black) connector (page 4-55).
Check for continuity between the wire harness side 6P connector [1] and 33P (Black) connector [2].

Connection: Blue/white – B28

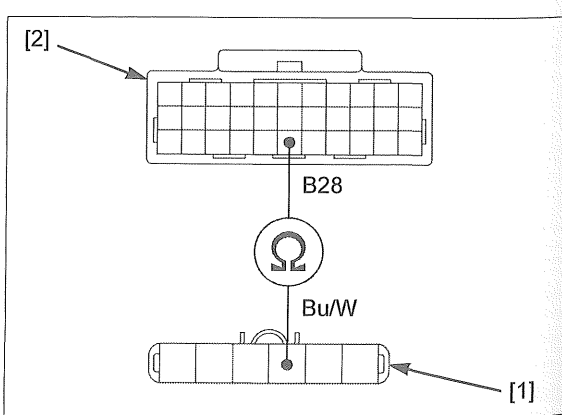

Is there continuity?

YES – GO TO STEP 3.

NO – Open circuit in the Blue/white wire

3. **TP Sensor 2 Output Line Short Circuit Inspection**

Check for continuity between the wire harness side 6P connector [1] and ground.

Connection: Blue/white – Ground

Is there continuity?

YES – Short circuit in the Blue/white wire

NO – GO TO STEP 4.

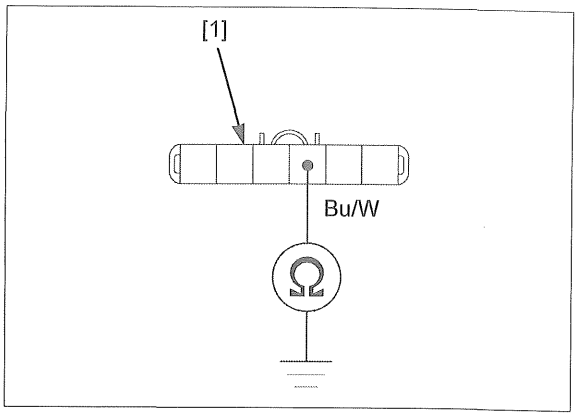

4. **TP Sensor 2 Inspection**

Replace the throttle body (TP sensor 2) (page 7-13).
Connect the disconnected connector(s).
Erase the DTC (page 4-8).
Turn the ignition switch ON and wait for 10 seconds.
Check the DTC with GST or MCS.

Is same DTC indicated?

YES – Replace the ECM with a new one (page 4-55), and recheck.

NO – Faulty original TP sensor 2

DTC P0300

Probable causes:

- Faulty ignition system
- Faulty fuel supply system
- Faulty air supply system
- Faulty cylinder compression
- Faulty MAP sensor, IAT sensor, ECT sensor, CKP sensor, APS, TP sensor, and/or A/F sensor

Symptom/Fail-safe function:

- Engine operates at restricted speed
- Driveability deterioration

NOTE:

- When the other DTC is displayed together with DTC P0300, troubleshoot it first.

1. **Parts Status Inspection**

Check and replace the following:

- Related fuse(s)
- Ignition system
- Fuel line
- Intake air related parts (e.g. air cleaner, insulator, throttle body)
- Cylinder compression
- Related sensors

Erase the DTC (page 4-8).
Perform the test-ride (page 4-13).
Check the DTC with GST or MCS.

Is same DTC indicated?

YES – Replace the ECM with a new one (page 4-55), and recheck.

NO – Checked and replaced parts failure

DTC P0315

Probable cause:

- Faulty CKP sensor
- Faulty crank pulse initialize learning
- Faulty ECM

Symptom/Fail-safe function:

- Engine operates normally

NOTE:

- This DTC is erased at the 1 D/C (driving cycle) after detecting that the system is normal.

1. **CKP Sensor Related Parts Inspection**

   Check the following:

   – Iron or other magnetic deposits between the flywheel and CKP sensor
   – Flywheel slits for obstruction
   – Installation condition of the flywheel or CKP sensor for looseness
   – Flywheel and CKP sensor tip for deformation or damage

   Are the flywheel and CKP sensor in good condition?

   YES – GO TO STEP 2.

   NO – Replace abnormal parts

2. **Crank Pulse Initialize Learning**

   Perform the crank pulse learning (page 4-60).
   Turn the ignition switch ON and wait for 10 seconds.
   Check the DTC with GST or MCS.

   Is same DTC indicated?

   YES – Replace the ECM with a new one (page 4-55), and recheck.

   NO – ECM or crank pulse initialization failure

DTC P0351/P0352

Probable cause:

- Faulty ignition coil or its related circuits
- Faulty ECM

Symptom/Fail-safe function:

- Fuel injector and ignition coil shut down

1. **Ignition Coil Primary Coil Input Voltage Inspection**

   Disconnect the ignition coil primary wire connector (page 5-9).
   Temporarily install the ignition switch.
   Turn the ignition switch ON.
   Measure the voltage between the wire harness side primary wire connector [1] and ground.

   Connection: Black (+) – Ground (–)

   Is there battery voltage?

   YES – GO TO STEP 2.

   NO – Open circuit in the Black wire

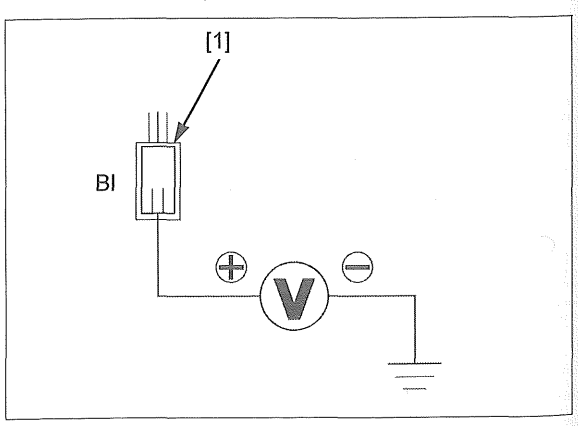

2. **Ignition Coil Primary Coil Signal Line Open Circuit Inspection**

Turn the ignition switch OFF.
Disconnect the ECM 33P (Black) connector (page 4-55).
Check the continuity between the wire harness side primary wire connector [1] and 33P (Black) connector [2].

Connection:
No.1 ignition coil: Blue/white – B33
No.2 ignition coil: Yellow/blue – B22

Is there continuity?

YES – GO TO STEP 3.

NO – • Open circuit in the following:
– No.1 ignition coil: Blue/white wire
– No.2 ignition coil: Yellow/blue wire

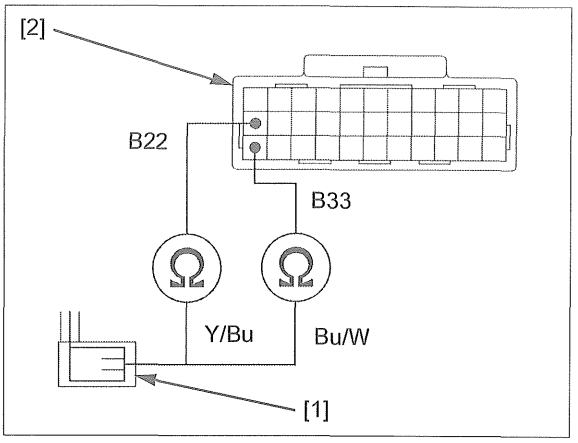

3. **Ignition Coil Primary Coil Signal Line Short Circuit Inspection**

Check for continuity between the wire harness side primary wire connector [1] and ground.

Connection:
No.1 ignition coil: Blue/white – Ground
No.2 ignition coil: Yellow/blue – Ground

Is there continuity?

YES – • Short circuit in the following:
– No.1 ignition coil: Blue/white wire
– No.2 ignition coil: Yellow/blue wire

NO – GO TO STEP 4.

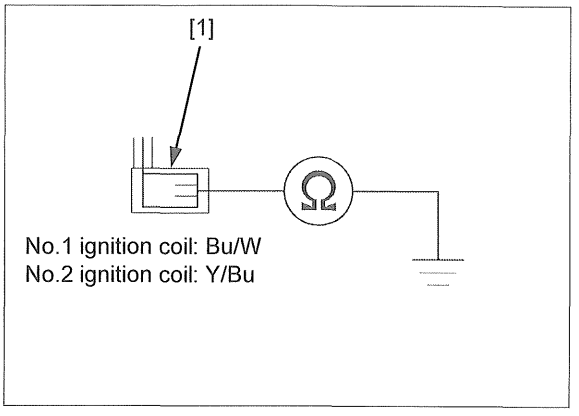

4. **Ignition Coil Inspection**

Replace the ignition coil with a new one (page 5-9).
Connect the disconnected connector(s).
Erase the DTC (page 4-8).
Turn the ignition switch ON and wait for 10 seconds.
Check the DTC with GST or MCS.

Is same DTC indicated?

YES – Replace the ECM with a new one (page 4-55), and recheck.

NO – Faulty original direct ignition coil

DTC P0443

Probable cause:

- Faulty EVAP purge control solenoid valve or its related circuits
- Faulty ECM

Symptom/Fail-safe function:

- Engine operates normally

1. EVAP Purge Control Solenoid Valve Input Voltage Inspection

Disconnect the EVAP purge control solenoid valve 2P connector (page 7-15).
Temporarily install the ignition switch.
Turn the ignition switch ON.
Measure the voltage between the wire harness side 2P connector [1] and ground.

Connection: Black (+) – Ground (–)

Is there battery voltage?

YES – GO TO STEP 2.

NO – Open circuit in the Black wire

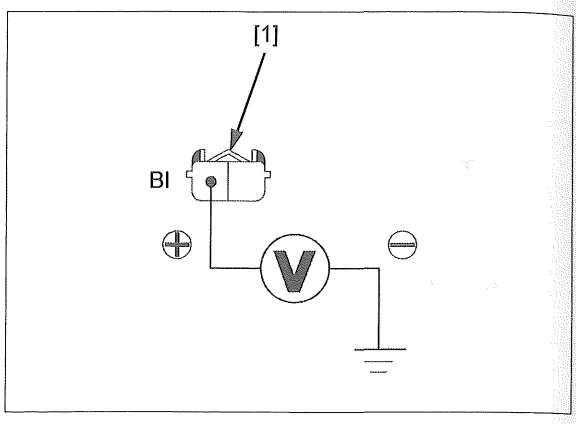

2. EVAP Purge Control Solenoid Valve Signal Line Open Circuit Inspection

Turn the ignition switch OFF.
Disconnect the ECM 33P (Black) connector (page 4-55).
Check for continuity between the wire harness side 2P connector [1] and 33P (Black) connector [2].

Connection: Yellow – B1

Is there continuity?

YES – GO TO STEP 3.

NO – Open circuit in the Yellow wire

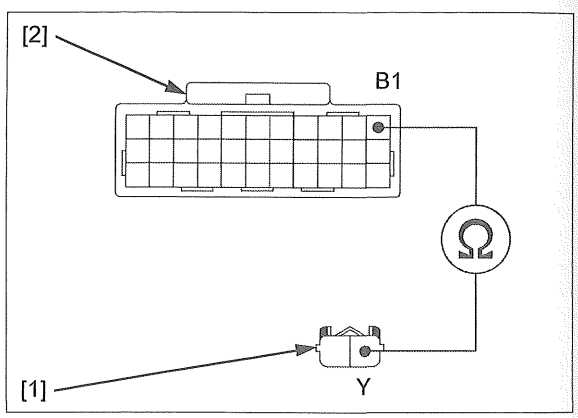

3. EVAP Purge Control Solenoid Valve Signal Line Short Circuit Inspection

Check for continuity between the wire harness side 2P connector [1] and ground.

Connection: Yellow – Ground

Is there continuity?

YES – Short circuit in the Yellow wire

NO – GO TO STEP 4.

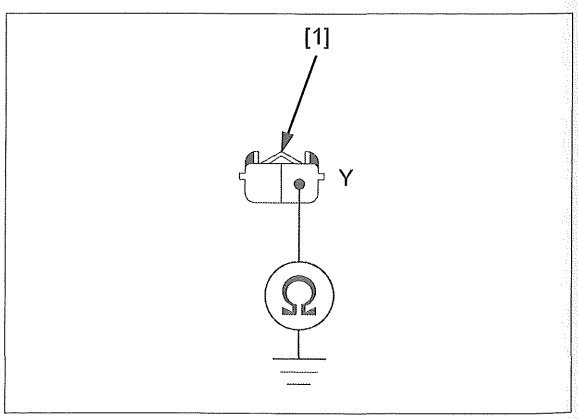

4. **EVAP Purge Control Solenoid Valve Inspection**

   Replace the EVAP purge control solenoid valve with a new one (page 7-15).
   Connect the disconnected connector(s).
   Erase the DTC (page 4-8).
   Turn the ignition switch ON and wait for 10 seconds.
   Check the DTC with GST or MCS.

   Is same DTC indicated?

   YES – Replace the ECM with a new one (page 4-55), and recheck.

   NO – Faulty original EVAP purge solenoid valve

DTC P0500

Probable cause:

- Faulty front wheel speed sensor or its related circuits
- ABS modulator has DTC (CAN lines included)
- Faulty ECM

Symptom/Fail-safe function:

- Engine operates normally

NOTE:

- When the other DTC is displayed together with DTC P0500, troubleshoot it first.

1. **Front Wheel Speed Sensor Signal Input Line Open Circuit Inspection**

   Disconnect the following:

   – ABS modulator 18P connector (page 19-7)
   – ECM 33P (Black) connector (page 4-55)

   Check for continuity between the wire harness side 18P connector [1] and 33P (Black) connector [2].

   Connection: Violet/red – B14

   Is there continuity?

   YES – GO TO STEP 2.

   NO – Open circuit in the Violet/red wire

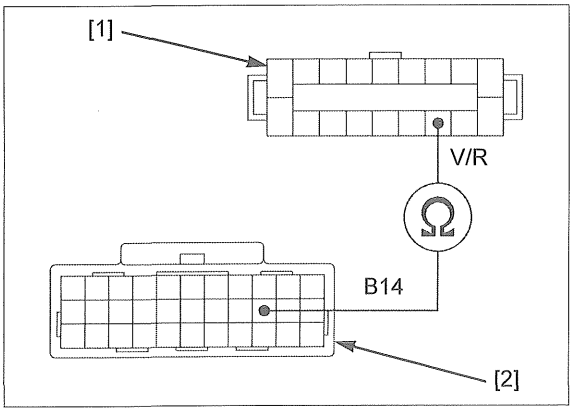

2. **Front Wheel Speed Sensor Signal Input Line Short Circuit Inspection**

   Check for continuity between the wire harness side 33P (Black) connector [1] and ground.

   Connection: B14 – Ground

   Is there continuity?

   YES – Short circuit in the Violet/red wire

   NO – GO TO STEP 3.

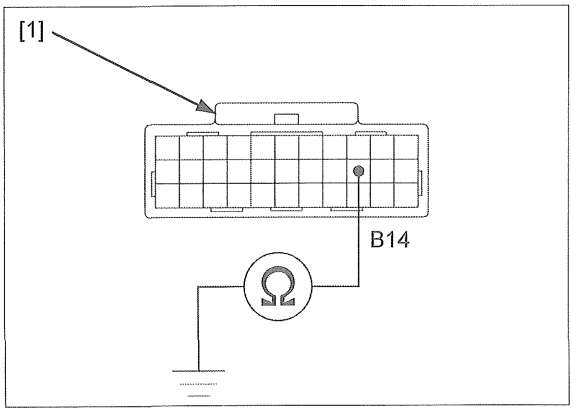

3. **ECM Inspection**

Replace the ECM with a new one (page 4-55).
Connect the disconnected connector(s).
Erase the DTC (page 4-8).
Perform the test-ride (page 4-13).
Check the DTC with GST or MCS.

Is same DTC indicated?

YES – Replace the ABS modulator with a new one (page 19-25), and recheck.

NO – Faulty original ECM

DTC P0562/P0686/P0687

Probable cause:

- Faulty SUB VB relay or its related circuits
- Blown TBW fuse (10 A)
- Faulty ECM

Symptom/Fail-safe function:

- Engine operates normally

1. **SUB VB Relay Inspection**

Remove the SUB VB relay (page 21-22).
Check the SUB VB relay (page 21-23).

Is the SUB VB relay normal?

YES – GO TO STEP 2.

NO – Faulty SUB VB relay

2. **SUB VB Relay Input Voltage Inspection**

Measure the voltage at the wire harness side SUB VB relay connector [1].

Connection: Red/blue (+) – Green (–)

Is there battery voltage?

YES – GO TO STEP 3.

NO – • Open circuit in the Red/blue wire
• Blown TBW fuse (10 A)
• Open circuit in the Green wire

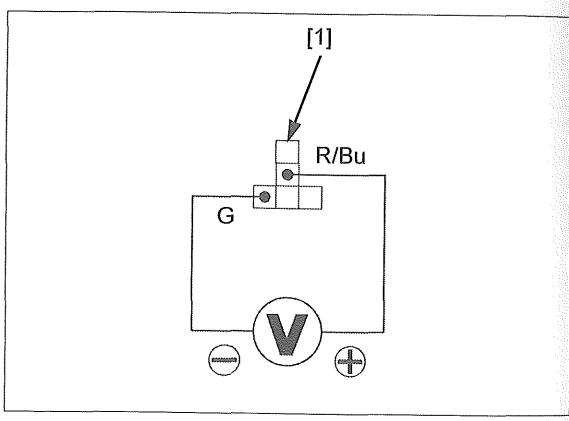

3. **SUB VB Relay Line Open Circuit Inspection**

Disconnect the ECM 39P connector (page 4-55).
Check for continuity between the wire harness side SUB VB relay connector [1] and 39P connector [2].

Connection:
Pink/blue – A8
Violet – A27

Is there continuity?

YES – GO TO STEP 4.

NO – • Open circuit in the Pink/blue wire
• Open circuit in the Violet wire

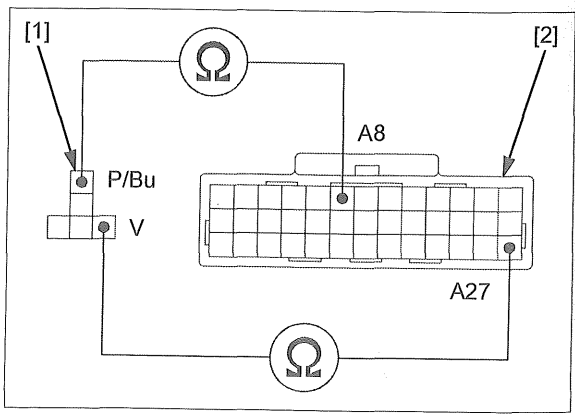

4. **SUB VB Relay Coil Line Short Circuit Inspection**

Check for continuity between the wire harness side SUB VB relay connector [1] and ground.

Connection: Violet – Ground

Is there continuity?

YES – Short circuit in the Violet wire

NO – GO TO STEP 5.

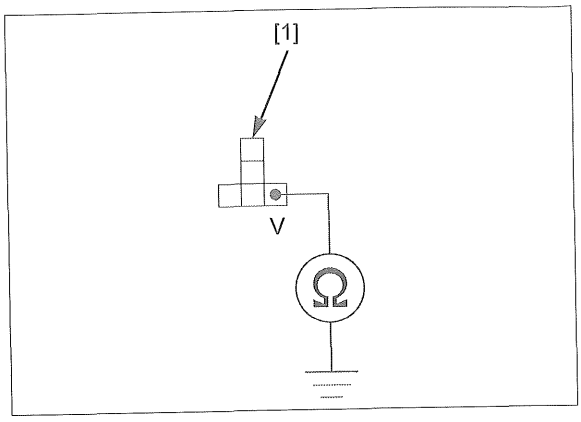

5. **DTC Recheck**

Connect the ECM 39P connector and install the SUB VB relay.
Erase the DTC (page 4-8).
Turn the ignition switch ON and wait for 10 seconds.
Check the DTC with GST or MCS.

Is same DTC indicated?

YES – Replace the ECM with a new one (page 4-55), and recheck.

NO – Intermittent failure

DTC P0606

Probable cause:

- Faulty ECM

Symptom/Fail-safe function:

- Hard to start

1. **DTC Recheck**

Erase the DTC (page 4-8).
Turn the ignition switch ON and wait for 10 seconds.
Check the DTC with GST or MCS.

Is same DTC indicated?

YES – Replace the ECM with a new one (page 4-55), and recheck.

NO – Intermittent failure

DTC P062F

Probable cause:

- Faulty ECM

Symptom/Fail-safe function:

- Hard to start
- ECM does not hold the self-diagnosis data
  - The MIL come on (the DTC can be readout and erased only by GST or MCS).

1. **DTC Recheck**

   Erase the DTC (page 4-8).
   Turn the ignition switch ON and wait for 10 seconds.
   Check the DTC with GST or MCS.

   Is same DTC indicated?

   YES – Replace the ECM with a new one (page 4-55), and recheck.

   NO – Intermittent failure

DTC P064D

Probable cause:

- Faulty A/F sensor IC circuit input voltage line
- Faulty A/F sensor
- Faulty ECM

Symptom/Fail-safe function:

- Fuel consumption deterioration
- Driveability deterioration

1. **A/F Sensor IC Circuit Input Voltage Inspection**

   Disconnect the ECM 39P connector (page 4-55).
   Temporarily install the ignition switch.
   Turn the ignition switch ON.
   Measure the voltage at the wire harness side 39P connector [1].

   Connection: A3 (+) – Ground (–)

   Is there battery voltage?

   YES – GO TO STEP 2.

   NO – Open circuit in the Black wire

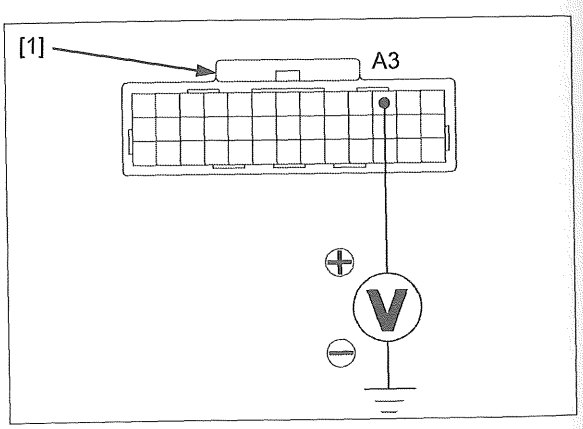

2. **A/F Sensor Inspection**

   Replace the A/F sensor with a new one (page 4-61).
   Erase the DTC (page 4-8).
   Turn the ignition switch ON or start the engine, and wait for a minute.
   Check the DTC with GST or MCS.

   Is same DTC indicated?

   YES – Replace the ECM with a new one (page 4-55), and recheck.

   NO – Faulty original A/F sensor

DTC P0722

Probable cause:
- Faulty VS sensor or its circuit
- Faulty ECM

Symptom/Fail-safe function:
- Engine operates normally

1. **VS Sensor Ground Line Open Circuit Inspection**

   Disconnect the VS sensor 3P connector (page 4-57).
   Check for continuity between the wire harness side 3P connector [1] and ground.

   Connection: Green – Ground

   Is there continuity?

   YES – GO TO STEP 2.

   NO – Open circuit in the Green wire

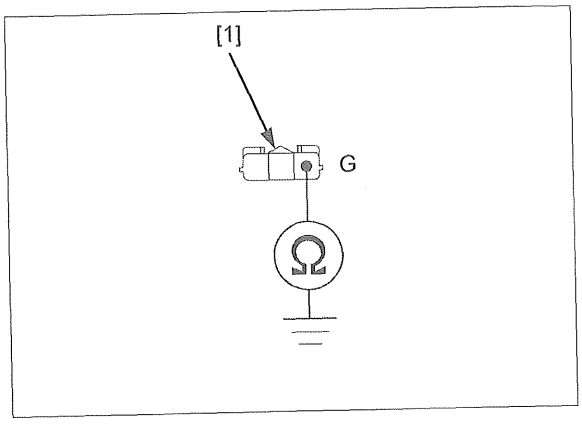

2. **VS Sensor Input Voltage Inspection**

   Temporarily install the ignition switch, starter relay switch and battery.
   Turn the ignition switch ON.
   Measure the voltage at the wire harness side 3P connector [1].

   Connection: Black (+) – Green (–)

   Is there battery voltage?

   YES – GO TO STEP 3.

   NO – Open circuit in the Black or Green wire

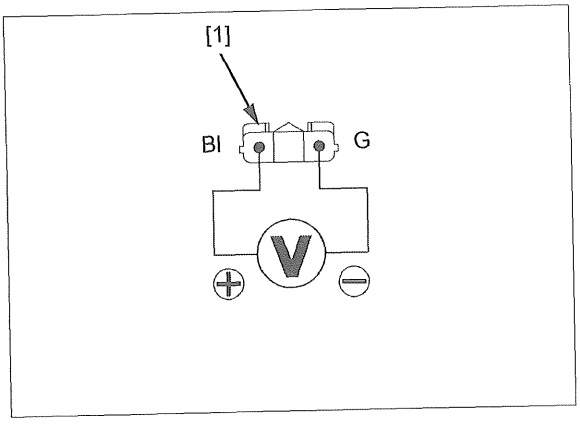

3. **VS Sensor Output Line Open Circuit Inspection**

   Turn the ignition switch OFF.
   Disconnect the ECM 33P (Gray) connector (page 4-55).
   Check for continuity between the wire harness side 3P connector [1] and 33P (Gray) connector [2].

   Connection: Pink – C16

   Is there continuity?

   YES – GO TO STEP 4.

   NO – Open circuit in the Pink wire

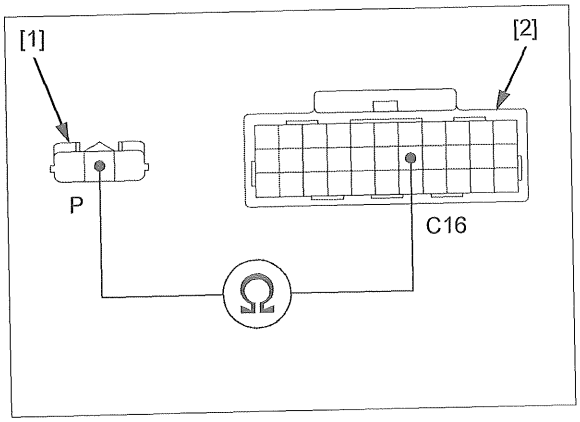

4. **VS Sensor Output Line Short Circuit Inspection**

Check for continuity between the wire harness side 3P connector [1] and ground.

Connection: Pink – Ground

Is there continuity?

YES – Short circuit in the Pink wire

NO – GO TO STEP 5.

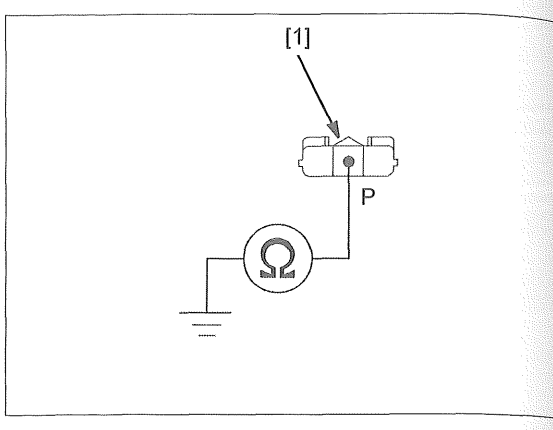

5. **VS Sensor Inspection**

Replace the VS sensor with a new one (page 4-57).
Connect the disconnected connector(s).
Erase the DTC (page 4-8).
Perform the test-ride (page 4-13).
Check the DTC with GST or MCS.

Is same DTC indicated?

YES – Replace the ECM with a new one (page 4-55), and recheck.

NO – Faulty original VS sensor

DTC P1000/P1001

Probable cause:

- Faulty bank angle sensor or its related circuits
- Faulty ECM

Symptom/Fail-safe function:

- Engine operates normally
- Engine stop function does not operate

1. **Bank Angle Sensor Input Voltage Inspection**

Disconnect the bank angle sensor 2P connector (page 4-59).
Temporarily install the ignition switch.
Turn the ignition switch ON.
Measure the voltage between the wire harness side 2P connector [1] and ground.

Connection: Black (+) – Ground (–)

Is there battery voltage?

YES – GO TO STEP 2.

NO – Open circuit in the Black wire

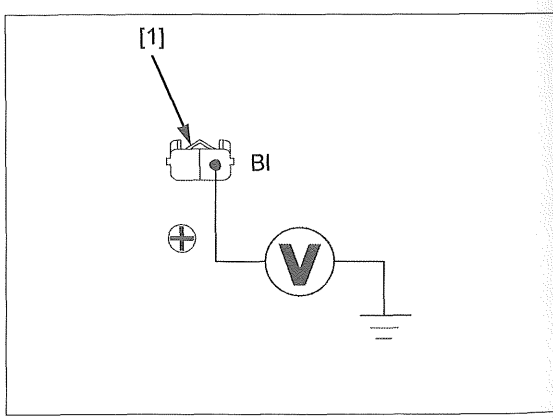

2. **Bank Angle Sensor Signal Line Open Circuit Inspection**

Turn the ignition switch OFF.
Disconnect the ECM 39P connector (page 4-55).
Check for continuity between the wire harness side 2P connector [1] and 39P connector [2].

Connection: Black/blue – A37

Is there continuity?

YES – GO TO STEP 3.

NO – Open circuit in the Black/blue wire

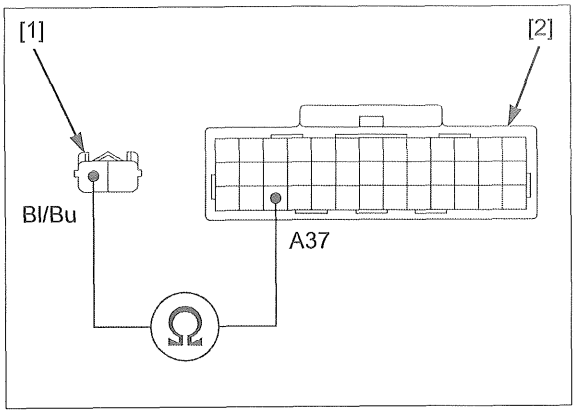

3. **Bank Angle Sensor Signal Line Short Circuit Inspection**

Check for continuity between the wire harness side 2P connector [1] and ground.

Connection: Black/blue – Ground

Is there continuity?

YES – Short circuit in the Black/blue wire

NO – GO TO STEP 4.

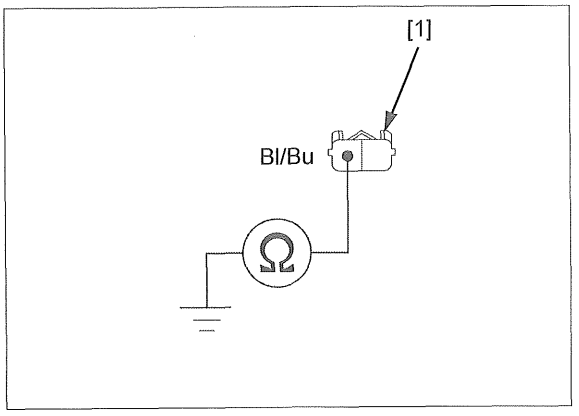

4. **Bank Angle Sensor Inspection**

Replace the bank angle sensor with a new one (page 4-59).
Connect the disconnected connector(s).
Erase the DTC (page 4-8).
Check the DTC with the GST or MCS.

Is same DTC indicated?

YES – Replace the ECM with a new one (page 4-55), and recheck.

NO – Faulty original bank angle sensor

DTC P1658/P1659

Probable cause:

- Faulty TBW relay or its related circuits
- Blown TBW fuse (10 A)
- Faulty ECM

Symptom/Fail-safe function:

- Motorcycle speed is limited: approximately 120 km/h (75 mph) (for DTC P1658)
- Engine operates at idle speed (for DTC P1659)

1. **TBW Relay Inspection**

   Remove the TBW relay (page 21-22).
   Check the TBW relay (page 21-23).

   Is the TBW relay normal?

   YES – GO TO STEP 2.

   NO – Faulty TBW relay

2. **TBW Relay Input Voltage Inspection**

   Measure the voltage at the wire harness side TBW relay connector [1].

   Connection: Red/blue (+) – Green (–)

   Is there battery voltage?

   YES – GO TO STEP 3.

   NO – • Open circuit in the Red/blue wire
   • Open circuit in the Green wire

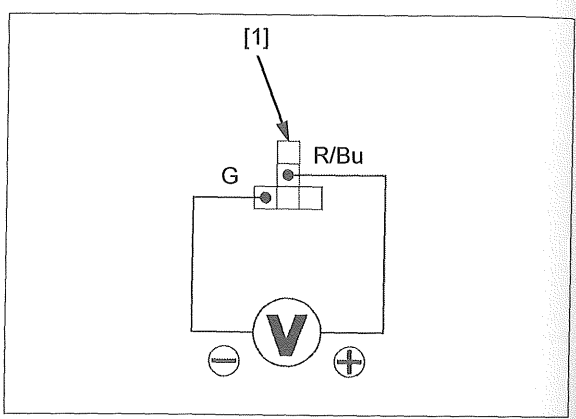

3. **TBW Relay Line Open Circuit Inspection**

   Disconnect the ECM 39P and ECM 33P (Gray) connectors (page 4-55).
   Check for continuity between the wire harness side TBW relay connector [1] and 39P connector [2]/33P (Gray) connector [3].

   Connection:
   Brown – A1
   Yellow – C10

   Is there continuity?

   YES – GO TO STEP 4.

   NO – • Open circuit in the Brown wire
   • Open circuit in the Yellow wire

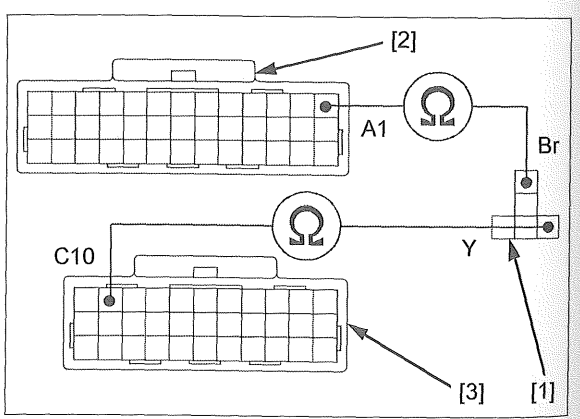

4. **TBW Relay Coil Line Short Circuit Inspection**

Check for continuity between the wire harness side TBW relay connector [1] and ground.

Connection: Yellow – Ground

Is there continuity?

YES – Short circuit in the Yellow wire

NO – GO TO STEP 5.

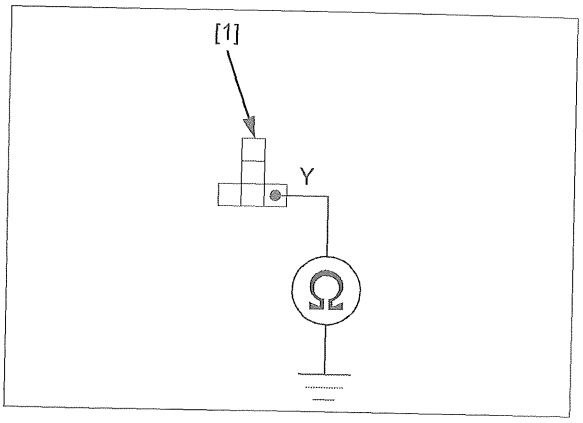

5. **DTC Recheck**

Connect the ECM connectors and install the TBW relay.
Erase the DTC (page 4-8).
Turn the ignition switch ON and wait for 10 seconds.
Check the DTC with GST or MCS.

Is same DTC indicated?

YES – Replace the ECM with a new one (page 4-55), and recheck.

NO – Intermittent failure

DTC P1684

Probable cause:

- Faulty TBW return spring
- Faulty ECM

Symptom/Fail-safe function:

- Motorcycle speed is limited: approximately 120 km/h (75 mph)

1. **Throttle Valve and Return Spring Inspection**

- Be careful not to damage the throttle valve.
- The return spring cannot be replaced.
  If the return spring is faulty, replace the throttle body.

Remove the throttle body (page 7-13).
Open the throttle valve [1] with your finger.

Does the throttle valve open and return smoothly?

YES – GO TO STEP 2.

NO – Faulty throttle body (throttle valve and/or return spring)

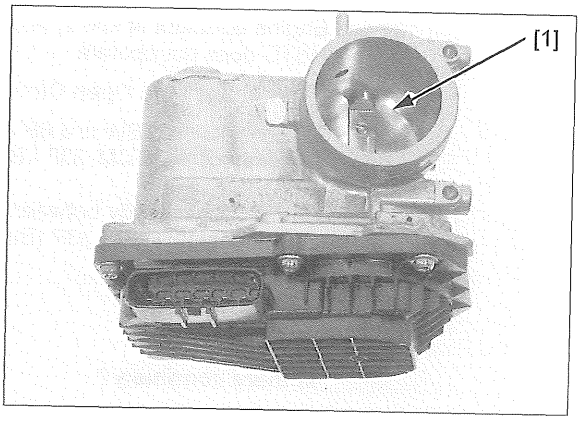

2. **Throttle Body Inspection**

Check the throttle bore and valve visually for carbon deposits.

Is there contamination?

YES – Clean the throttle bore and valve carefully.

NO – GO TO STEP 3.

3. **TBW System Inspection**

Replace the throttle body (TBW return spring) with a new one (page 7-13).
Erase the DTC (page 4-8).
Turn the ignition switch ON and wait for 10 seconds.
Check the DTC with GST or MCS.

Is same DTC indicated?

YES – Replace the ECM with a new one (page 4-55), and recheck.

NO – Faulty original TBW return spring

DTC P1712

Probable cause:

- Faulty TCM
- Faulty ECM

Symptom/Fail-safe function:

- Gearshift function does not work

1. **TCM Inspection**

Replace the TCM with a new one (page 4-55).
Erase the DTC (page 4-8).
Turn the ignition switch ON and wait for 10 seconds.
Check the DTC with GST or MCS.

Is same DTC indicated?

YES – Replace the ECM with a new one (page 4-55), and recheck.

NO – Faulty original TCM

DTC P2101/P2118

Probable cause:

- Faulty TBW motor or its related circuits
- Faulty ECM

Symptom/Fail-safe function:

- Engine operates at idle speed
- HSTC does not operate

1. **TBW Motor Line Open Circuit Inspection**

Disconnect the TBW unit 6P connector (page 7-13).
Disconnect the ECM 33P (Black) connector (page 4-55).
Check for continuity between the wire harness side 6P connector [1] and 33P (Black) connector [2].

Connection:
Blue – B3
Blue/red – B4

Is there continuity?

YES – GO TO STEP 2.

NO – • Open circuit in the Blue wire
• Open circuit in the Blue/red wire

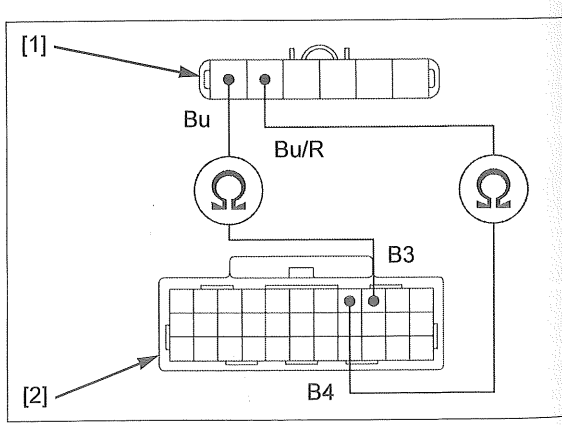

2. **TBW Motor Line Short Circuit Inspection**

Check for continuity between the wire harness side 6P connector [1] and ground.

Connection:
Blue – Ground
Blue/red – Ground

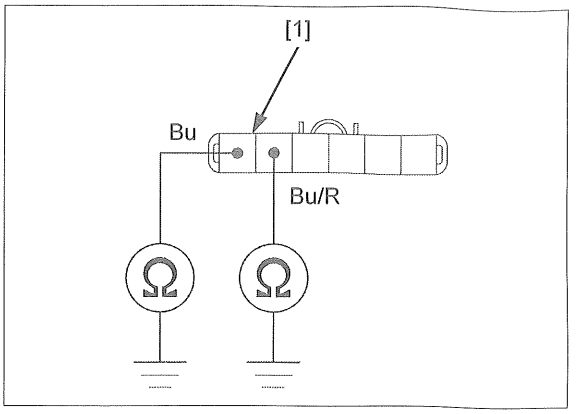

Is there continuity?

YES – • Short circuit in the Blue wire
• Short circuit in the Blue/red wire

NO – GO TO STEP 3.

3. **TBW Motor Inspection**

Replace the throttle body (TBW motor) with a new one (page 7-13).
Connect the disconnected connector(s).
Erase the DTC (page 4-8).
Turn the ignition switch ON and wait for 10 seconds.
Check the DTC with GST or MCS.

Is same DTC indicated?

YES – Replace the ECM with a new one (page 4-55), and recheck.

NO – Faulty original TBW motor

DTC P2121/P2126

Probable cause:

- Faulty APS 1
- Faulty APS 2
- Faulty ECM

Symptom/Fail-safe function:

- Engine operates at idle speed

1. **APS Inspection**

Replace the right handlebar switch (APS) with a new one (page 16-4).
Erase the DTC (page 4-8).
Turn the ignition switch ON and wait for 10 seconds.
Check the DTC with GST or MCS.

Is same DTC indicated?

YES – Replace the ECM with a new one (page 4-55), and recheck.

NO – Faulty original APS

DTC P2122/P2123

Probable cause:

- Faulty APS 1 or its related circuits
- Faulty ECM

Symptom/Fail-safe function:

- Engine operates at idle speed

1. APS 1 Input Voltage Inspection

Disconnect the right handlebar switch 8P connector (page 21-17).
Temporarily install the ignition switch.
Turn the ignition switch ON.
Measure the voltage at the wire harness side 8P connector [1].

Connection: Black (+) – Yellow (–)

Is about 5 V indicated?

YES – GO TO STEP 2.

NO –
- Open circuit in the Black wire
- Open circuit in the Yellow wire
- If the wires are OK, replace the ECM with a new one (page 4-55), and recheck.

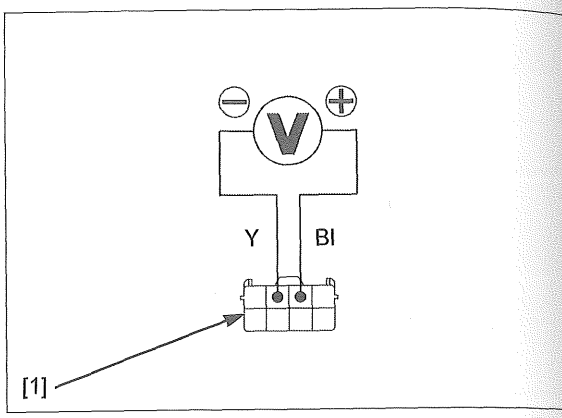

2. APS 1 Output Line Open Circuit Inspection

Turn the ignition switch OFF.
Disconnect the ECM 39P connector (page 4-55).
Check for continuity between the wire harness side 8P connector [1] and 39P connector [2].

Connection: Blue – A26

Is there continuity?

YES – GO TO STEP 3.

NO – Open circuit in the Blue wire

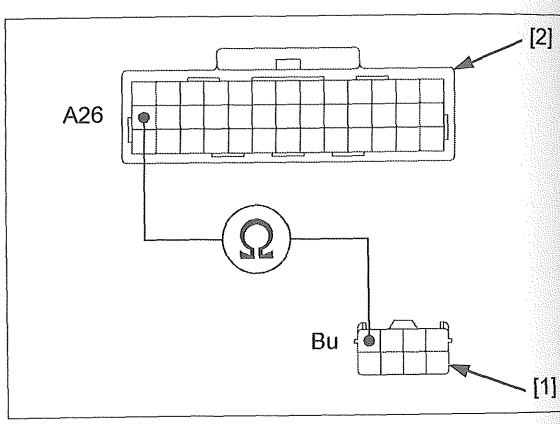

3. APS 1 Output Line Short Circuit Inspection

Check for continuity between the wire harness side 8P connector [1] and ground.

Connection: Blue – Ground

Is there continuity?

YES – Short circuit in the Blue wire

NO – GO TO STEP 4.

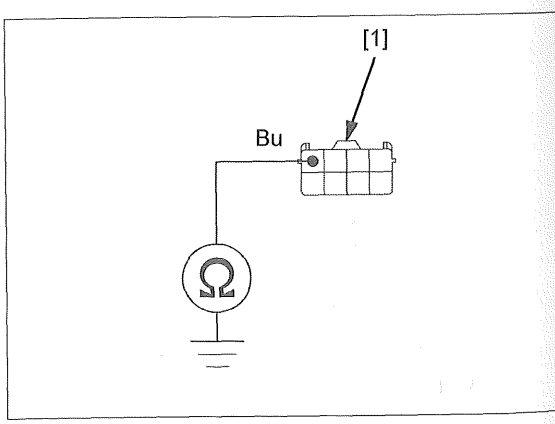

4. **APS 1 Inspection**

Replace the right handlebar switch (APS 1) with a new one (page 16-4).
Connect the disconnected connector(s).
Erase the DTC (page 4-8).
Turn the ignition switch ON and wait for 10 seconds.
Check the DTC with GST or MCS.

Is same DTC indicated?

YES – Replace the ECM with a new one (page 4-55), and recheck.

NO – Faulty original APS 1

DTC P2127/P2128

Probable cause:

- Faulty APS 2 or its related circuits
- Faulty ECM

Symptom/Fail-safe function:

- Engine operates at idle speed

1. **APS 2 Input Voltage Inspection**

Disconnect the right handlebar switch 8P connector (page 21-17).
Temporarily install the ignition switch.
Turn the ignition switch ON.
Measure the voltage at the wire harness side 8P connector [1].

Connection: Black (+) – White (–)

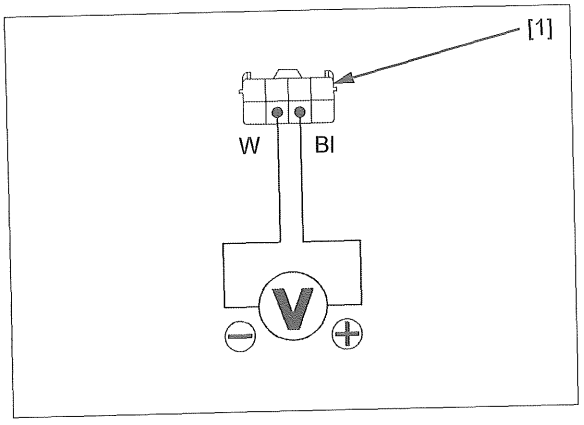

Is about 5 V indicated?

YES – GO TO STEP 2.

NO –
- Open circuit in the Black wire
- Open circuit in the White wire
- If the wires are OK, replace the ECM with a new one (page 4-55), and recheck.

2. **APS 2 Output Line Open Circuit Inspection**

Turn the ignition switch OFF.
Disconnect the ECM 39P connector (page 4-55).
Check for continuity between the wire harness side 8P connector [1] and 39P connector [2].

Connection: Gray – A38

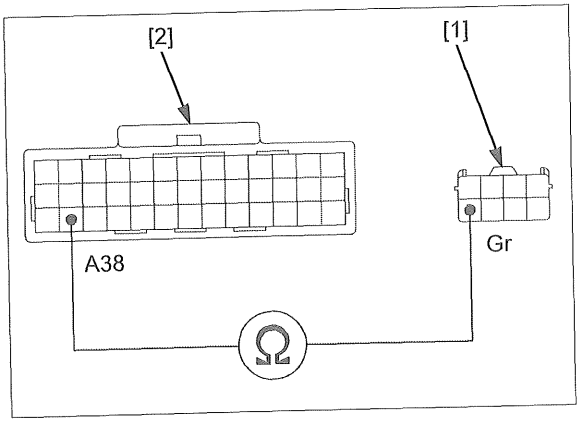

Is there continuity?

YES – GO TO STEP 3.

NO – Open circuit in the Gray wire

3. **APS 2 Output Line Short Circuit Inspection**

Check for continuity between the wire harness side 8P connector [1] and ground.

Connection: Gray – Ground

Is there continuity?

YES – Short circuit in the Gray wire

NO – GO TO STEP 4.

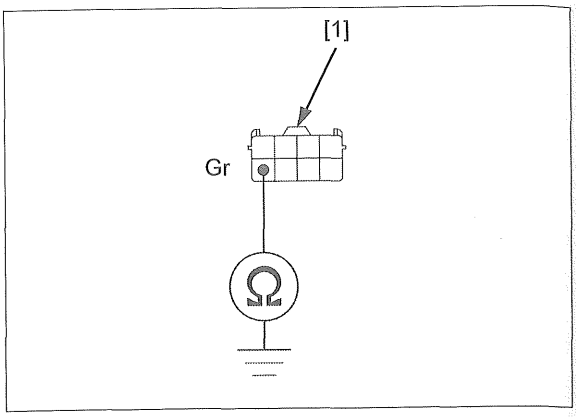

4. **APS 2 Inspection**

Replace the right handlebar switch (APS 2) with a new one (page 16-4).
Connect the disconnected connector(s).
Erase the DTC (page 4-8).
Turn the ignition switch ON and wait for 10 seconds.
Check the DTC with GST or MCS.

Is same DTC indicated?

YES – Replace the ECM with a new one (page 4-55), and recheck.

NO – Faulty original APS 2

DTC P2135

Probable cause:

- TP sensor 1 and/or TP sensor 2 or its related circuits
- Faulty ECM

Symptom/Fail-safe function:

- Engine operates at idle speed

NOTE:

- When the other DTC is displayed together with DTC P2135, troubleshoot it first.
- Clean the throttle bore and valve carefully.

1. **TP Sensor Line Short Circuit Inspection**

Disconnect the ECM 33P (Black) connector (page 4-55).
Disconnect the TBW unit 6P connector (page 7-13).
Check for continuity at the wire harness side 6P connector [1].

Connection: Blue/black – Blue/white

Is there continuity?

YES – Short circuit of the Blue/black wire-to-Blue/white wire

NO – GO TO STEP 2.

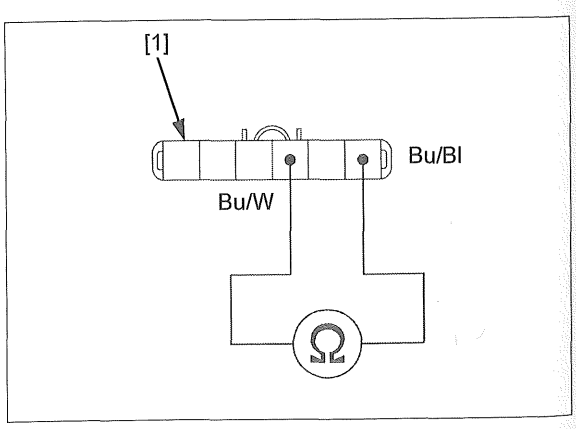

2. **TP Sensor Inspection**

Replace the throttle body (TP sensor) with a new one (page 7-13).
Connect the disconnected connector(s).
Erase the DTC (page 4-8).
Turn the ignition switch ON and wait for 10 seconds.
Check the DTC with GST or MCS.

Is same DTC indicated?

YES – Replace the ECM with a new one (page 4-55), and recheck.

NO – Faulty original TP sensor

DTC P2138

Probable cause:

- Faulty APS 1 and/or APS 2 or its related circuits
- Faulty ECM

Symptom/Fail-safe function:

- Engine operates at idle speed

1. **APS Line Short Circuit Inspection**

Disconnect the ECM 39P connector (page 4-55).
Disconnect the right handlebar switch 8P connector (page 21-17).
Check for continuity at the wire harness side 8P connector [1].

Connection: Blue – Gray

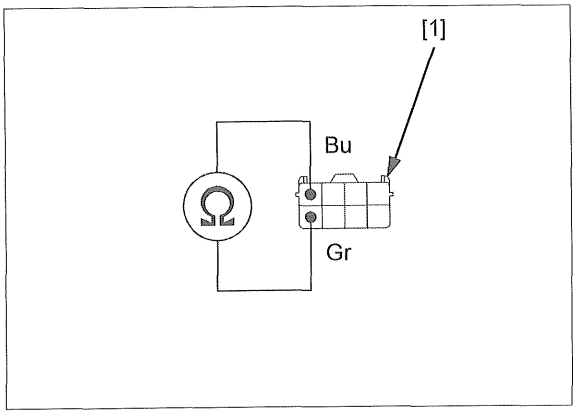

Is there continuity?

YES – Short circuit of the Blue wire-to-Gray wire

NO – GO TO STEP 2.

2. **APS Inspection**

Replace the right handlebar switch (APS) with a new one (page 16-4).
Connect the disconnected connector(s).
Erase the DTC (page 4-8).
Turn the ignition switch ON and wait for 10 seconds.
Check the DTC with GST or MCS.

Is same DTC indicated?

YES – Replace the ECM with a new one (page 4-55), and recheck.

NO – Faulty original APS

DTC P2158

Probable cause:

- Faulty rear wheel speed sensor or its related circuits
- ABS modulator has DTC (CAN lines included)
- Faulty ECM

Symptom/Fail-safe function:

- Engine operates normally
- HSTC does not operate

NOTE:

- When the other DTC is displayed together with DTC P2158, troubleshoot it first.

1. Rear Wheel Speed Sensor Signal Output Line Open Circuit Inspection

Disconnect the following:

– ABS modulator 18P connector (page 19-7)
– ECM 33P (Black) connector (page 4-55)

Check for continuity between the wire harness side 18P connector [1] and 33P (Black) connector [2].

Connection: Black – B15

Is there continuity?

YES – GO TO STEP 2.

NO – Open circuit in the Black wire

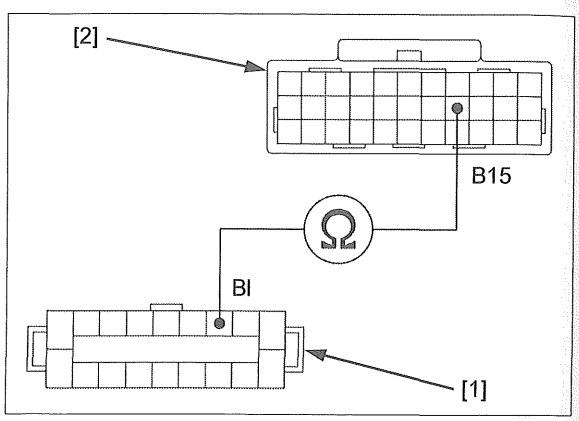

2. Rear Wheel Speed Sensor Signal Output Line Short Circuit Inspection

Check for continuity between the wire harness side 33P (Black) connector [1] and ground.

Connection: B15 – Ground

Is there continuity?

YES – Short circuit in the Black wire

NO – GO TO STEP 3.

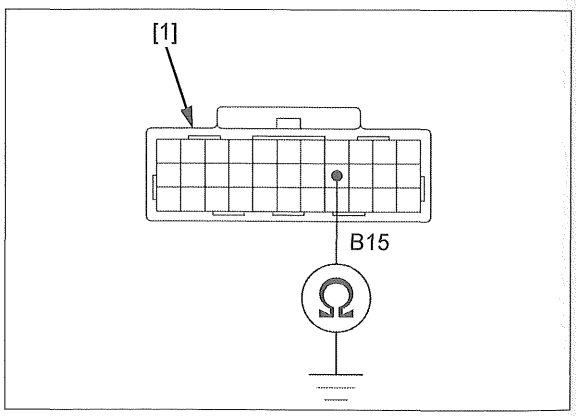

3. ECM Inspection

Replace the ECM with a new one (page 4-55).
Connect the disconnected connector(s).
Erase the DTC (page 4-8).
Perform the test-ride (page 4-13).
Check the DTC with GST or MCS.

Is same DTC indicated?

YES – Replace the ABS modulator with a new one (page 19-25), and recheck.

NO – Faulty original ECM

DTC P2195/P2196

Probable cause:

- Faulty A/F sensor
- Faulty fuel injector or its fuel pressure too low
- Faulty ECT sensor
- Faulty ECM

Symptom/Fail-safe function:

- Hard to start at low temperature
- Exhaust gas too lean or too rich
- Intake air or engine vacuum leaks
- Fuel consumption deterioration
- Driveability deterioration

1. **A/F sensor Inspection**

   Replace the A/F sensor with a new one (page 4-61).
   Erase the DTC (page 4-8).
   Check the DTC with GST or MCS.

   Is same DTC indicated?

   YES – Replace the ECM with a new one (page 4-55), and recheck.

   NO – Faulty original A/F sensor

DTC P2A00

Probable cause:

- Faulty A/F sensor
- There is an exhaust leak
- Faulty ECM

Symptom/Fail-safe function:

- Hard to start at low temperature
- Exhaust gas too lean or too rich
- Intake air or engine vacuum leaks
- Fuel consumption deterioration
- Driveability deterioration

1. **A/F sensor Inspection**

   Replace the A/F sensor with a new one (page 4-61).
   Erase the DTC (page 4-8).
   Start the engine and wait for a minute.
   Check the DTC with GST or MCS.

   Is same DTC indicated?

   YES – Replace the ECM with a new one (page 4-55), and recheck.

   NO – Faulty original A/F sensor

DTC U0001

NOTE:

- When the other DTC is displayed together with DTC U0001, troubleshoot it first.

Probable cause:

- Faulty CAN line(s)
- Faulty CAN connected unit(s)

Symptom/Fail-safe function:

- CAN communication failure

1. CAN Line (ECM-to-TCM) Open Circuit Inspection

Disconnect the following:

– ECM 39P connector (page 4-55)
– TCM 33P (Gray) connector (page 4-55)

Check the continuity between the wire harness side ECM 39P connector [1] and TCM 33P (Gray) connector [2].

Connection:
A31 – Brown (B13)
A30 – Black (B2)

Is there continuity?

YES – GO TO STEP 2.

NO – • Open circuit in the Brown wire
• Open circuit in the Black wire

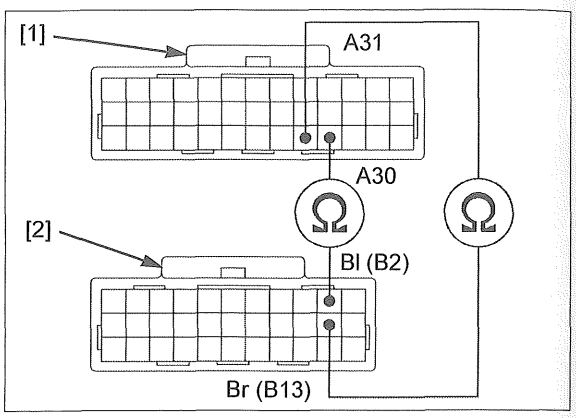

2. CAN Line (ECM-to-BCU) Open Circuit Inspection

Disconnect the BCU 39P (Black) connector (page 21-23).
Check the continuity between the wire harness side ECM 39P connector [1] and BCU 39P (Black) connector [2].

Connection:
A31 – Brown (14)
A30 – Black (15)

Is there continuity?

YES – GO TO STEP 3.

NO – • Open circuit in the Brown wire
• Open circuit in the Black wire

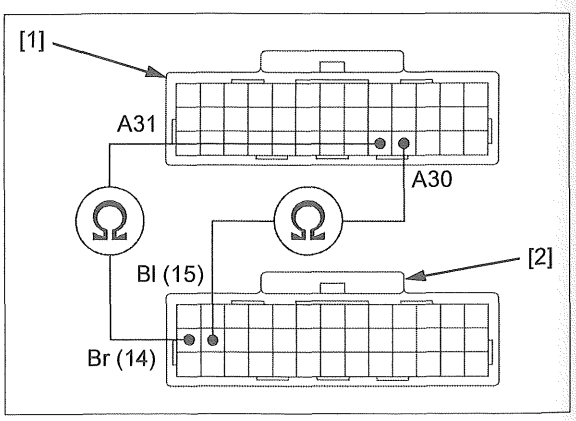

3. CAN Line (ECM-to-Smart Control Unit) Open Circuit Inspection

Disconnect the smart control unit 39P (Black) connector (page 22-20).
Check the continuity between the wire harness side ECM 39P connector [1] and smart control unit 39P (Black) connector [2].

Connection:
A31 – Brown (36)
A30 – Black (35)

Is there continuity?

YES – GO TO STEP 4.

NO – • Open circuit in the Brown wire
• Open circuit in the Black wire

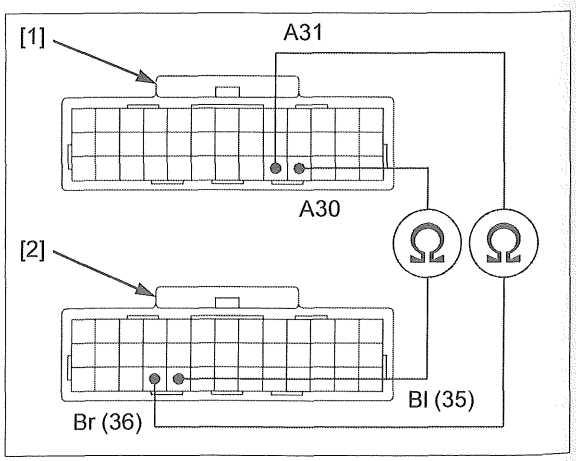

4. **CAN Line (ECM-to-Combination Meter) Open Circuit Inspection**

Disconnect the combination meter 24P connector (page 21-7).
Check the continuity between the wire harness side ECM 39P connector [1] and combination meter 24P connector [2].

Connection:
A31 – Brown
A30 – Black

Is there continuity?

YES – GO TO STEP 5.

NO – • Open circuit in the Brown wire
• Open circuit in the Black wire

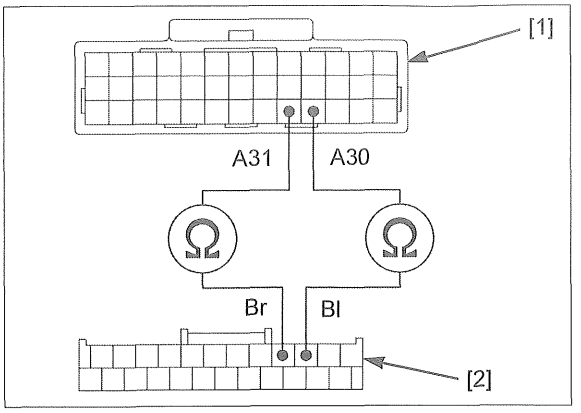

5. **CAN Line (ECM-to-ABS Modulator) Open Circuit Inspection**

Disconnect the ABS modulator 18P connector (page 19-7).
Check the continuity between the wire harness side ECM 39P connector [1] and ABS modulator 18P connector [2].

Connection:
A31 – Brown (2)
A30 – Black (11)

Is there continuity?

YES – GO TO STEP 6.

NO – • Open circuit in the Brown wire
• Open circuit in the Black wire

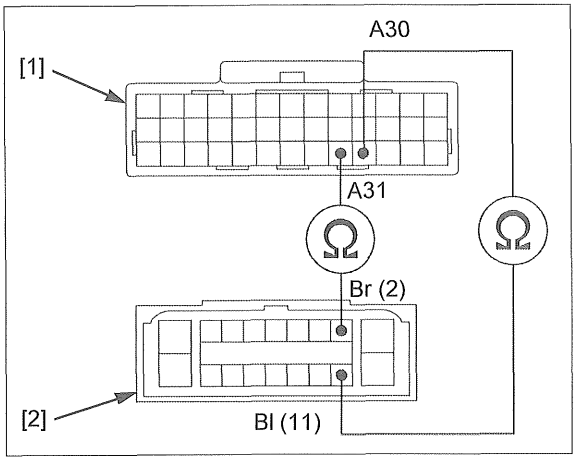

6. **CAN Line Short Circuit Inspection**

Check for continuity between the wire harness side ECM 39P connector [1] and ground.

Connection:
A31 – Ground
A30 – Ground

Is there continuity?

YES – • Short circuit in the Brown wire
• Short circuit in the Black wire

NO – GO TO STEP 7.

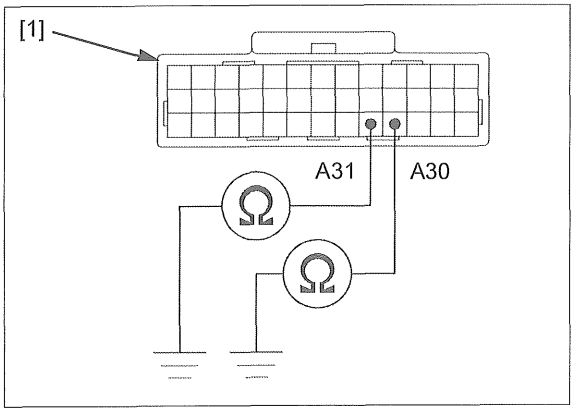

7. **Communicated Part Inspection**

Connect the disconnected connector(s).
Erase the DTC (page 4-8).
Replace the TCM, smart control unit, combination meter, and ABS modulator one by one in order with a new one.
Turn the ignition switch ON and wait for 10 seconds.
Check the DTC with GST or MCS.

Is same DTC indicated?

YES – Replace the ECM with a new one (page 4-55), and recheck.

NO – Faulty original part

DTC U0155

Probable cause:

- Faulty CAN line(s)
- Faulty combination meter
- Faulty ECM

Symptom/Fail-safe function:

- CAN communication failure

1. CAN Line Open Circuit Inspection

Disconnect the following:

– ECM 39P connector (page 4-55)
– Combination meter 24P connector (page 21-7)

Check the continuity between the wire harness side 39P connector [1] and 24P connector [2].

Connection:
A31 – Brown
A30 – Black

Is there continuity?

YES – GO TO STEP 2.

NO – • Open circuit in the Brown wire
• Open circuit in the Black wire

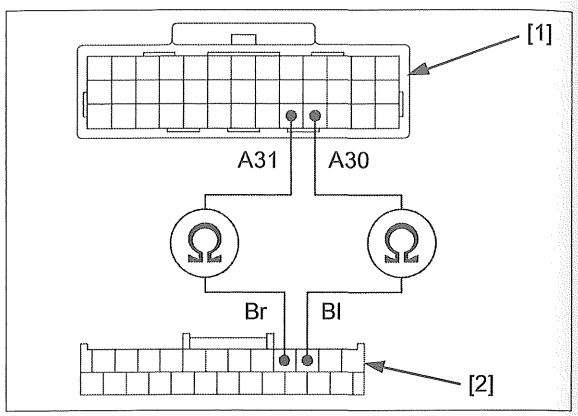

2. Combination Meter Inspection

Replace the combination meter with a new one (page 21-7).
Connect the disconnected connector(s).
Erase the DTC (page 4-8).
Turn the ignition switch ON and wait for 10 seconds.
Check the DTC with GST or MCS.

Is same DTC indicated?

YES – Replace the ECM with a new one (page 4-55), and recheck.

NO – Faulty original combination meter

DTC U0168

Probable cause:

- Faulty CAN line(s)
- Faulty smart control unit
- Faulty ECM

Symptom/Fail-safe function:

- CAN communication failure

1. CAN Line Open Circuit Inspection

Disconnect the following:

– ECM 39P connector (page 4-55)
– Smart control unit 39P connector (page 22-20)

Check the continuity between the wire harness side ECM 39P connector [1] and smart control unit 39P connector [2].

Connection:
A31 – Brown (36)
A30 – Black (35)

Is there continuity?

YES – GO TO STEP 2.

NO – • Open circuit in the Brown wire
• Open circuit in the Black wire

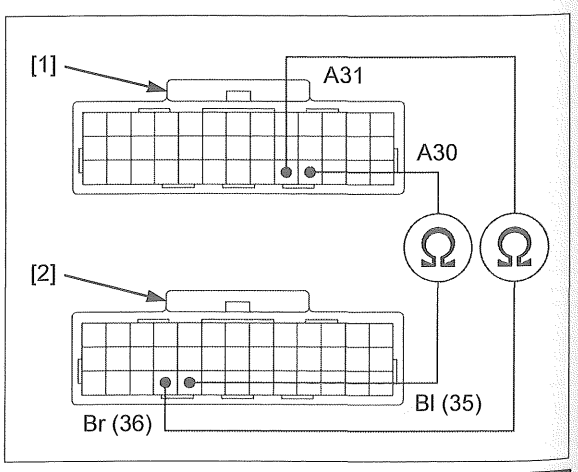

2. **Smart Control Unit Inspection**

Replace the smart control unit with a new one (page 22-20).
Connect the disconnected connector(s).
Erase the DTC (page 4-8).
Turn the ignition switch ON and wait for 10 seconds.
Check the DTC with GST or MCS.

Is same DTC indicated?

YES – Replace the ECM with a new one (page 4-55), and recheck.

NO – Faulty original smart control unit

DTC U019E

Probable cause:

- Faulty power train CAN line(s)
- Faulty TCM
- Faulty ECM

Symptom/Fail-safe function:

- Power train CAN communication failure

1. **Power Train CAN Line Open Circuit Inspection**

Disconnect the following:

– ECM 33P (Gray) connector (page 4-55)
– TCM 33P (Black) connector (page 4-55)

Check for continuity between the wire harness side ECM 33P (Gray) connector [1] and TCM 33P (Black) connector [2].

CONNECTION:
C25 – White (A33)
C24 – Black (A21)

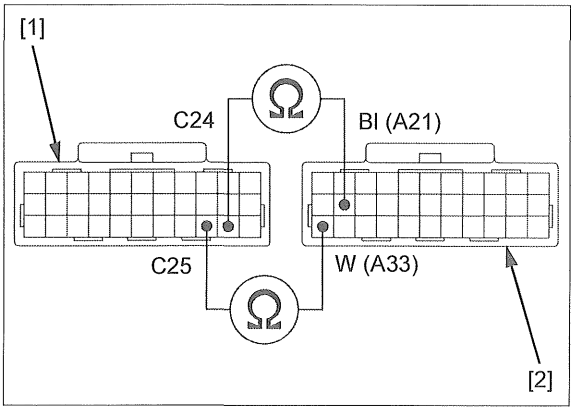

Is there continuity?

YES – GO TO STEP 2.

NO – • Open circuit in the White wire
• Open circuit in the Black wire

2. **Power Train CAN Line Short Circuit Inspection**

Check for continuity between the wire harness side ECM 33P (Gray) connector [1] and ground.

CONNECTION:
C25 – Ground
C24 – Ground

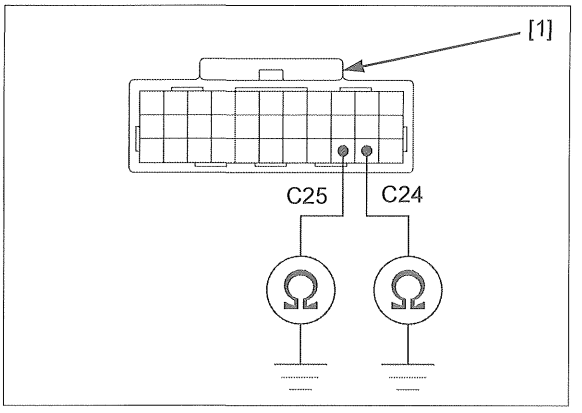

Is there continuity?

YES – • Short circuit in the White wire
• Short circuit in the Black wire

NO – GO TO STEP 3.

3. **TCM Inspection**

   Replace the TCM with a new one (page 4-55).
   Connect the disconnected connector(s).
   Erase the DTC (page 4-8).
   Turn the ignition switch ON and wait for 10 seconds.
   Check the DTC with GST or MCS.

   Is same DTC indicated?

   YES – Replace the ECM with a new one (page 4-55), and recheck.

   NO – Faulty original TCM

MIL CIRCUIT TROUBLESHOOTING

When The Engine Starts But The MIL Does Not Come On

Check that the MIL comes on a few seconds and goes OFF when the ignition switch is turned ON.

If the MIL and digital display do not function at all, refer to combination meter power/ground line inspection (page 21-8).

When The Ignition Switch Is Turned ON, The MIL Does Not Go Off Within A Few Seconds (Engine Starts)

Disconnect the ECM 39P connector (page 4-55).

Check for continuity between the wire harness side 39P connector [1] and ground.

TOOL:
Test probe **07ZAJ-RDJA110**

Connection: A19 – Ground

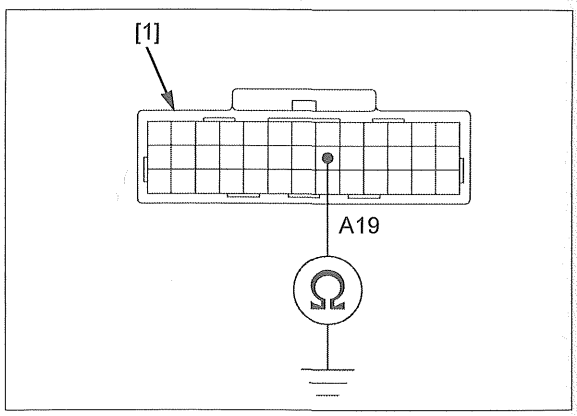

If there is continuity, check for short circuit in the Brown wire between the DLC and ECM.

If there is no continuity, replace the ECM with a new one (page 4-55), and recheck.

ECM/TCM

NOTE:

- If the ECM is replaced, perform the following:
  - ECM registration procedure (page 22-17)
  - Crank pulse initialize learning procedure (page 4-60)
- If the TCM is replaced, perform the clutch initialize learning procedure (page 11-62).

REMOVAL/INSTALLATION

Remove the fuel tank (page 7-6).

Unhook the heat guard rubber [1] from the frame.

Remove the bolts [2] and FI unit box [3] from the frame.

Remove the clips [4] and open the box lid.

Remove the ECM [5] and TCM [6] from the FI unit box.

Disconnect the ECM 33P/39P connectors [7] and TCM 39P connectors [8].

Installation is in the reverse order of removal.

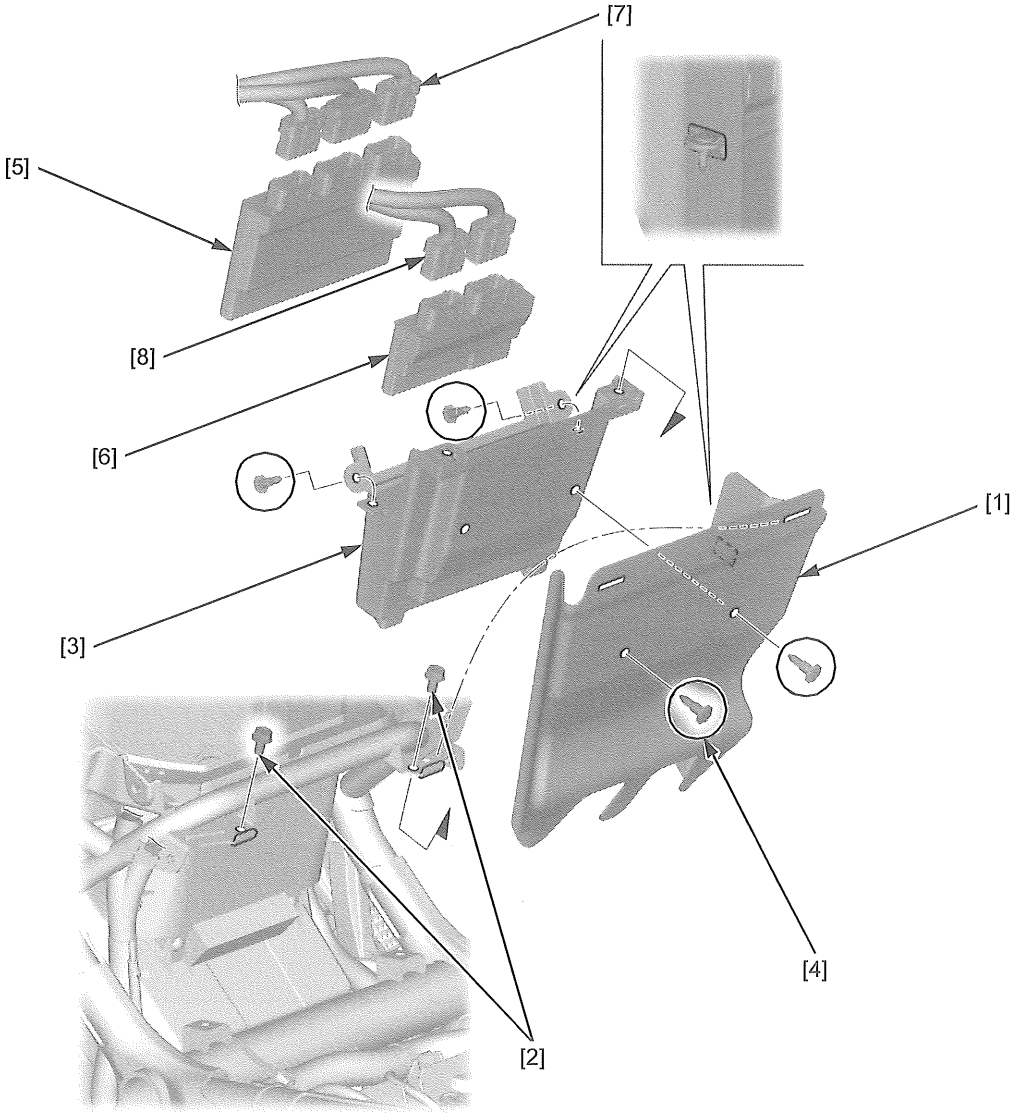

POWER/GROUND LINE INSPECTION

POWER INPUT LINE

Disconnect the ECM 39P connector (page 4-55).

Temporarily install the ignition switch.

Measure the voltage between the wire harness side ECM 39P connector [1] and ground.

TOOL:
Test probe **07ZAJ-RDJA110**

CONNECTION: A11 (+) – Ground (–)

There should be battery voltage with the ignition switch turned ON.

If there is no voltage, check the following:

- Open circuit in the Black wire between the ECM 39P connector and fuse box.
- Blown FI 1 fuse (10 A)

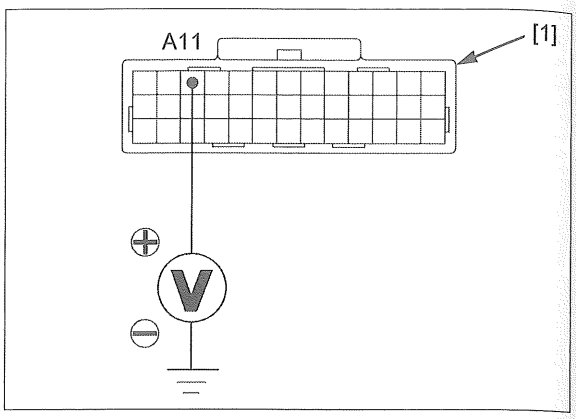

GROUND LINE

Disconnect the ECM 39P and 33P (Black) connectors (page 4-55).

Check for continuity between the following connector terminals and ground:

- ECM 39P connector [1]
- ECM 33P (Black) connector [2]

TOOL:
Test probe **07ZAJ-RDJA110**

CONNECTION: A9 – Ground
A10 – Ground
A22 – Ground
A23 – Ground
A24 – Ground
B12 – Ground

There should be continuity at all times.

If there is no continuity, check for open circuit in the Green wire.

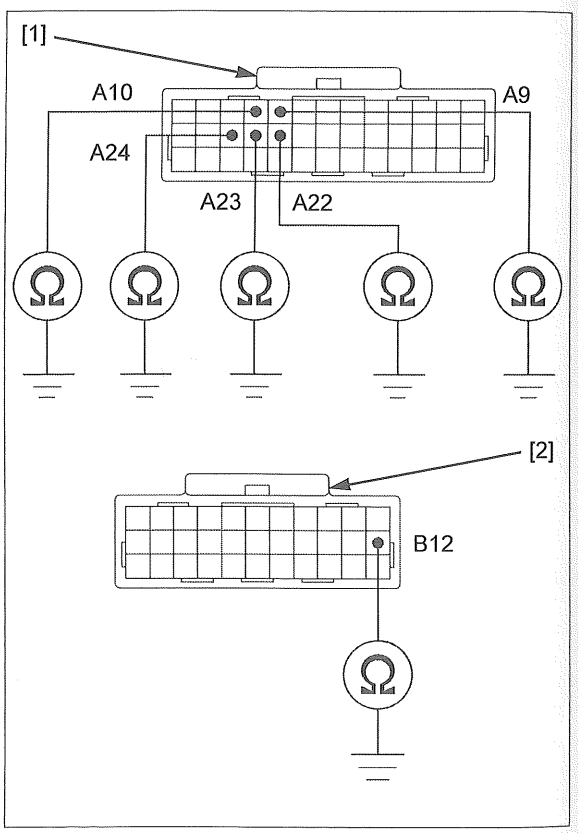

VS SENSOR

REMOVAL/INSTALLATION

Remove the heat guard (page 2-24).

Disconnect the VS sensor 3P (Black) connector [1].

Remove the bolt [2] and VS sensor [3].

Remove the O-ring [4] from the VS sensor.

Installation is in the reverse order of removal.

TORQUE: 12 N·m (1.2 kgf·m, 9 lbf·ft)

NOTE:

- Replace the O-ring with a new one.
- Apply engine oil to a new O-ring.

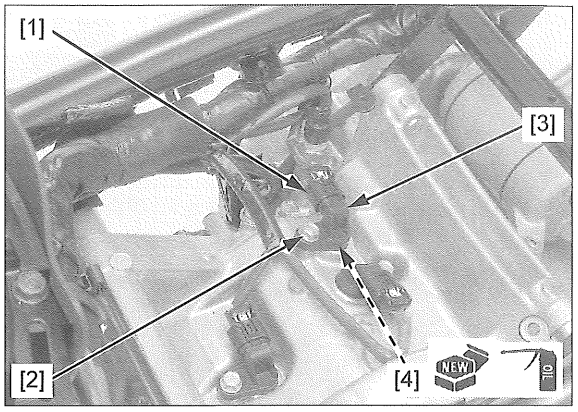

MAP SENSOR

REMOVAL/INSTALLATION

Remove the fuel tank (page 7-6).

Remove the screw [1].

Disconnect the hose [2] and MAP sensor 3P (Black) connector [3].

Remove the screw [4] and MAP sensor [5] from the stay [6].

Installation is in the reverse order of removal.

TORQUE:

MAP sensor stay screw:
4.9 N·m (0.5 kgf·m, 3.6 lbf·ft)

MAP sensor screw:
4.9 N·m (0.5 kgf·m, 3.6 lbf·ft)

NOTE:

- Install the MAP sensor stay onto the throttle body by aligning the hole with the boss.

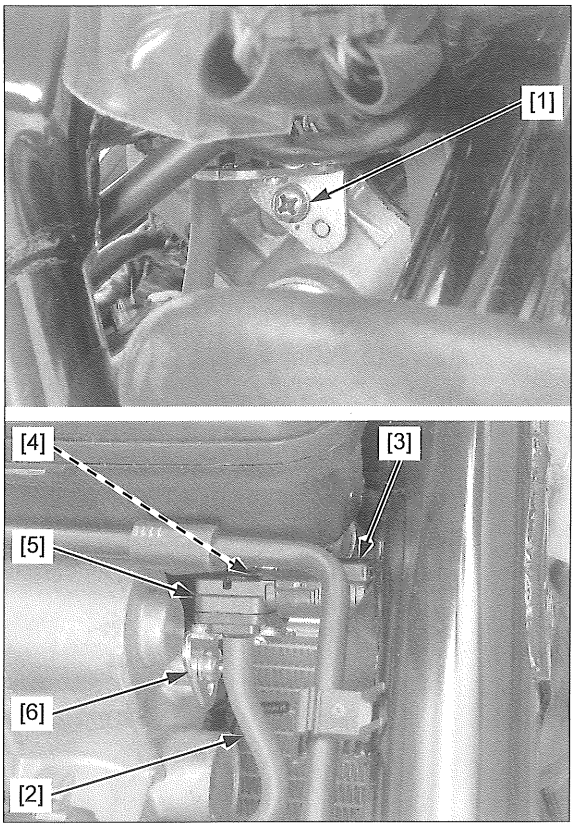

IAT SENSOR

REMOVAL/INSTALLATION

Remove the inner/inner center/front inner cowl (page 2-9).

Disconnect the IAT sensor 2P (Black) connector [1].

Remove the screws [2] and IAT sensor [3].

Installation is in the reverse order of removal.

TORQUE: 1.0 N·m (0.1 kgf·m, 0.7 lbf·ft)

NOTE:

- Check the O-ring for deterioration or damage and replace the IAT sensor/O-ring if necessary.

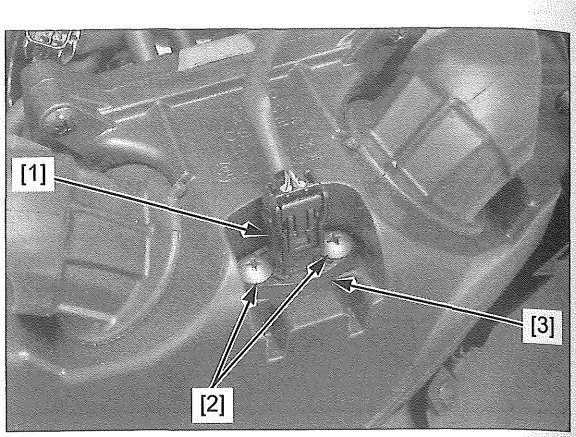

ECT SENSOR

REMOVAL/INSTALLATION

Drain the coolant (page 8-4).

Remove the heat guard (page 2-24).

Disconnect the ECT sensor 2P (Black) connector [1].

Remove the ECT sensor/O-ring [2].

Installation is in the reverse order of removal.

TORQUE:
ECT sensor:
12 N·m (1.2 kgf·m, 9 lbf·ft)

NOTE:

- Check the O-ring for deterioration or damage and replace the ECT sensor/O-ring if necessary.

Fill the cooling system with recommended coolant (page 8-4).

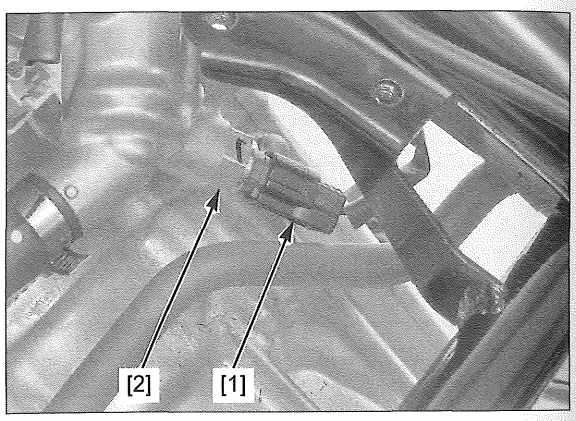

BANK ANGLE SENSOR

REMOVAL/INSTALLATION

Remove the upper meter cover/front cowl/air intake cover (page 2-17).

Disconnect the bank angle sensor 2P (Black) connector [1].

Remove the bolts [2] and bank angle sensor [3].

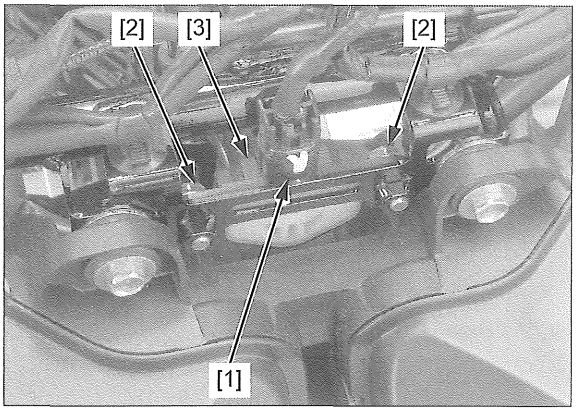

Installation is in the reverse order of removal.

NOTE:

- Install the bank angle sensor [1] with its "UP" mark [2] facing up.

TORQUE:

Bank angle sensor bolt:
10 N·m (1.0 kgf·m, 7 lbf·ft)

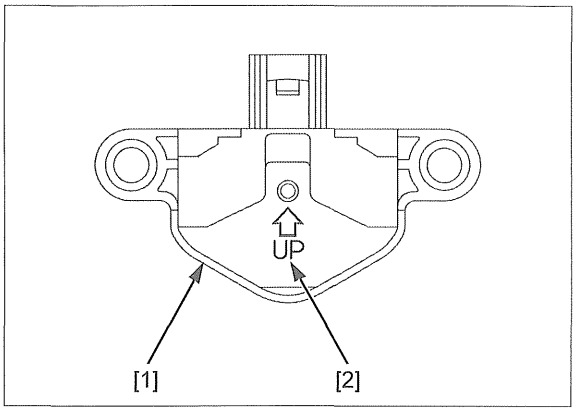

SYSTEM INSPECTION

Remove the bank angle sensor (page 4-59).

Connect the bank angle sensor 2P (Black) connector.

Place the bank angle sensor horizontally as shown.

Turn the ignition switch ON.

Read the voltage with the GST or MCS.

STANDARD: 4.65 – 7.01 V

Incline the bank angle sensor approximately 70° to the left or right with keeping the ignition switch ON.

Read the voltage with GST or MCS.

STANDARD: 0.40 – 0.84 V

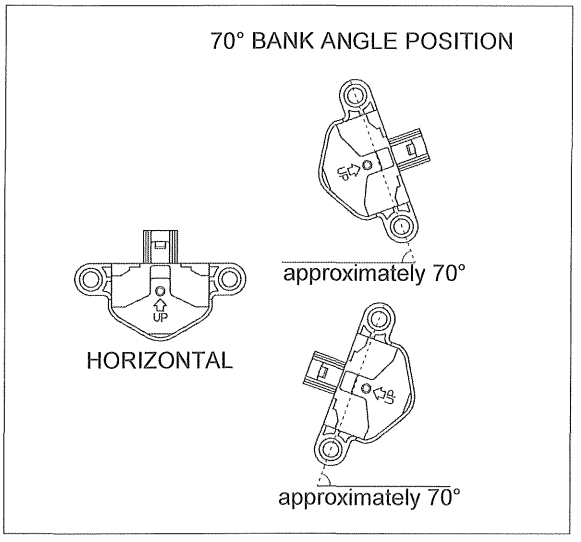

CKP SENSOR

REMOVAL/INSTALLATION

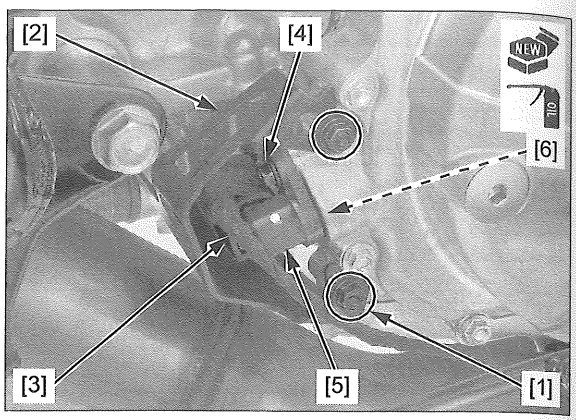

Remove the left step panel/side panel (page 2-18).

Remove the bolts [1] and CKP sensor guard [2].

Disconnect the CKP sensor 3P (Black) connector [3].

Remove the CKP sensor bolt [4] and CKP sensor [5].

Remove the O-ring [6] from the CKP sensor.

Installation is in the reverse order of removal.

NOTE:

- Replace the O-ring with a new one.
- Apply engine oil to a new O-ring.

TORQUE:

CKP sensor bolt:

12 N·m (1.2 kgf·m, 9 lbf·ft)

CRANK PULSE LEARNING

NOTE:

- If you done the following works, perform the crank pulse learning reset procedure and crank pulse initialize learning procedure.
  Perform the crank pulse learning reset procedure first, and then the crank pulse initialize learning procedure.
  – CKP sensor removing
  – Alternator cover removing
  – Flywheel removing
  – Stator removing
  – Crankcase separation
  – Crankshaft removing
  – Main journal bearings removing
- If you replace the ECM, perform the crank pulse initialize learning procedure.

CRANK PULSE LEARNING RESET PROCEDURE

1. Connect the SCS short connector to the DLC (page 4-7).
2. Turn the ignition switch ON.

   Open the throttle grip fully within 5 seconds.
   Close the throttle grip completely within 3 seconds.
   Wait for more than 10 seconds.
3. Turn the ignition switch OFF.

   Disconnect the SCS short connector from the DLC.
4. Turn the ignition switch ON.

   Check the MIL.
   If the MIL blinks, crank pulse learning reset procedure is successful.

   Turn the ignition switch OFF.

NOTE:

- If the crank pulse learning reset procedure is unsuccessful, perform the reset procedure from step 1 again.

CRANK PULSE INITIALIZE LEARNING PROCEDURE

1. Connect the SCS short connector to the DLC (page 4-7).
2. Turn the ignition switch ON.

   Open the throttle grip fully within 5 seconds.

   Close the throttle grip completely after 3 seconds.

   Start the engine within 5 seconds.
3. Warm up the engine (engine coolant temperature: 40 – 94°C/104 – 201°F).

   Rev the engine up to 6,500 min^{-1} (rpm) or higher more than 5 times.
4. Turn the ignition switch OFF.

   Disconnect the SCS short connector from the DLC.
5. Turn the ignition switch ON.

   Check the MIL.

   If the MIL stays on for a few seconds then go off, crank pulse learning procedure is successful.

   Turn the ignition switch OFF.

NOTE:

- If the crank pulse learning procedure is unsuccessful, perform the learning procedure from step 1 again.

A/F SENSOR

REMOVAL/INSTALLATION

NOTICE

- *Handle the A/F sensor with care.*
- *Do not get grease, oil, or other materials in the A/F sensor air hole.*
- *Be careful not to damage the sensor wire.*
- *Do not use an impact wrench while removing or installing the A/F sensor.*

Remove the front lower cover (page 2-13).

Disconnect the A/F sensor 4P (Black) connector [1].

Remove the A/F sensor [2] using the special tool.

TOOL:

Sensor socket wrench [3]	**FRXM17 (Snap on) or equivalent**

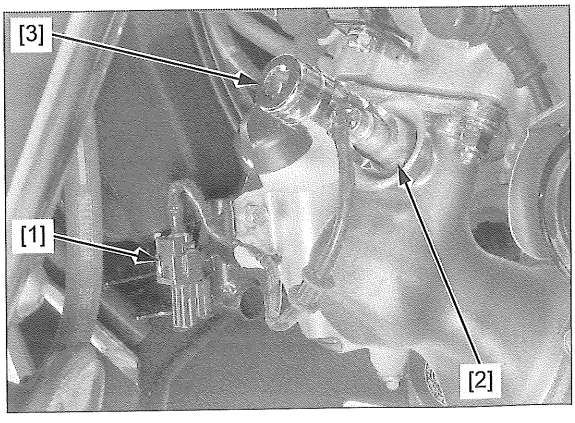

Installation is in the reverse order of removal.

TORQUE: 24.5 N·m (2.5 kgf·m, 18 lbf·ft)

SIDESTAND SWITCH

REMOVAL/INSTALLATION

Remove the step panel/side panel (page 2-18).

Release the sidestand switch 2P (Black) connector [1] from the connector setting stay and disconnect it.

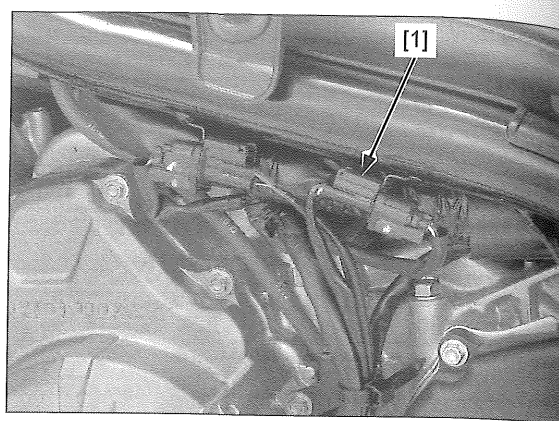

Release the wire band [1].

Release the sidestand switch wire [2] from the stay [3].

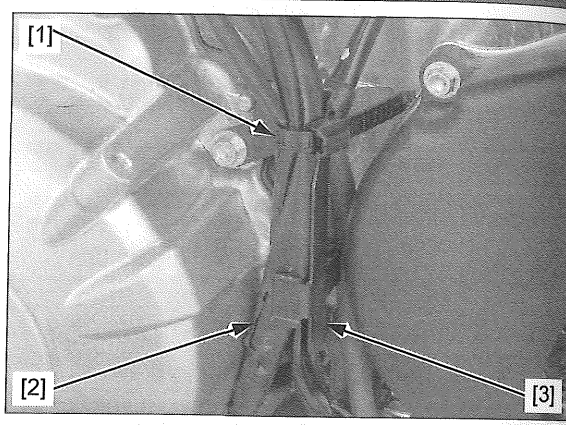

Remove the wire clip [1].

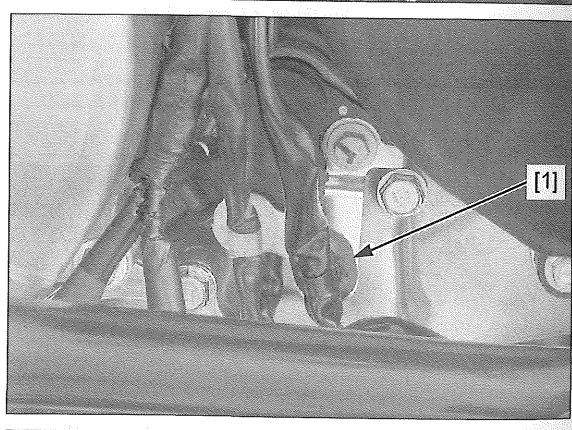

Remove the sidestand switch mounting bolt [1] and sidestand switch [2].

Installation is in the reverse order of removal.

NOTE:

- Replace the sidestand switch mounting bolt with a new one.
- Align the sidestand switch tab with the sidestand hole.
- Align the sidestand switch groove with the return spring holding pin.

TORQUE:

Sidestand switch bolt:
10 N·m (1.0 kgf·m, 7 lbf·ft)

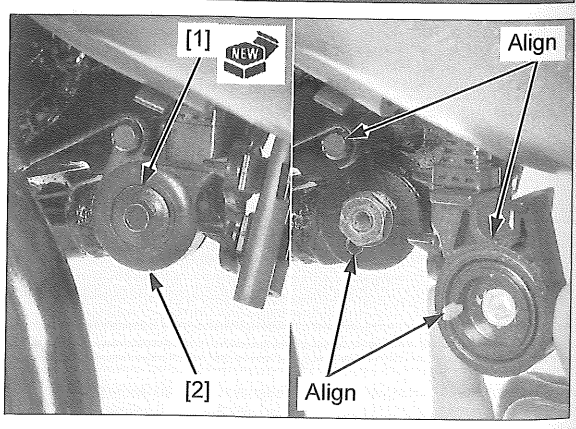

SERVICE INFORMATION 5-2
TROUBLESHOOTING 5-3
SYSTEM LOCATION 5-4
SYSTEM DIAGRAM 5-5
IGNITION SYSTEM INSPECTION 5-6
IGNITION TIMING 5-9
IGNITION COIL 5-9

SERVICE INFORMATION

GENERAL

NOTICE

- *The ECM may be damaged if dropped. Also if the connector is disconnected when current is flowing, the excessive voltage may damage the module. Always turn off the ignition switch before servicing.*
- *Use spark plug of the correct heat range. Using a spark plug with an incorrect heat range can damage the engine.*

- When servicing the ignition system, always follow the checks described in the troubleshooting table (page 5-3).
- Some electrical components may be damaged if terminals or connectors are connected or disconnected while the ignition switch is turned to ON position and current is present.
- A faulty ignition system is often related to poorly connected or corroded connections. Check those connections before proceeding.
- Make sure the battery is adequately charged. Using the starter motor with a weak battery results in a slower engine cranking speed as well as no spark at the spark plug.
- Refer to following components informations:
  - Honda SMART Key SYSTEM (page 22-2)
  - Bank angle sensor (page 4-59)
  - ECM (page 4-55)
  - CKP sensor (page 4-60)
  - Sidestand switch (page 4-62)
  - Engine stop switch/starter switch (page 21-17)
  - Neutral switch (page 11-61)
  - Main relay/engine stop relay (page 21-22)
- The following color codes are used throughout this section.

Be = Beige	Bl = Black	Br = Brown	Bu = Blue	G = Green	Gr = Gray	Lb = Light blue
Lg = Light green	O = Orange	P = Pink	R = Red	V = Violet	W = White	Y = Yellow

TROUBLESHOOTING

- Inspect the following before diagnosing the system.
  - Faulty spark plug
  - Loose spark plug cap or spark plug wire connection
  - Loose ignition coil connectors
  - Water got into the spark plug cap (Leaking the ignition coil secondary voltage)
- "Initial voltage" of the ignition primary coil is the battery voltage with the ignition switch turned ON (The engine is not cranked by the starter motor).

No spark at spark plug

Unusual condition		Probable cause (Check in numerical order)
Ignition coil primary voltage	No initial voltage with the ignition switch ON (Other electrical components are normal).	1. Faulty main relay or its related circuits 2. An open circuit in Red/black wire between the main relay and FI 1 fuse 3. Blown FI 1 fuse 4. An open circuit in Black wire between the FI 1 fuse and ignition coil 5. Loose or poor connection of the primary terminal, or an open circuit in the primary coil 6. Faulty ECM (in case when the initial voltage is normal with the ECM connector disconnected)
	Initial voltage is normal, but it drops by 2 – 4 V while cranking the engine.	1. Incorrect peak voltage adaptor connections (System is normal if measured voltage is over the specifications with reverse connections) 2. Battery is undercharged (Voltage drops largely when the engine is started) 3. An open circuit or loose connection in the ECM power/ground lines. 4. An open circuit or loose connection in Blue/white or Yellow/blue wire between the ignition coil and ECM 5. Faulty sidestand switch or its related circuits 6. Faulty CKP sensor or its related circuits 7. Faulty ECM (in case when above No. 1 through 6 are normal).
	Initial voltage is normal but there is no peak voltage while cranking the engine.	1. Incorrect peak voltage adaptor connections. 2. Faulty peak voltage adaptor. 3. Faulty CKP sensor 4. Faulty ECM (in case when above No. 1 through 3 are normal).
	Initial voltage is normal but peak voltage is lower than the standard value.	1. The multimeter impedance is too low; below 10 MΩ/DCV 2. Cranking speed is too slow (Battery is undercharged) 3. The sampling timing of the tester and measured pulse were not synchronized (System is normal if measured voltage is over the standard voltage at least once). 4. Faulty ignition coil 5. Faulty ECM (in case when above No. 1 through 4 are normal)
	Initial and peak voltages are normal but no spark jumps.	1. Faulty spark plug or leaking ignition coil secondary current ampere 2. Faulty ignition coil

SYSTEM LOCATION

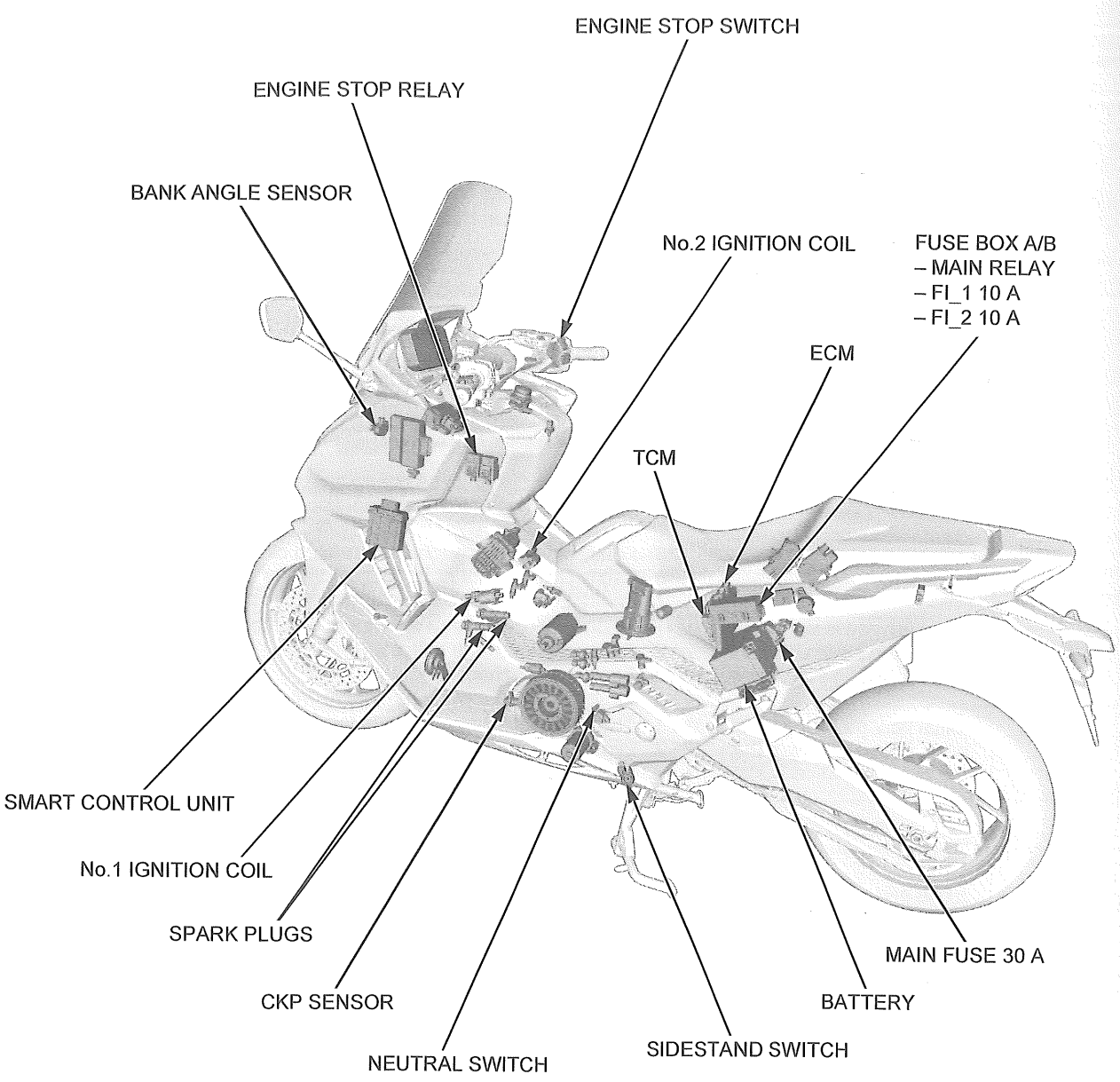

SYSTEM DIAGRAM

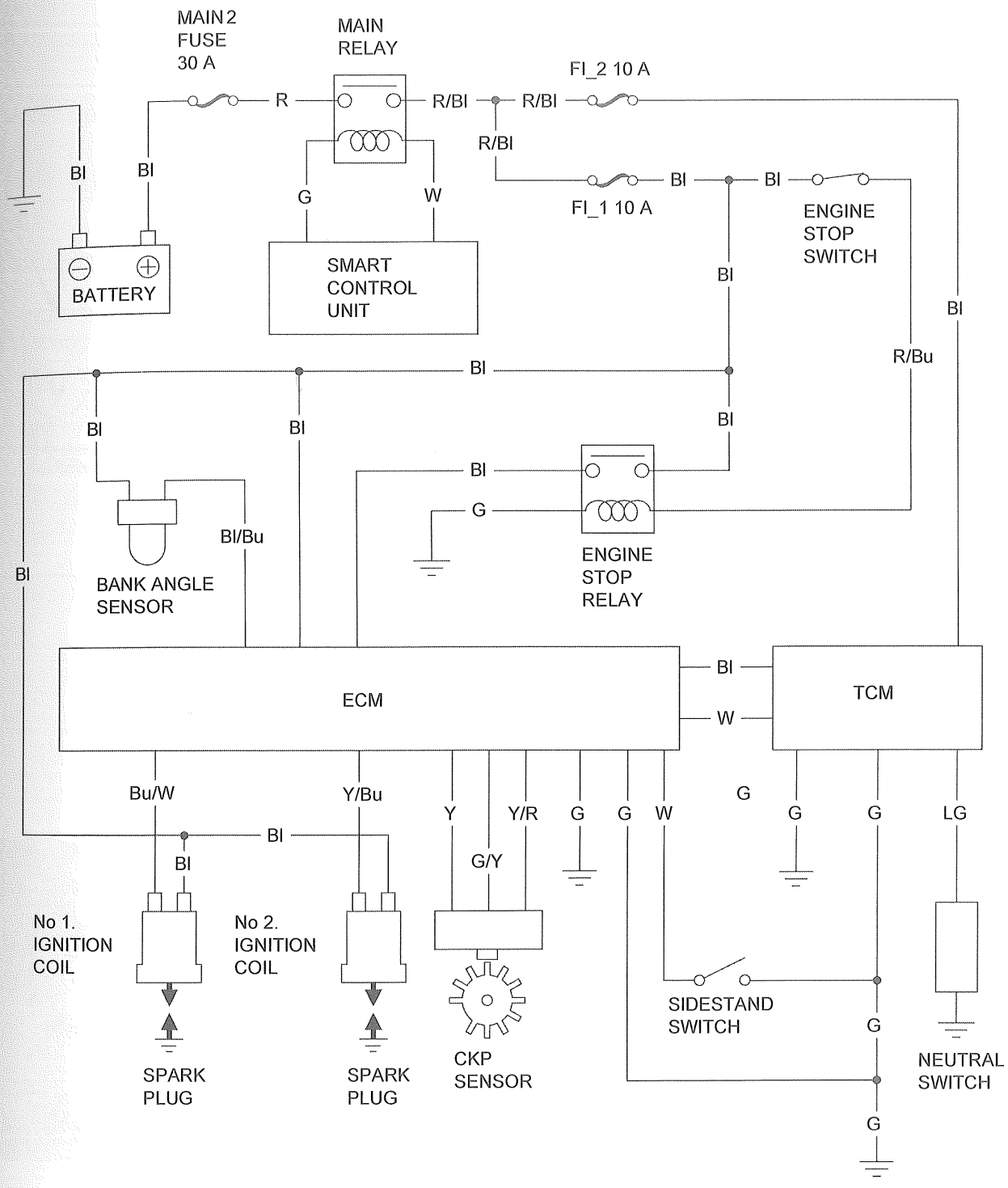

IGNITION SYSTEM INSPECTION

NOTE:

- If there is no spark at the plug, check all connections for loose or poor contact before measuring the peak voltage.
- Use a commercially available digital multimeter with an impedance of 10 MΩ/DCV minimum.
- The display value differs depending upon the internal impedance of the multimeter.
- If using the imrie diagnostic tester (MODEL 625), follow the manufacturer's instructions.

Connect the peak voltage adaptor [1] to the digital multimeter [2], or use the peak voltage tester.

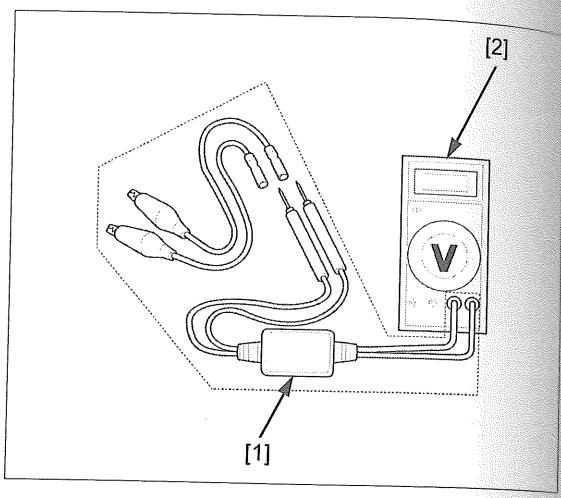

TOOLS:
Imrie diagnostic tester (model 625) or
Peak voltage adaptor 07HGJ-0020100
with commercially available digital multimeter
(impedance 10 MΩ/DCV minimum)

IGNITION COIL PRIMARY PEAK VOLTAGE

NOTE:

- Check all system connections before performing this inspection. Loose connectors can cause incorrect readings.
- If the system is disconnected, incorrect peak voltage might be measured.
- Check the cylinder compression and check that the spark plug is installed correctly in the cylinder head.

No.1 ignition coil: Remove the front side cowls (page 2-15).

No.2 ignition coil: Remove the center lower cover (page 2-21).

Disconnect the spark plug caps (page 3-6).

Connect a known good spark plug [1] to the spark plug cap [2] and ground it to the cylinder head as done in a spark test.

Temporarily install the ignition switch.

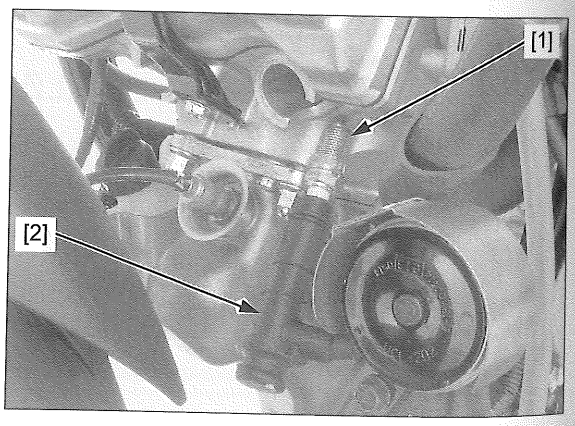

Do not disconnect the ignition coil primary wire.

With the ignition coil primary wire connected, connect the peak voltage adaptor or Imrie tester to the ignition coil primary terminal [1] and ground.

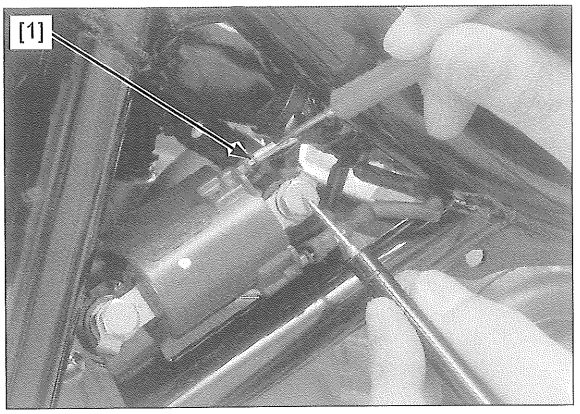

TOOLS:
Imrie diagnostic tester (model 625) or Peak voltage adaptor **07HGJ-0020100**
with commercially available digital multimeter (impedance 10 MΩ/DCV minimum)

CONNECTION:
No.1: Blue/white (+) – Ground (–)
No.2: Yellow/blue (+) – Ground (–)

Turn the ignition switch ON.

Check the initial voltage at this time.

The battery voltage should be measured.

If the initial voltage cannot be measured, follow the checks described in the troubleshooting table (page 5-3).

Crank the engine with the starter motor and measure the ignition coil primary peak voltage.

PEAK VOLTAGE: 100 V minimum

If the peak voltage is abnormal, follow the checks described in the troubleshooting table (page 5-3).

Install the front side cowls (page 2-15).

Install the center lower cover (page 2-21).

CKP SENSOR CIRCUIT INSPECTION

Remove the step panel/side panel (page 2-18).

Remove the bolts [1] and CKP sensor guard [2].

Disconnect the CKP sensor 3P (Black) connector [3].

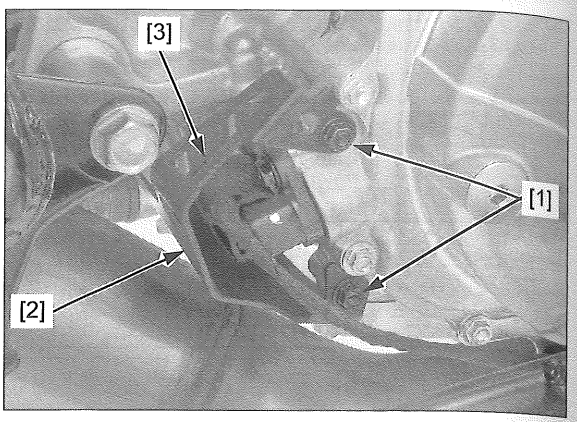

POWER INPUT/GROUND LINE INSPECTION

Temporarily install the ignition switch.

Turn the ignition switch ON.

Measure the voltage at the wire harness side CKP sensor 3P (Black) connector [1].

CONNECTION: Yellow/red (+) – Green/yellow (–)
STANDARD: 4.75 – 5.25 V

If standard voltage does not appear, check for open circuit in the Yellow/red wire and/or Green/yellow wire.

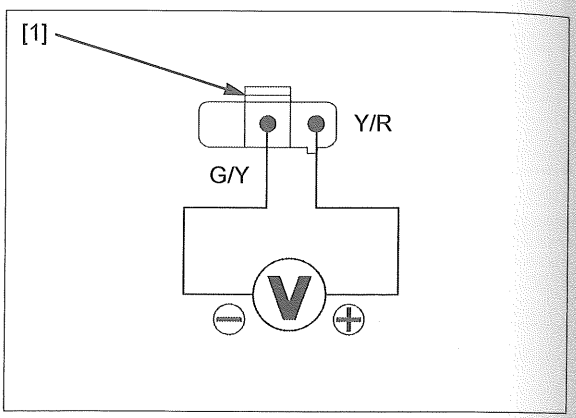

SIGNAL LINE INSPECTION

Turn the ignition switch OFF.

Disconnect the ECM 33P (Black) connector (page 4-55).

Check for continuity between the wire harness side 3P (Black) connector [1] and 33P (Black) connector [2].

TOOL:
Test probe 07ZAJ-RDJA110

CONNECTION: Yellow – B16

If there is no continuity, check for open circuit in the Yellow wire.

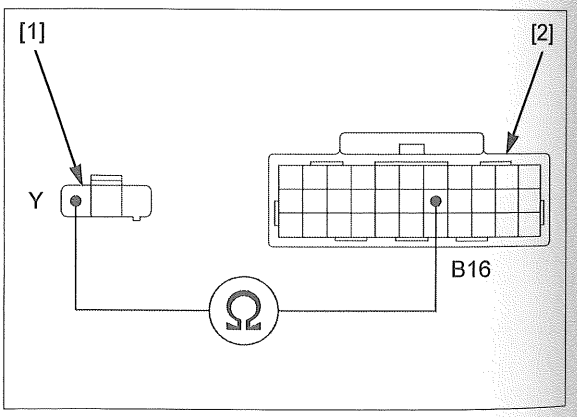

Check for continuity between the wire harness side 3P (Black) connector [1] and ground.

CONNECTION: Yellow – Ground

If there is continuity, check for short circuit in the Yellow wire.

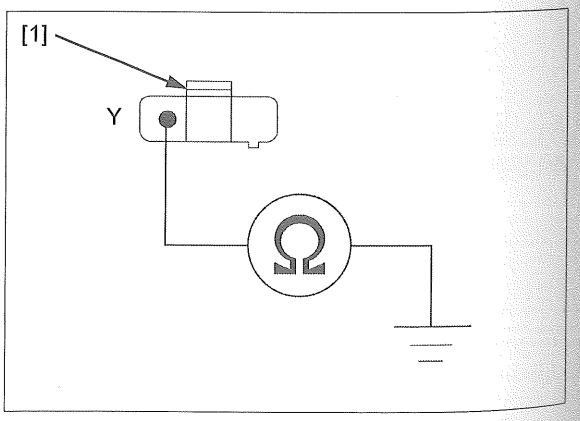

IGNITION TIMING

Remove the step panel/side panel (page 2-18).

Temporarily install the ignition switch.

Warm up the engine.

Stop the engine and remove the timing hole cap (page 3-7).

Connect the timing light [1] to the spark plug wire.

NOTE:

- Read the instructions for timing light operation.

Start the engine and let it idle.

IDLE SPEED: 1,200 ± 100 min^{-1} (rpm)

The ignition timing is correct if the "F" mark [2] on the flywheel aligns with the index notch [3] on the alternator cover.

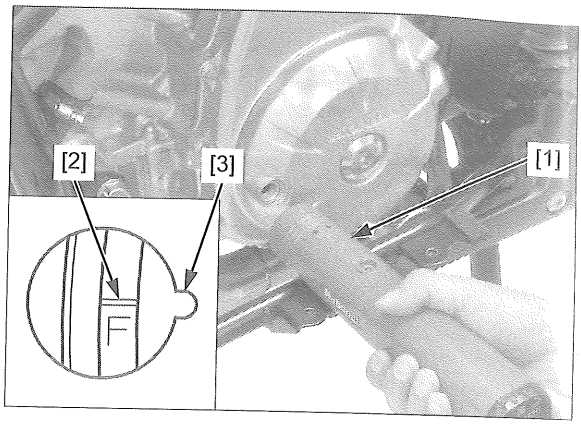

Install the timing hole cap (page 3-8).

Install the step panel/side panel (page 2-18).

IGNITION COIL

REMOVAL/INSTALLATION

No.1 IGNITION COIL

Remove the left front side cowl (page 2-15).

Disconnect the spark plug cap (page 3-6).

Release the spark plug wire [1] from the wire clamp [2].

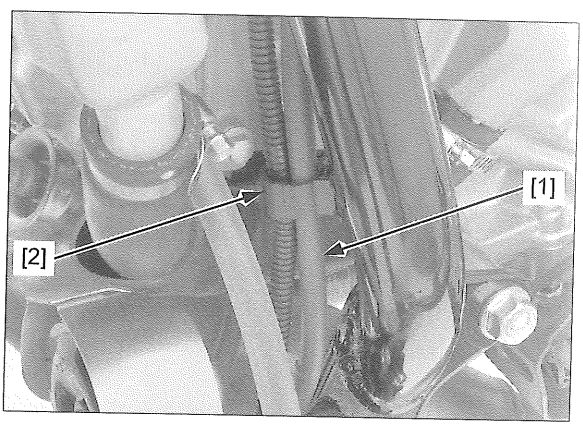

Disconnect the wire connectors [1].

Remove the bolts [2], spacers [3], and ignition coil [4] from the ignition coil stay.

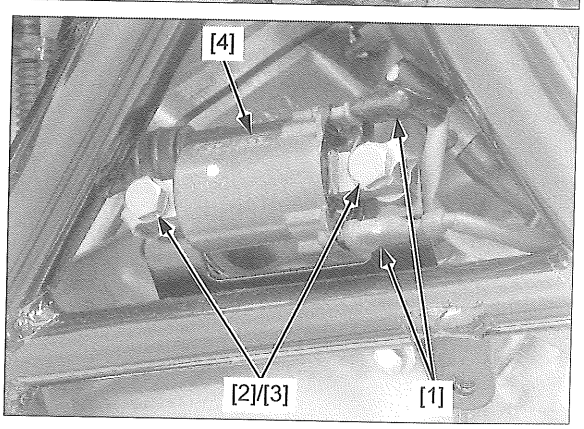

Installation is in the reverse order of removal.

NOTE:

- Route the wires properly (page 1-20).

No.2 IGNITION COIL

Remove the center lower cover (page 2-21).

Disconnect the spark plug cap (page 3-6).

Release the spark plug wire [1] from the wire clamp [2].

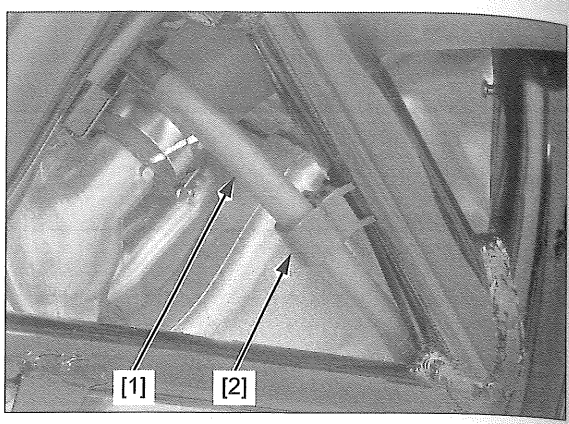

Disconnect the primary wire connectors [1].

Remove the socket bolts [2] and ignition coil assembly [3].

Remove the bolts [4], spacers [5] and ignition coil [6].

Installation is in the reverse order of removal.

NOTE:

- Route the wires properly (page 1-20).

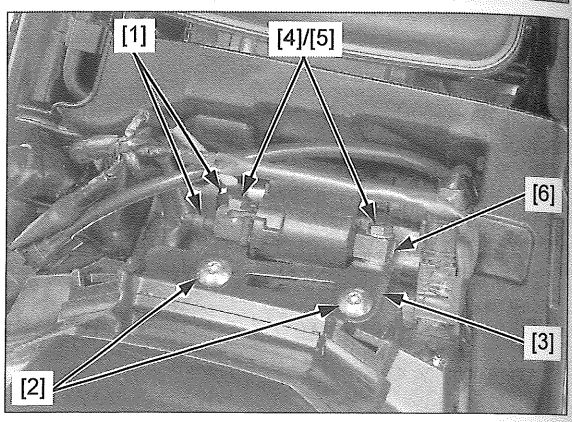

SERVICE INFORMATION 6-2
TROUBLESHOOTING 6-2
SYSTEM LOCATION 6-3
SYSTEM DIAGRAM 6-4
STARTER MOTOR 6-5
STARTER RELAY SWITCH 6-7

SERVICE INFORMATION 6-2
TROUBLESHOOTING 6-2
SYSTEM LOCATION 6-3
SYSTEM DIAGRAM 6-4
STARTER MOTOR 6-5
STARTER RELAY SWITCH 6-7

SERVICE INFORMATION

GENERAL

NOTICE

If the current is kept flowing through the starter motor to turn it while the engine is not cranking over, the starter motor may be damaged.

- The starter motor can be serviced with the engine installed in the frame.
- Always turn the ignition switch OFF before servicing the starter motor. The motor could suddenly start, causing serious injury.
- A weak battery may be unable to turn the starter motor quickly enough, or supply adequate ignition current.
- Refer to the following components information:
  - Honda SMART Key SYSTEM (page 22-2)
  - Engine stop switch/starter switch (page 21-17)
  - Main relay/starter relay (page 21-22)

TROUBLESHOOTING

Make sure that the ECM and TCM have no DTC.

Unusual condition		Probable cause (Check in numerical order)
Starter motor	Starter motor does not turn	1. Weak battery 2. Faulty starter motor or its related circuits 3. Faulty engine stop switch/starter switch or its related circuits 4. Faulty starter relay switch or its related circuits 5. Faulty starter relay or its related circuits 6. Loose or poor contact on related connectors or cable terminals 7. Faulty ECM
	Starter motor turns slowly	1. Low battery voltage 2. Poorly connected battery terminals 3. Poorly connected battery negative (–) cable 4. Poorly connected starter motor cable 5. Faulty starter motor
	Starter motor turns, but engine does not turn	1. Starter motor is running backwards – Case assembled improperly – Terminals connected improperly 2. Faulty starter clutch 3. Damaged or faulty starter idle gear and/or reduction gear
	Starter relay switch "Clicks", but engine does not turn over	1. Crankshaft does not turn due to engine problems

SYSTEM LOCATION

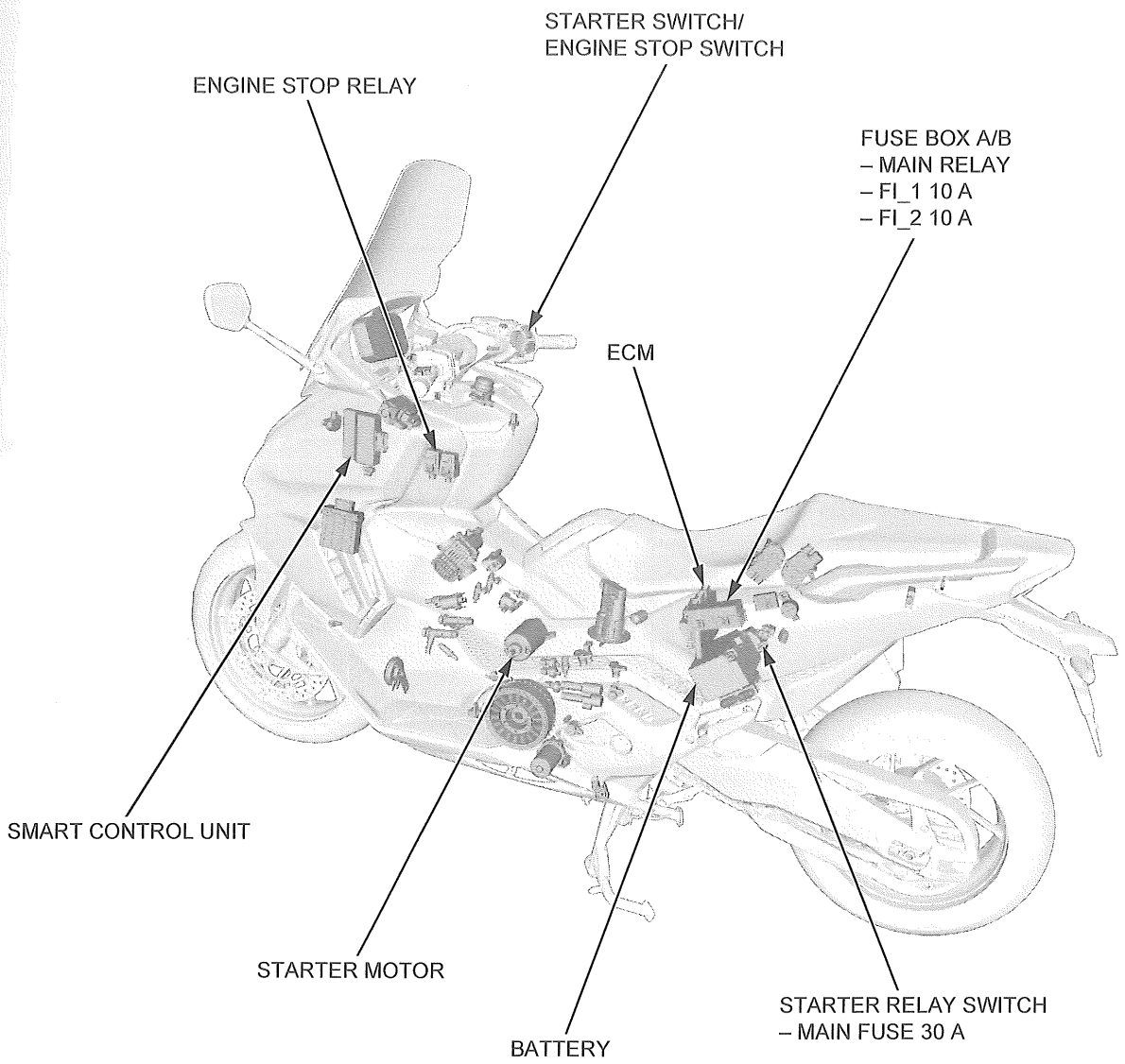

SYSTEM DIAGRAM

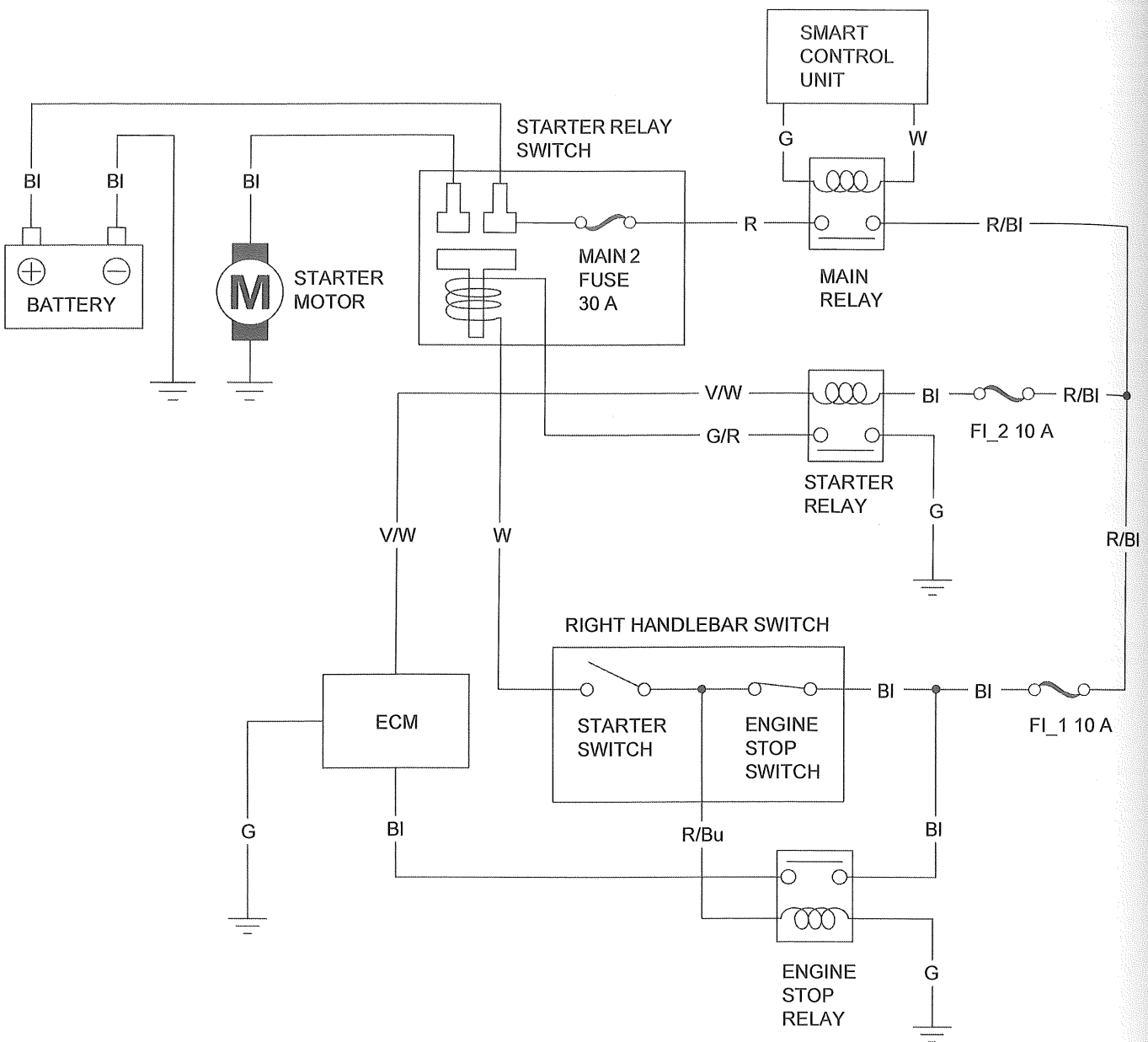

Bl: Black
G: Green
R: Red
V: Violet
W: White
Bu: Blue

STARTER MOTOR

REMOVAL/INSTALLATION

Remove the right step panel/side panel (page 2-18).

Release the rubber cap [1].

Disconnect the starter motor cable [2] by removing the starter motor terminal nut/washer [3].

Remove the stater motor mounting bolts [4] and battery negative (–) cable [5].

Remove the starter motor [6].

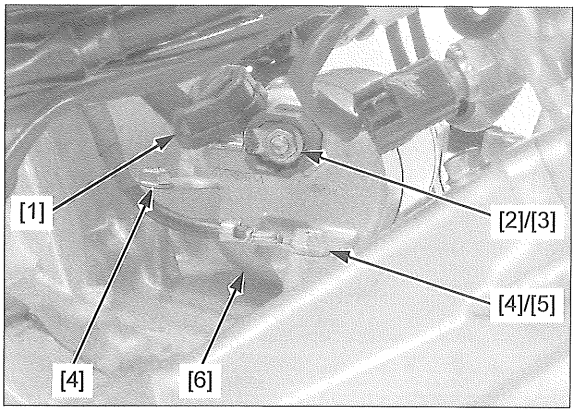

Remove the O-ring [1].

Installation is in the reverse order of removal.

NOTE:

- Always replace the O-ring with a new one.
- Apply engine oil to a new O-ring.
- Route the cables properly (page 1-20).

TORQUE:

Starter motor terminal nut/washer:
10 N·m (1.0 kgf·m, 7 lbf·ft)

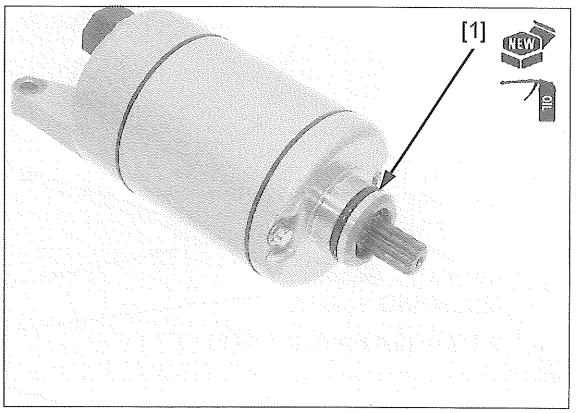

DISASSEMBLY/ASSEMBLY

NOTICE

The coil may be damaged if the magnet pulls the armature against the motor case.

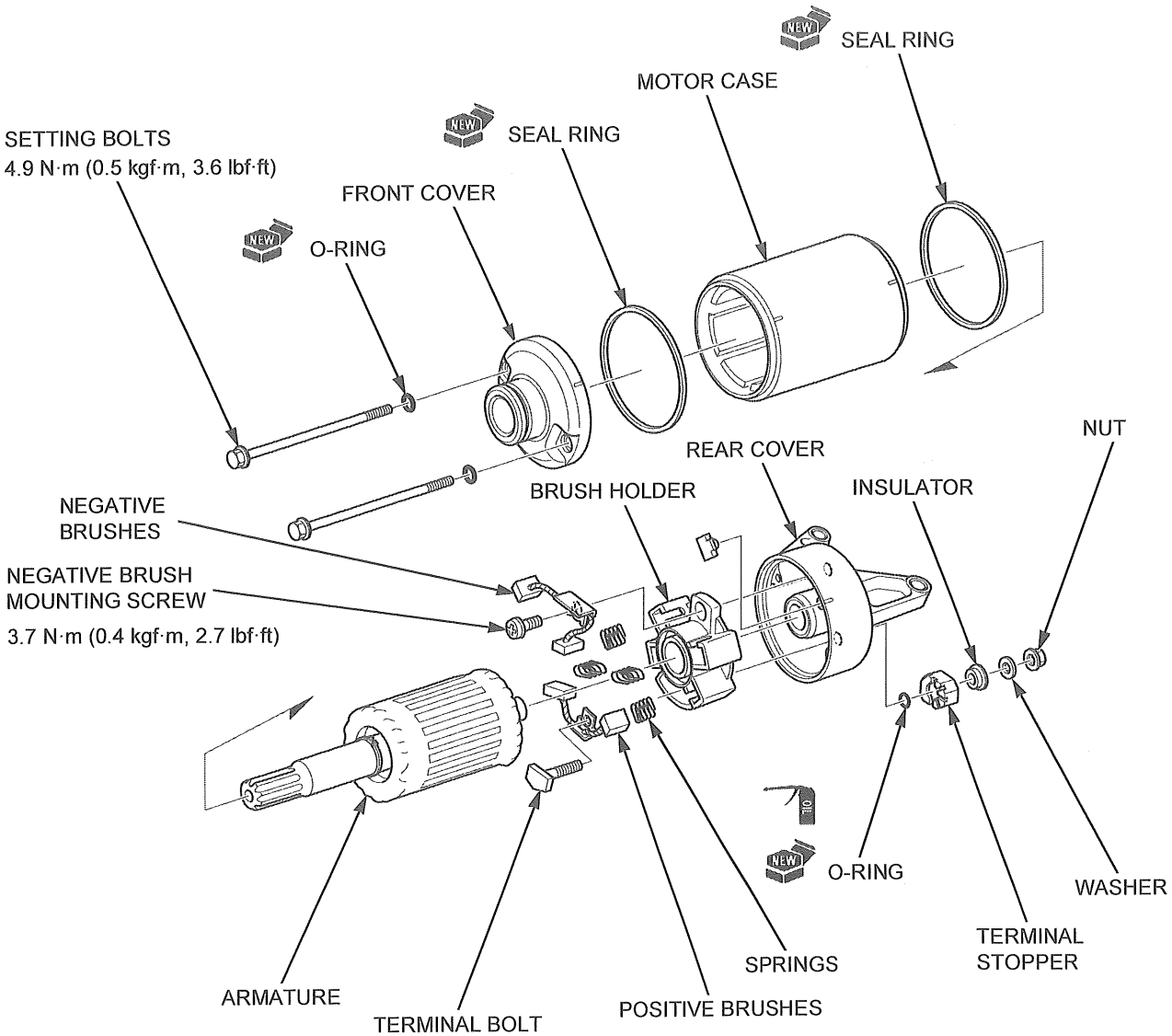

INSPECTION

FRONT COVER

Check the oil seal [1] in the front cover for deterioration, wear, or damage.

Turn the inner race of bearing [2] in the front cover with your finger.

The bearings should turn smoothly and quietly.

Also check that the outer race fits tightly in the front cover.

Replace the starter motor as an assembly if necessary.

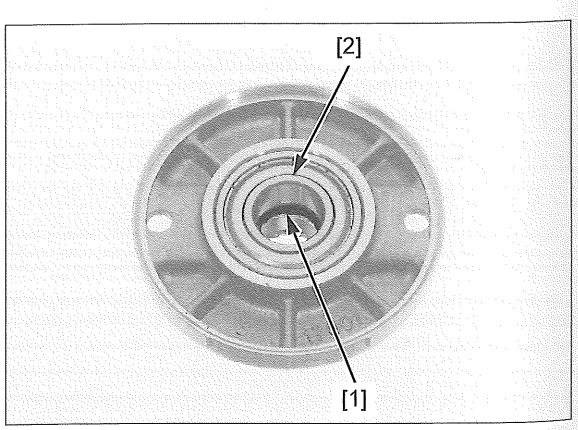

REAR COVER

Check for continuity or no continuity for each part of rear cover [1] as below:

- Between the positive brush [2] and cable terminal [3]: should be continuity.
- Between the cable terminal and the rear cover: should be no continuity.
- Between the positive brush and rear cover: should be no continuity.
- Between positive brush and negative brush [4]: should be no continuity.

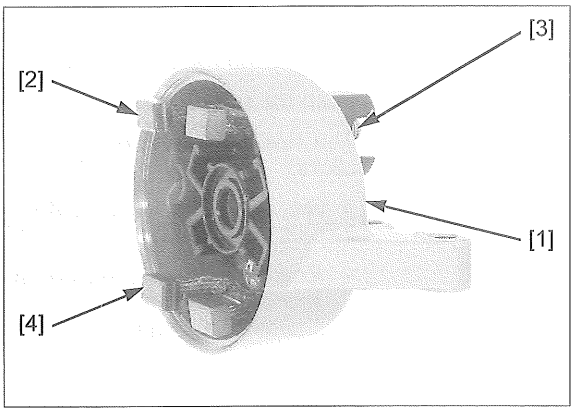

ARMATURE

Clean the metallic debris off the commutator bars [1].

Check the commutator bars for discoloration.

Check for continuity on the armature as below:

- Between pair of commutator bars: should be continuity.
- Between each commutator bar and the armature shaft [2]: should be no continuity.

Replace the starter motor as an assembly if necessary.

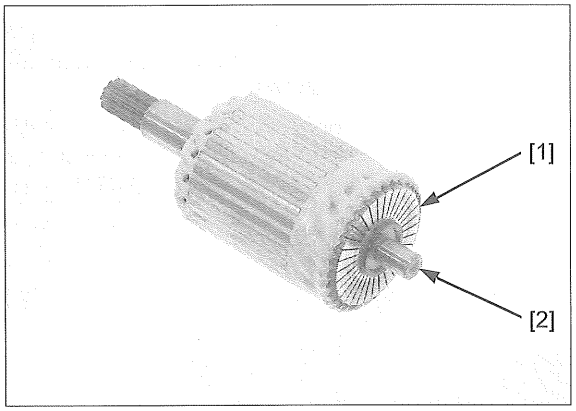

STARTER RELAY SWITCH

REMOVAL/INSTALLATION

Disconnect the battery negative (–) cable (page 20-5).

Release the DLC [1].

Remove the terminal cover [2].

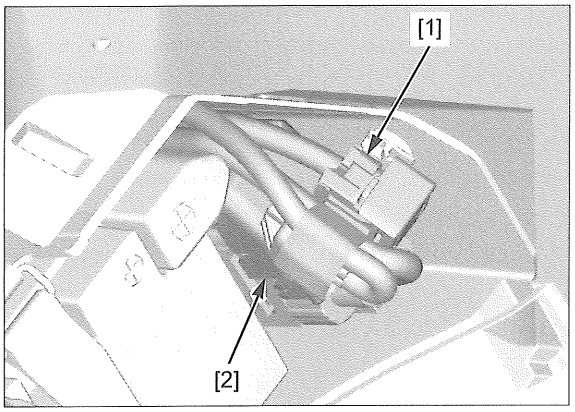

Remove the socket bolts [1] and cables [2].

Disconnect the starter relay switch 4P (Black) connector [3].

Remove the starter relay switch [4].

Installation is in the reverse order of removal.

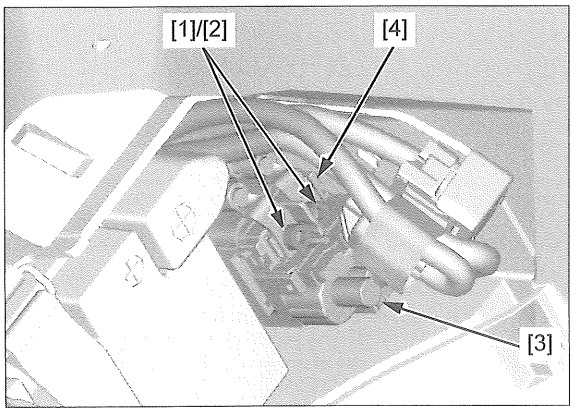

TORQUE:

Starter relay switch socket bolt:
5.1 N·m (0.5 kgf·m, 3.8 lbf·ft)

INSPECTION

Remove the maintenance lid (page 20-5).

Turn the ignition switch ON.

Push the starter switch.

The relay coil is normal if the starter relay switch [1] clicks.

If you don't hear the starter relay switch "CLICK", inspect the following:

- Engine stop switch/starter switch (page 21-17) and related circuits
- Starter relay (page 21-22) and related circuits

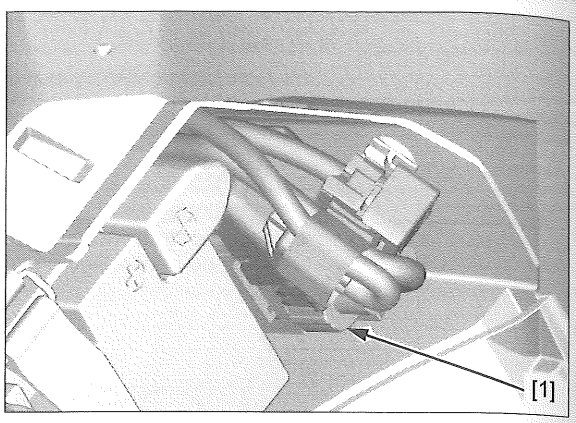

CONTINUITY INSPECTION

Remove the starter relay switch (page 6-7).

Connect a 12 V battery [1] to the starter relay switch [2] as shown.

There should be continuity between the cable terminals when the battery is connected, and no continuity when the battery is disconnected.

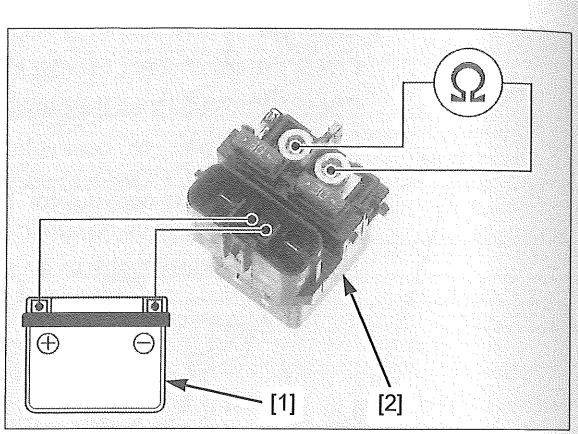

SERVICE INFORMATION 7-2
COMPONENT LOCATION 7-2
FUEL LINE INSPECTION 7-3
FUEL TANK 7-6
FUEL PUMP UNIT 7-7
AIR CLEANER HOUSING 7-11
THROTTLE BODY 7-13
FUEL INJECTOR 7-13
EVAP PURGE CONTROL SOLENOID VALVE 7-15
CANISTER 7-16

SERVICE INFORMATION

GENERAL

- Before disconnecting the fuel feed hose, relieve fuel pressure from the system (page 7-3).
- Seal the intake ports with tape or a clean cloth to keep dirt and debris from entering the engine after the throttle body or fuel rail has been removed.
- Prevent dirt and debris from entering the throttle bore and air passages after the throttle body has been removed. Clean them using a compressed air if necessary.
- The parts of the throttle body not shown in this manual should not be disassembled.
- For fuel level sensor inspection (page 21-15).

COMPONENT LOCATION

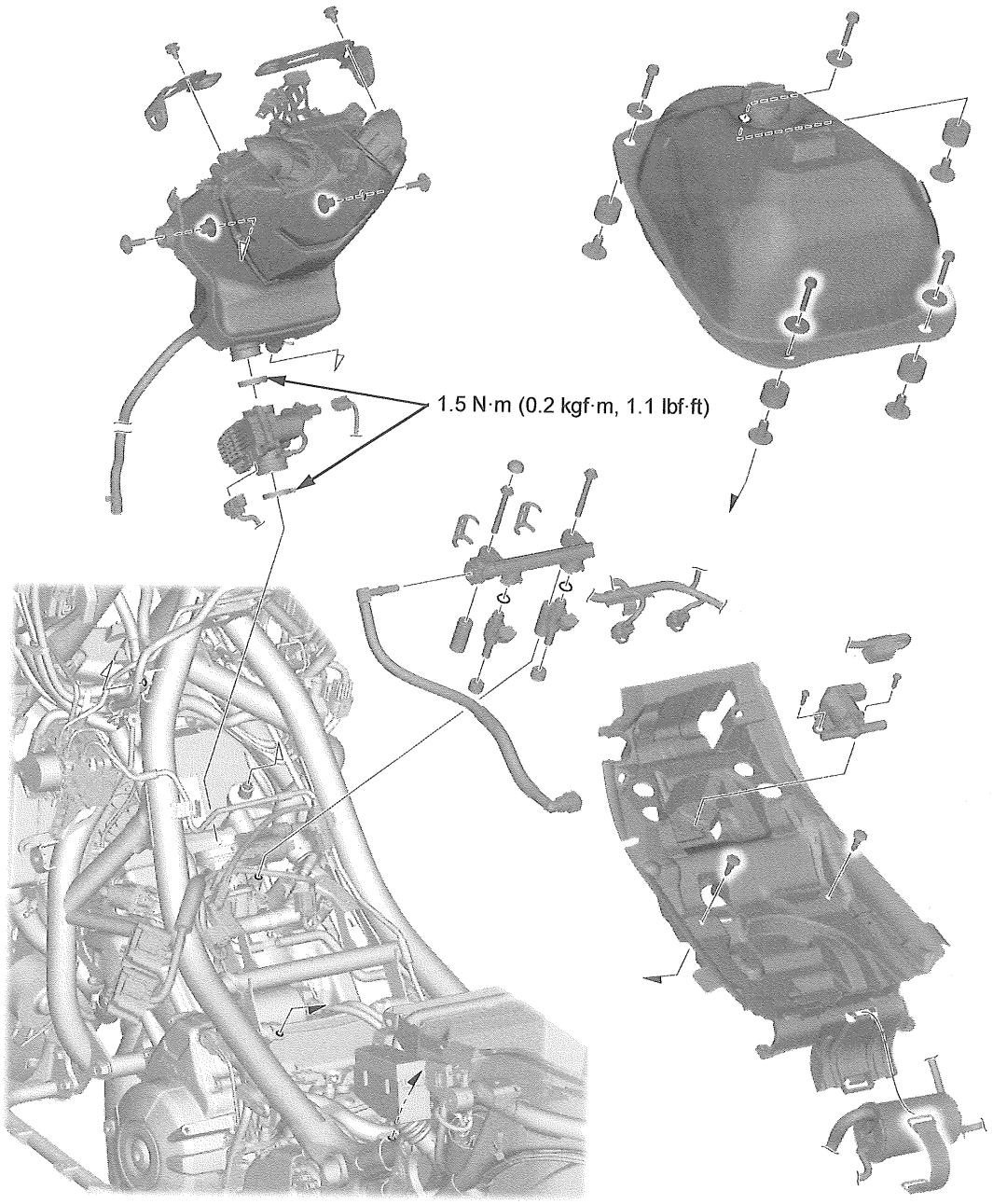

FUEL LINE INSPECTION

FUEL PRESSURE RELIEVING

NOTE:

- Before disconnecting fuel feed hose, relieve pressure from the system as follows.

1. Lift the left side of the fuel tank (page 7-6) and disconnect the fuel pump unit 5P connector.
2. Temporarily install the ignition switch.
3. Start the engine and let it idle until it stalls.
4. Turn the ignition switch OFF.

QUICK CONNECT FITTING REMOVAL/ INSTALLATION

NOTE:

- Clean around the quick connect fitting before disconnecting the fuel feed hose, and be sure that no dirt is allowed to enter into the fuel system.
- Do not bend or twist the fuel feed hose.

Relieve the fuel pressure (page 7-3).

Disconnect the battery negative (–) cable (page 20-5).

Push the tab [1] and press down the retainer [2].

Fuel pump unit side: Disconnect the fuel feed hose connector [3] from the fuel pump joint.

Fuel rail side: Disconnect the fuel feed hose joint from the fuel rail connector.

NOTE:

- To prevent damage and keep foreign matter out, cover the disconnected connector and pipe end with the plastic bags [3].

Fuel pump unit side: Press the fuel feed hose connector onto the fuel pump joint until the retainer locks with a "CLICK".

Fuel rail side: Press the fuel feed hose joint into the fuel rail connector until the retainer locks with a "CLICK".

NOTE:

- If it is hard to connect, put a small amount of engine oil on the joint end.

Make sure the connection is secure; check visually and by pulling the connector.

Connect the battery negative (–) cable (page 20-5).

Normalize the fuel pressure (page 7-4).

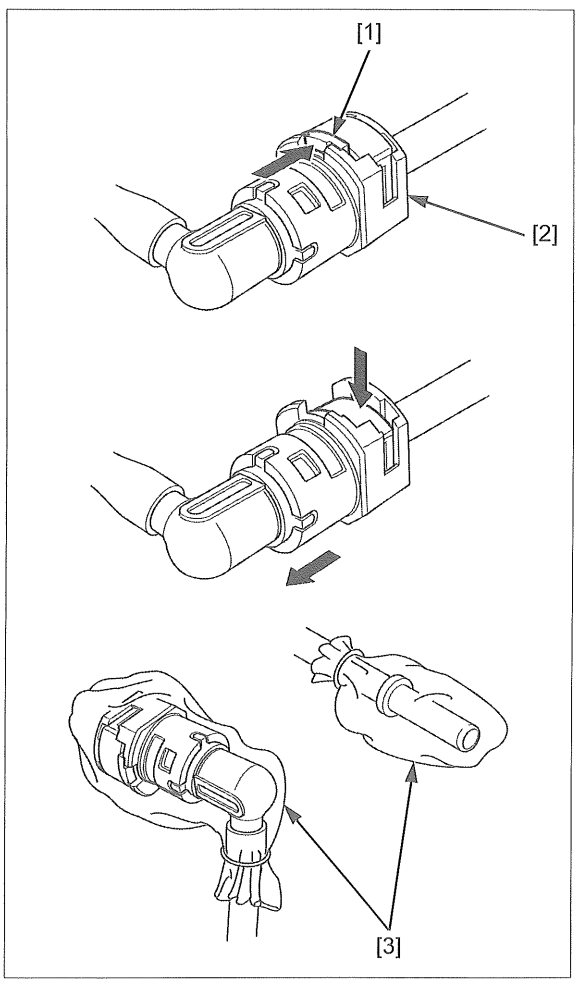

FUEL PRESSURE NORMALIZATION

1. Connect the fuel pump unit 5P (Black) connector (page 7-6).

   Connect the battery negative (–) cable (page 20-5).

2. Turn the ignition switch ON.

   The fuel pump will run for about 2 seconds and fuel pressure will rise.

NOTE:

- Do not start the engine.

3. Turn the ignition switch OFF.
4. Repeat steps 2 and 3 two or three times, and check that there is no leakage in the fuel supply system.
5. Install the fuel tank (page 7-6).

FUEL PRESSURE TEST

Relieve the fuel pressure (page 7-3).

Disconnect the quick connect fitting from the fuel pump unit (page 7-3).

Attach the fuel pressure gauge, attachments and manifold.

TOOLS:

Fuel pressure gauge [1]	**07406-0040004**
Pressure gauge attachment set [2]	**070MJ-K260100**
Hose attachment, 6 mm/9 mm [3]	**07ZAJ-S5A0130**
Hose attachment, 8 mm/9 mm [4]	**07ZAJ-S7C0100**
Attachment joint, 8 mm/9 mm [5]	**07ZAJ-S7C0200**
Attachment joint, 6 mm/9 mm [6]	**07ZAJ-S5A0150**

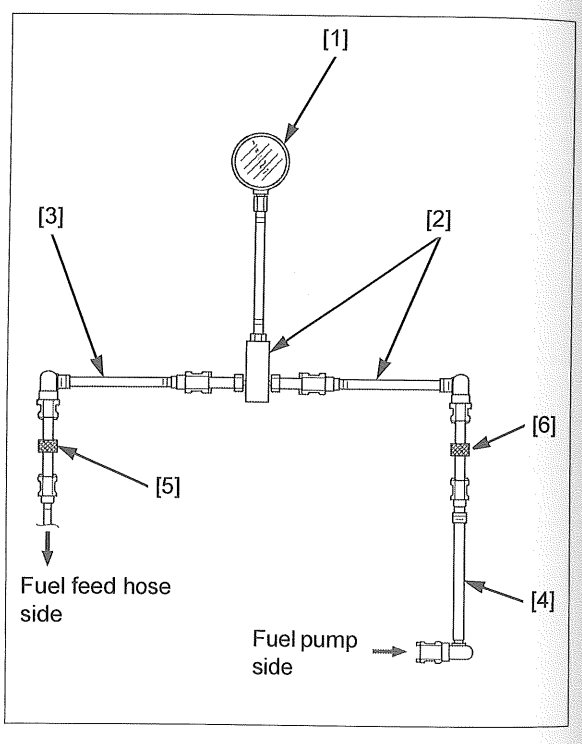

Temporarily connect the battery negative (–) cable and fuel pump unit 5P (Black) connector.

Turn the ignition switch ON.

Start the engine and let it idle.

Read the fuel pressure.

STANDARD: 343 kPa (3.5 kgf/cm², 50 psi)

If the fuel pressure is higher than specified, replace the fuel pump unit.

If the fuel pressure is lower than specified, inspect the following:

- Fuel line for leakage
- Pinched or clogged fuel tank breather hose
- Fuel pump unit (page 7-7)
- Clogged fuel filter (page 7-8)

After inspection, relieve the fuel pressure (page 7-3).

Remove the special tools.

Connect the quick connect fitting to the fuel pump unit (page 7-3).

FUEL FLOW INSPECTION

Disconnect the quick connect fitting from the fuel pump unit (page 7-3).

Connect the special tool to the fuel hose joint.

TOOL:
Hose attachment, 8 mm/9 mm [1] 07ZAJ-S7C0100

Place the end of the hose attachment into an approved fuel container.

NOTE:
- Clean up any spilled fuel.

Temporarily connect the battery negative (–) cable and fuel pump unit 5P (Black) connector.

Turn the ignition switch ON.

Measure the amount of fuel flow.

NOTE:
- The fuel pump operates for 2 seconds. Repeat 5 times to measure the amount of fuel.
- Return fuel to the fuel tank.

Amount of fuel flow:
319 cm^3 (10.8 US oz, 11.2 Imp oz) minimum/ 10 seconds at 12 V

If fuel flow is less than specified amount, inspect the following:

– Pinched or clogged fuel tank breather hose
– Fuel pump unit (page 7-7)
– Clogged fuel filter (page 7-8)

Remove the special tool.

Connect the quick connect fitting to the fuel pump unit (page 7-3).

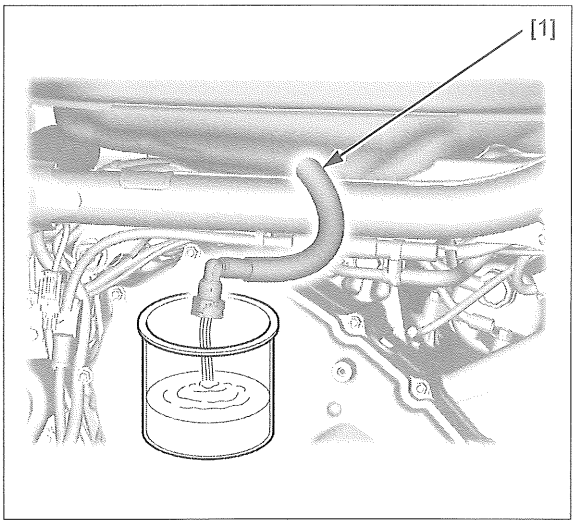

FUEL TANK

REMOVAL/INSTALLATION

Remove the fuel lid bracket (page 2-22).

Relieve the fuel pressure (page 7-3).

Remove the fuel tank mounting bolts [1], washers [2], collars [3] and grommets [4].

Lift up the fuel tank [5].

Disconnect the quick connect fitting [6] from the fuel pump unit (page 7-3).

Disconnect the fuel pump unit 5P (Black) connector [7].

Installation is in the reverse order of removal.

NOTE:

- After installing the quick connect fittings, normalize the fuel pressure (page 7-4).

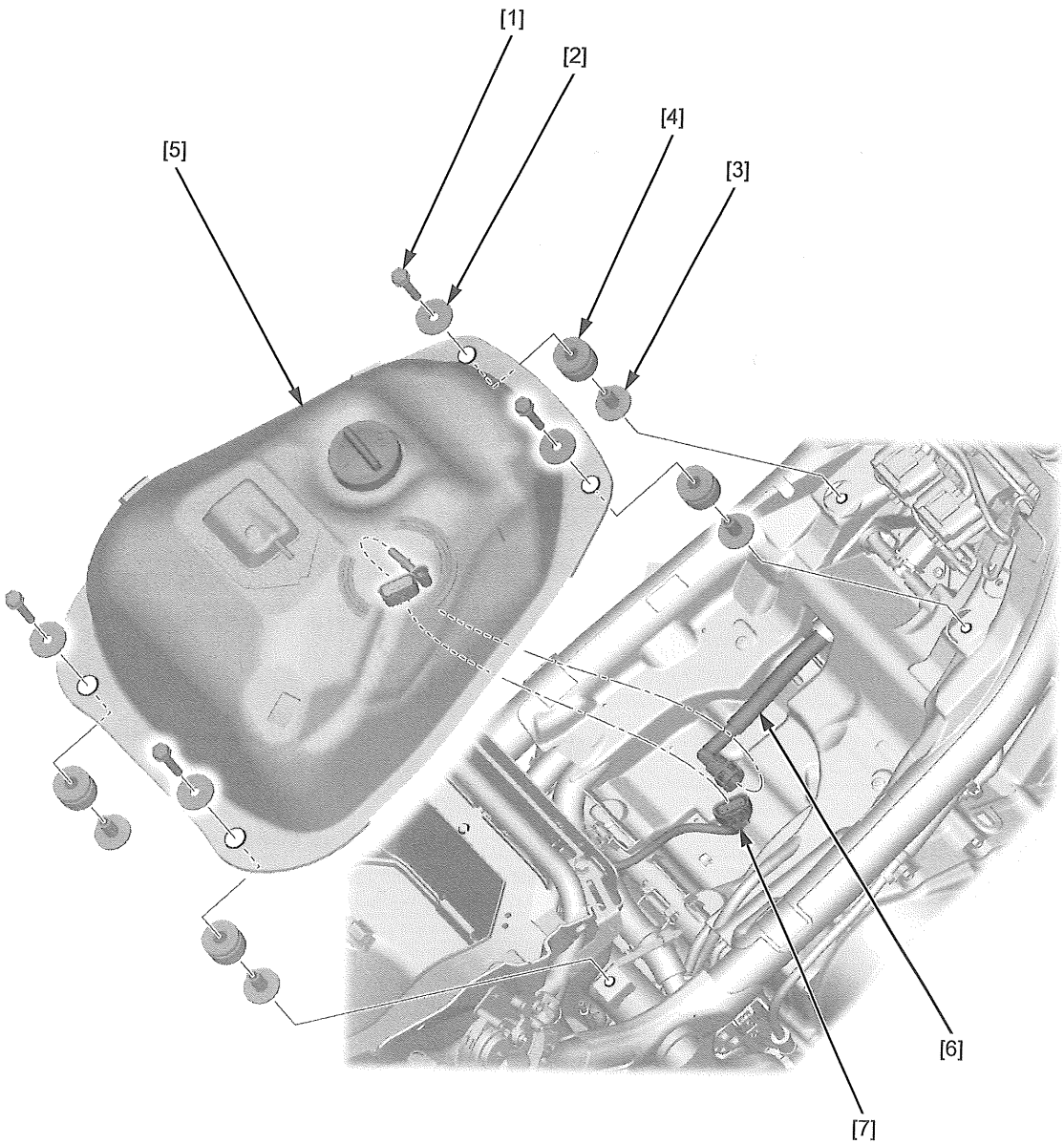

FUEL PUMP UNIT

INSPECTION

Turn the ignition switch ON and confirm that the fuel pump operates for a few seconds.

If the fuel pump does not operate, inspect as follows:

Turn the ignition switch OFF.

Disconnect the fuel pump unit 5P (Black) connector (page 7-6).

Turn the ignition switch ON.

Measure the voltage between the fuel pump unit 5P (Black) connector [1] terminals.

CONNECTION: Brown (+) – Green (–)

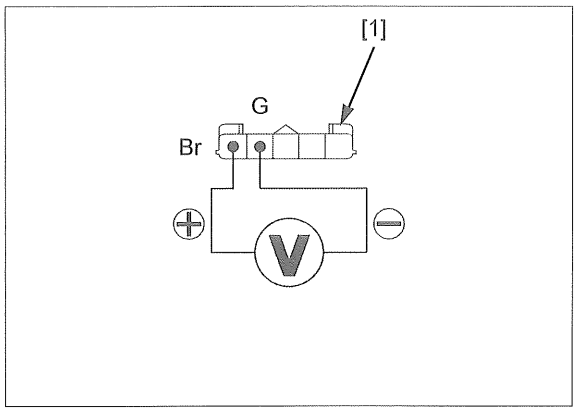

There should be battery voltage for a few seconds.

If there is battery voltage for a few seconds, replace the fuel pump unit.

If there is no battery voltage, inspect the following:

- FI 2 fuse (10 A)
- Fuel pump relay (page 21-22)
- Fuel pump relay related circuit
- Open circuit in the Brown or Green wire
- ECM power/ground line (page 4-56)

REMOVAL

Remove the fuel tank (page 7-6).

Clean around the fuel pump unit.

Loosen the fuel pump unit mounting nuts [1] in a crisscross pattern in 2 or 3 steps and remove them.

Remove the set plate [2] and fuel pump unit [3].

NOTE:

- Be careful not to damage the fuel level sensor float arm.

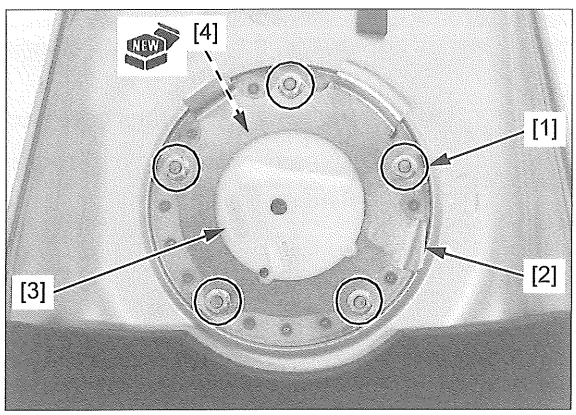

Remove the dust seal [1] and fuel pump gasket [2] from the fuel pump unit.

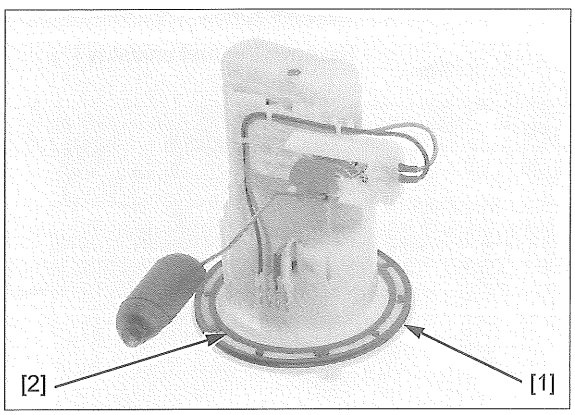

DISASSEMBLY

Disconnect the following:

- Black wire connector [1]
- Red wire connector [2]
- Green wire connector [3]
- Yellow wire connector [4]

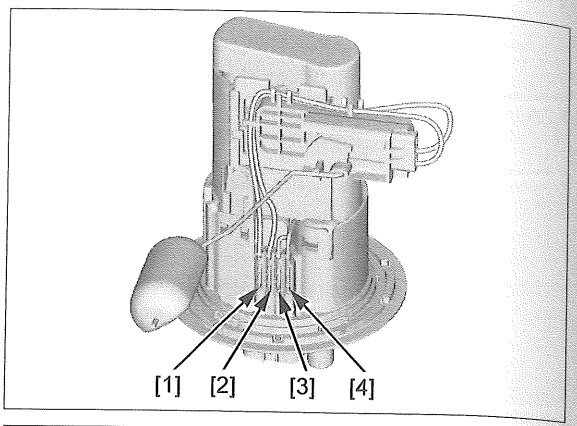

Remove the fuel filter assembly [1] from the flange [2] by releasing the tabs [3].

Remove the O-ring [4].

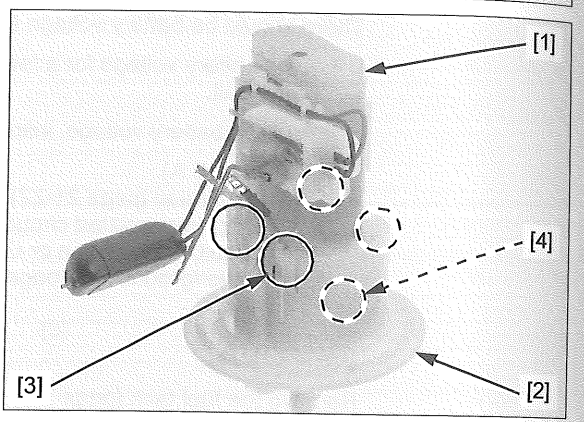

Visually inspect the suction filter [1] for dirt, debris, or clogging.

Replace the fuel pump unit if necessary.

Remove the fuel pump [2] and pressure regulator [3].

Remove the O-ring [4] from the fuel pump.

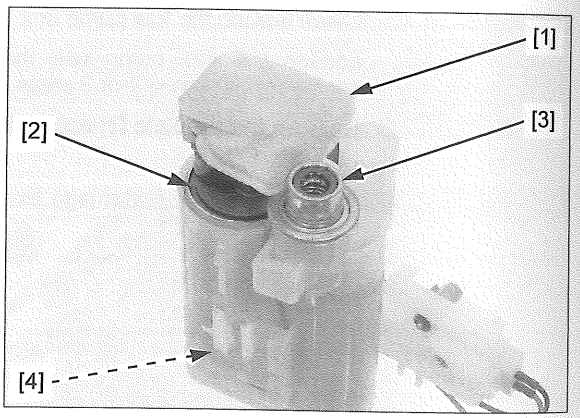

Remove the fuel unit/stay [1].

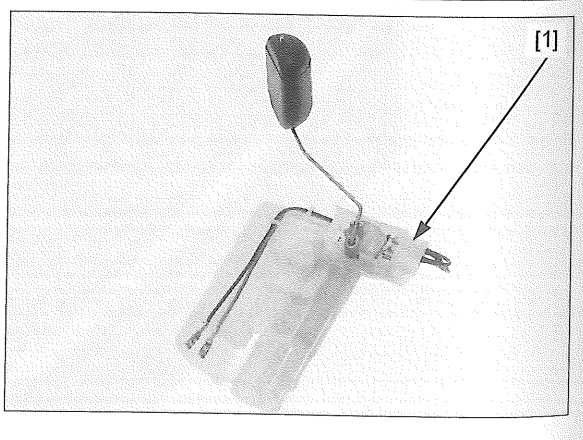

ASSEMBLY

Install the fuel unit/stay [1] onto a new fuel filter [2].

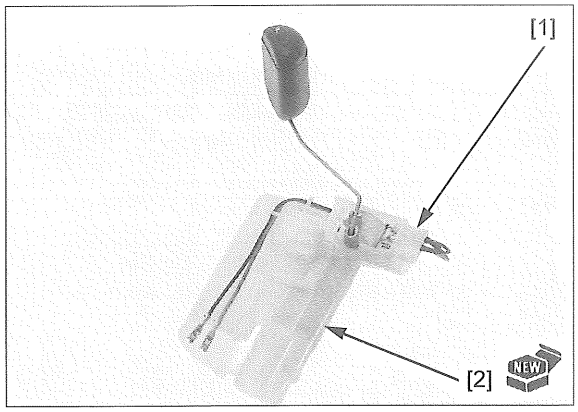

Install a new pressure regulator (with O-ring) [1] into the fuel filter.

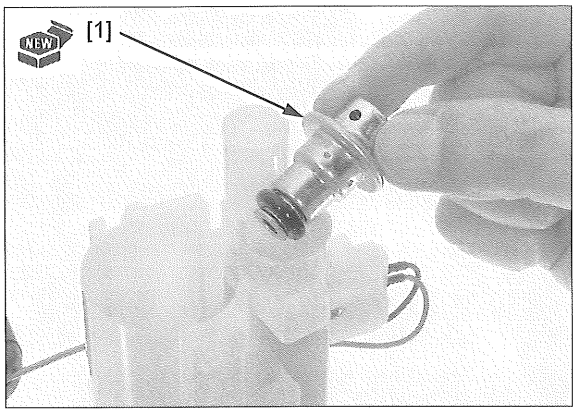

Install a new O-ring [1] onto the fuel pump [2].

Install the fuel pump into the fuel filter.

NOTE:

- Route the green wire [3] as shown.

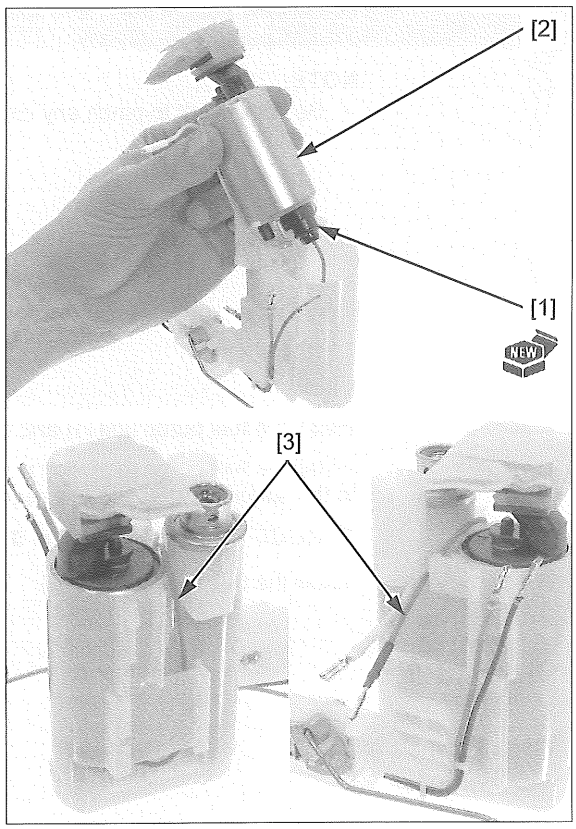

Install a new O-ring [1] onto the flange [2].

Install the fuel filter assembly [3] into the flange.

Make sure that the tabs of the fuel filter are set into the slots in the flange.

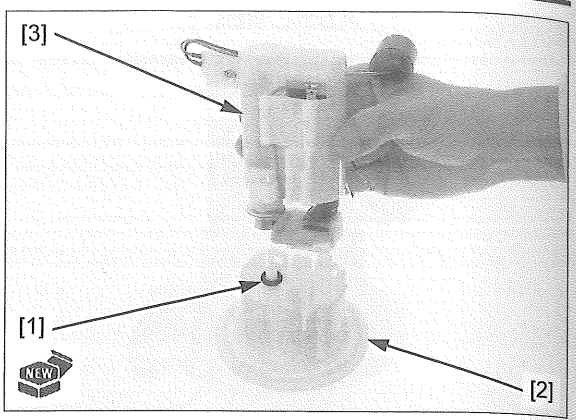

Connect the following:

- Black wire connector [1]
- Red wire connector [2]
- Green wire connector [3]
- Yellow wire connector [4]

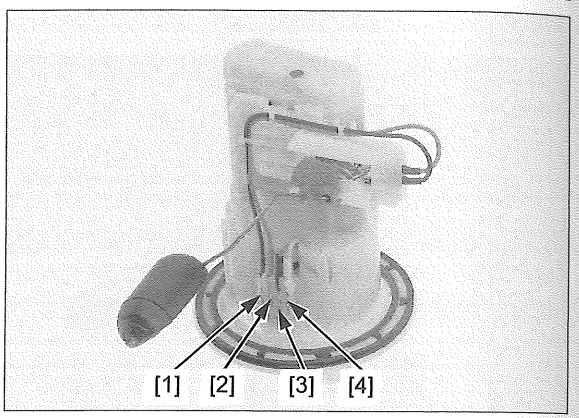

INSTALLATION

Install new dust seal [1] and fuel pump gasket [2] into the fuel pump unit properly.

NOTE:

- Be careful not to pinch any dirt or debris.

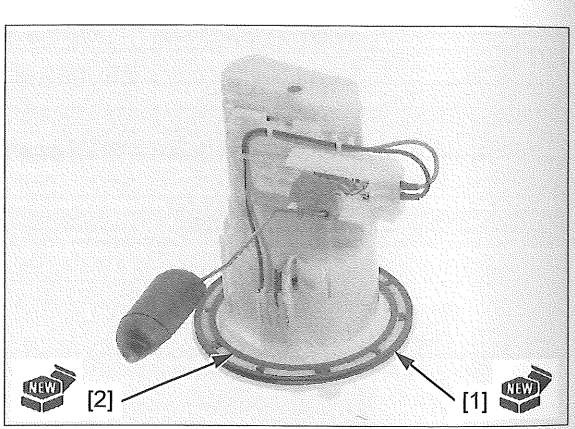

Install the fuel pump unit [1] and set plate [2] as shown.

Install the fuel pump mounting nuts [3] and tighten them to the specified torque in the sequence as shown.

TORQUE: 12 N·m (1.2 kgf·m, 9 lbf·ft)

Install the fuel tank (page 7-6).

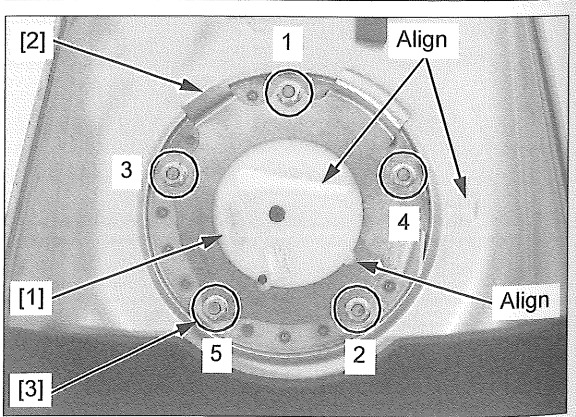

AIR CLEANER HOUSING

REMOVAL/INSTALLATION

Remove the center lower cover (page 2-21).

Pull down the radiator (page 8-7).

Release the wire clamp [1].

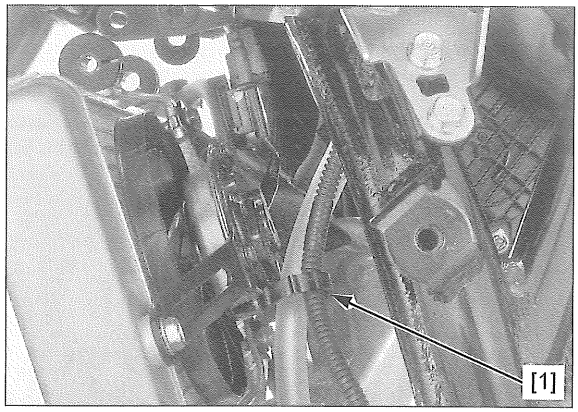

Loosen the air cleaner connecting hose band screw [1].

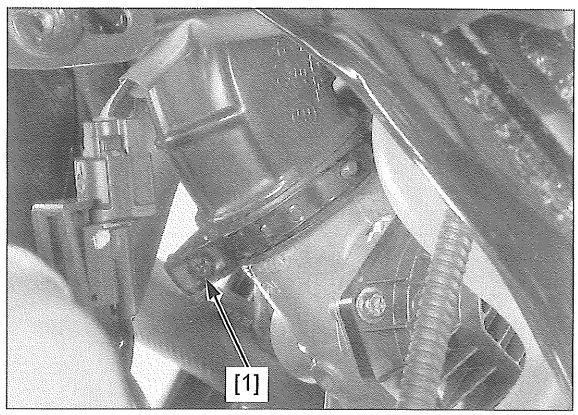

Disconnect the IAT sensor 2P (Black) connector [1] and crankcase breather hose [2].

Remove the following:

- Clips [3]
- Wire clips [4]
- Stays [5]
- Ignition switch 4P (Black) connector [6]
- Seat open switch/fuel lid open switch 4P (Black) connector [7]
- Bolts [8]
- Collars [9]
- Air cleaner housing [10]
- Hose band [11]

Installation is in the reverse order of removal.

TORQUE:

Air cleaner connecting hose band screw:
1.5 N·m (0.2 kgf·m, 1.1 lbf·ft)

NOTE:

- Install the air cleaner connecting hose as shown.
- Route the hoses and wires properly (page 1-20).

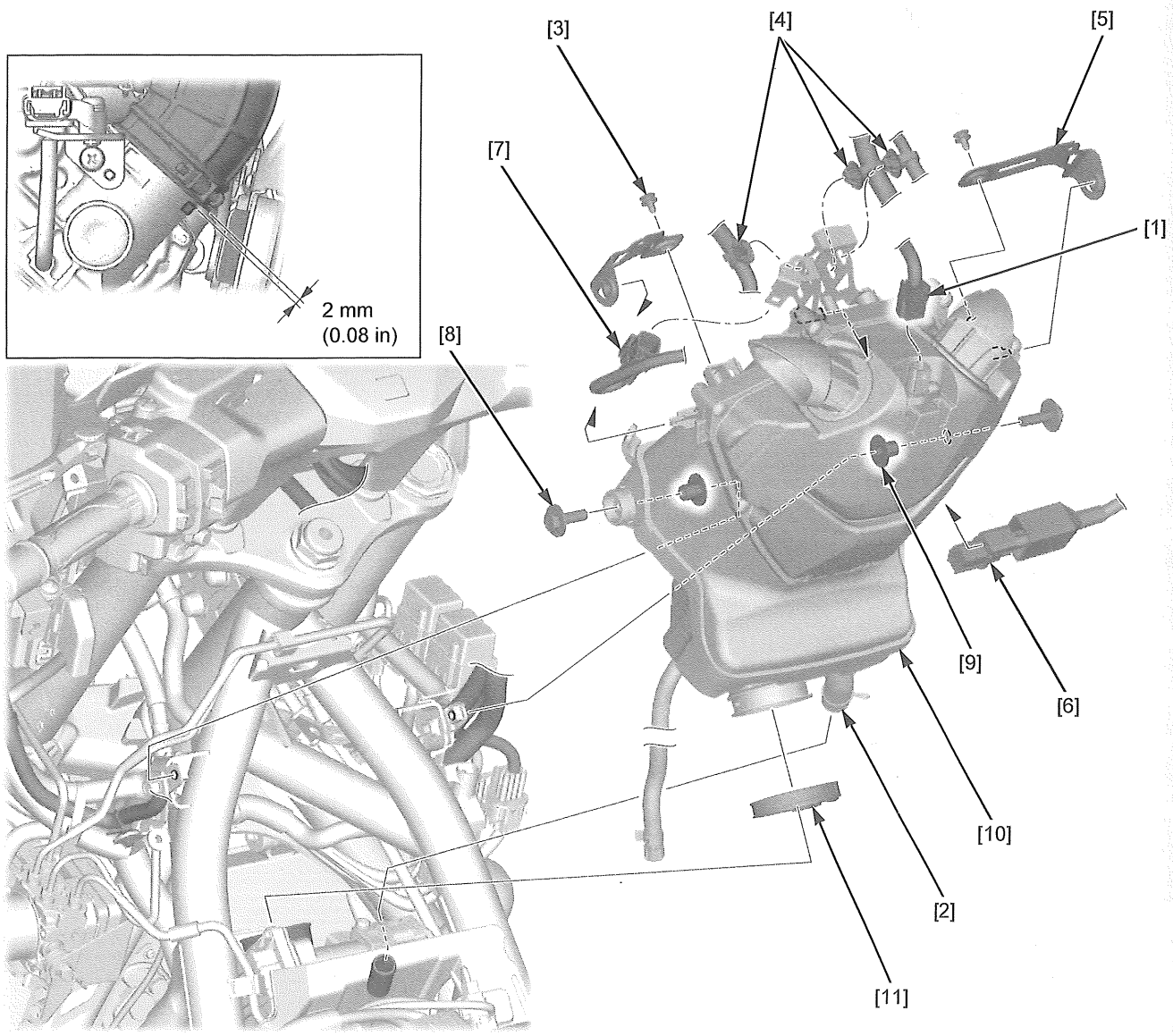

THROTTLE BODY

REMOVAL/INSTALLATION

Remove the following:

- Heat guard (page 2-24)
- Air cleaner housing (page 7-11)
- MAP sensor (page 4-57)

Disconnect the TBW 6P (Black) connector [1].

Loosen the insulator band screw [2] and remove the throttle body [3].

NOTICE

- *Do not disassemble the throttle body.*

Installation is in the reverse order of removal.

NOTE:

- Align the throttle body locating boss with the insulator groove.
- Tighten the insulator band screw to the specified range as shown.

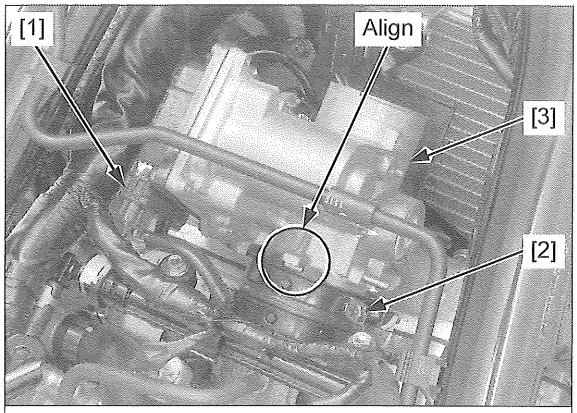

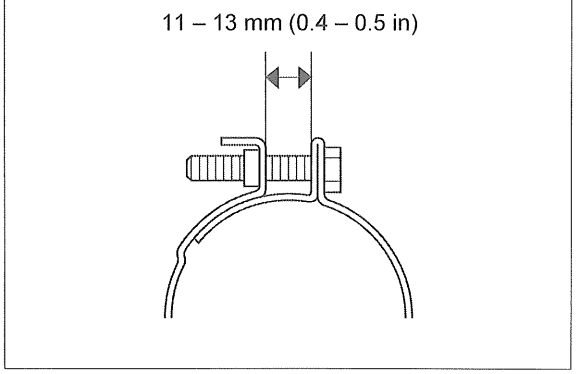

FUEL INJECTOR

REMOVAL

Remove the heat guard (page 2-24).

Disconnect the fuel injector 2P (Gray) connectors [1].

Remove the clip [2] from the fuel rail.

Remove the following:

- Bolts [3]
- Collars [4]
- Fuel injector assembly [5]

Disconnect the fuel feed hose [6] from the fuel rail (page 7-3).

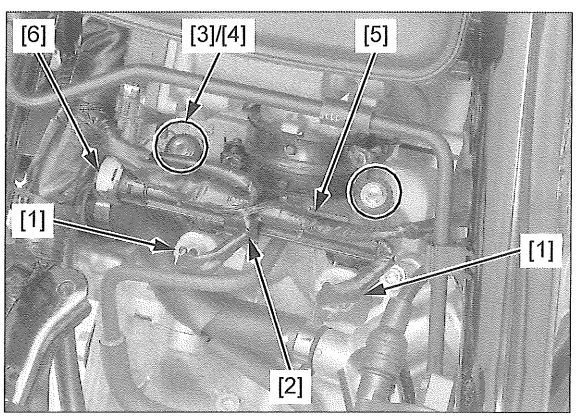

Remove the retainers [1] and injectors [2] from the fuel rail [3].

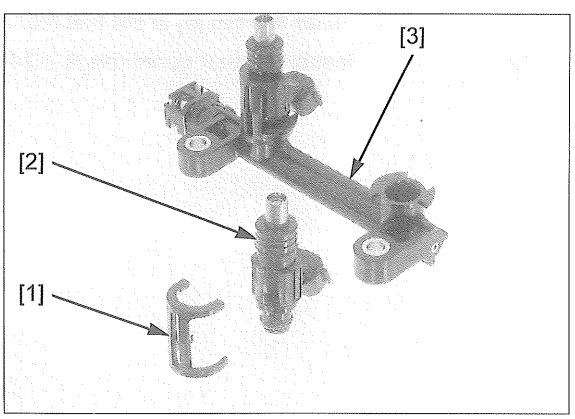

Remove the O-ring [1] and seal ring [2] from the fuel injector [3].

Check the removed parts for wear or damage and replace them if necessary.

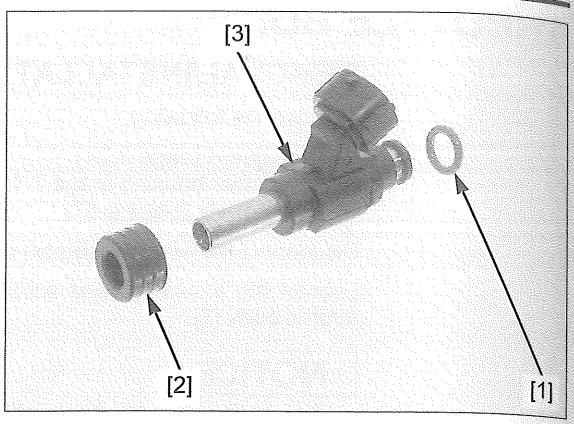

INSTALLATION

Apply engine oil to a new O-ring and a new seal ring.

Install the O-ring [1] and seal ring [2] to the fuel injector [3], being careful not to damage them.

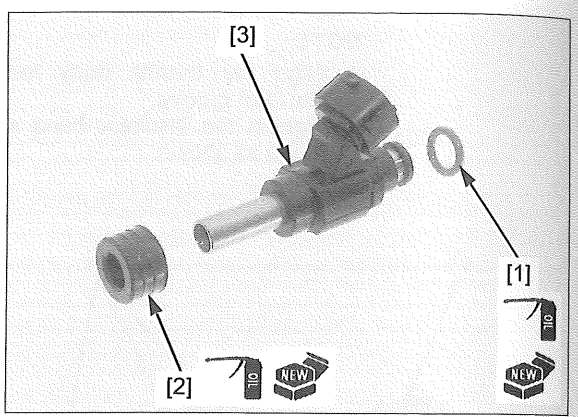

Install the fuel injectors [1] to the fuel rail [2], being careful not to damage the O-rings.

Install the retainers [3].

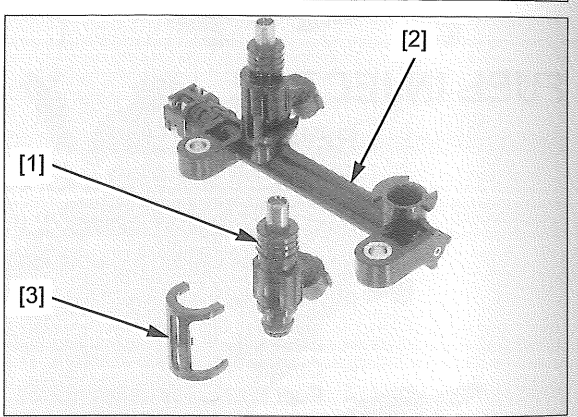

Connect the fuel feed hose [1] to the fuel rail (page 7-3).

Install the fuel injector assembly [2] and collars [3].

Install and tighten the bolts [4] securely.

Connect the fuel injector 2P (Gray) connectors [5].

Install the clip [6] to the fuel rail.

Install the heat guard (page 2-24).

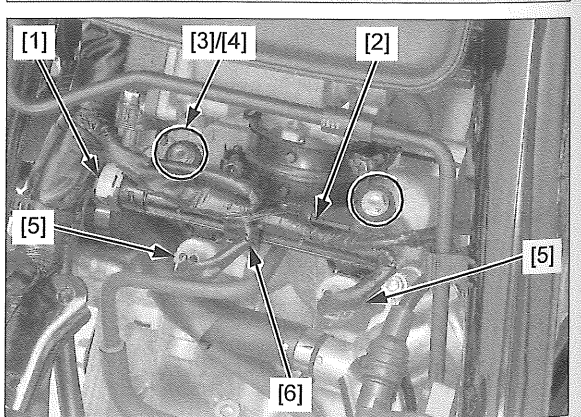

EVAP PURGE CONTROL SOLENOID VALVE

REMOVAL/INSTALLATION

Remove the fuel tank (page 7-6).

Disconnect the EVAP purge control solenoid valve 2P (Black) connector [1].

Disconnect the vacuum hose [2] and canister-to-EVAP purge control solenoid valve hose [3] from the EVAP purge control solenoid valve [4].

Remove the screws [5] and EVAP purge control solenoid valve.

Installation is in the reverse order of removal.

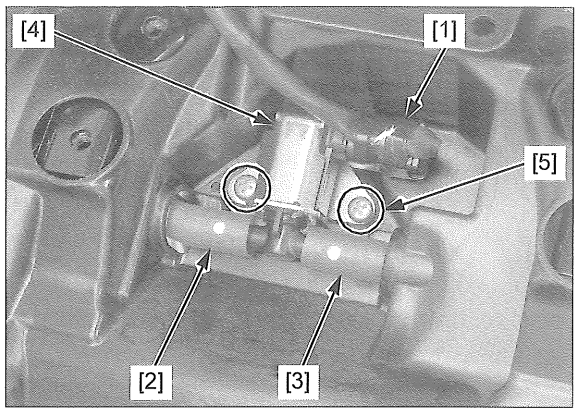

EVAP PURGE CONTROL SOLENOID VALVE INSPECTION

Remove the EVAP purge control solenoid valve (page 7-15).

Check the air flow from hose fitting A (input port) to hose fitting B (output port) of the EVAP purge control solenoid valve [1].

Air should not flow.

Connect a 12 V battery [2] to the solenoid valve 2P (Black) connector [3] terminals as shown.

Air should flow out when the battery is connected.

Replace the solenoid valve if it does not operate properly.

Install the EVAP purge control solenoid valve (page 7-15).

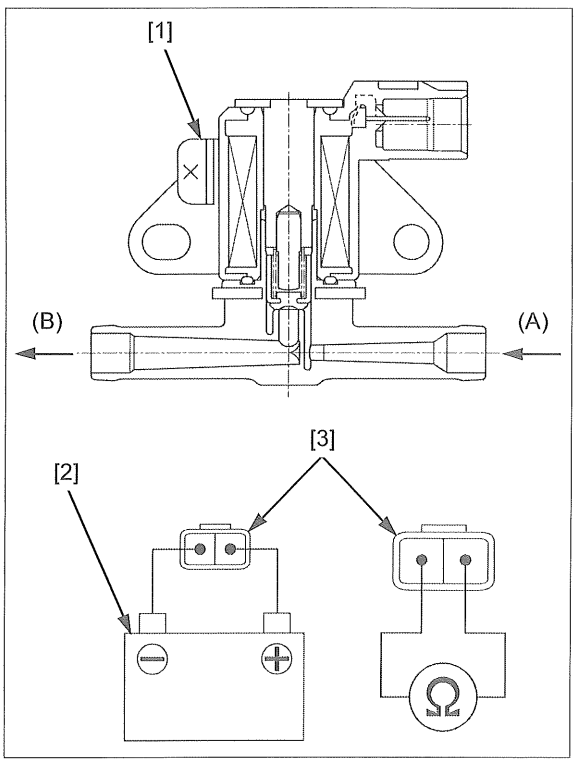

CANISTER

REMOVAL/INSTALLATION

Remove the fuel tank (page 7-6).

Remove the shock absorber (page 17-10).

Remove the band [1] and canister [2] from the heat guard.

Disconnect the following:

- Open air hose [3]
- EVAP canister drain hose [4]
- Fuel tank breather hose [5]
- Canister-to-evap purge control solenoid valve hose [6]

Installation is in the reverse order of removal.

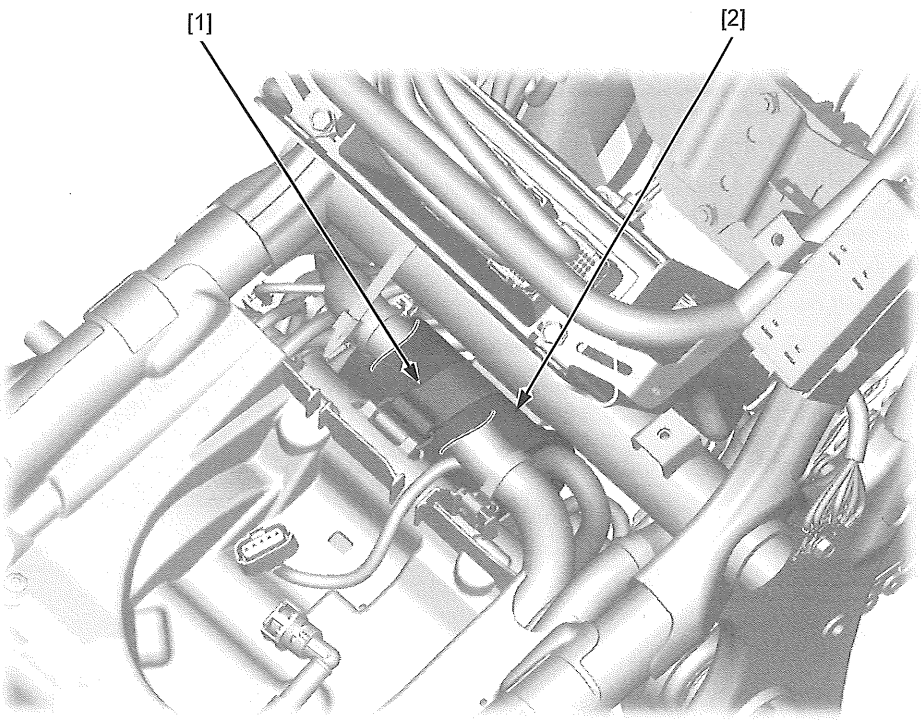

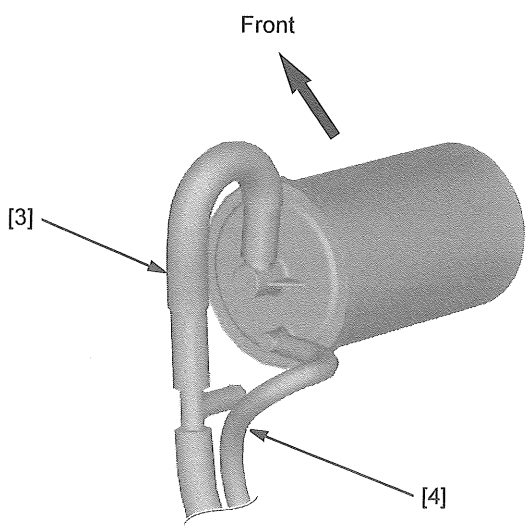

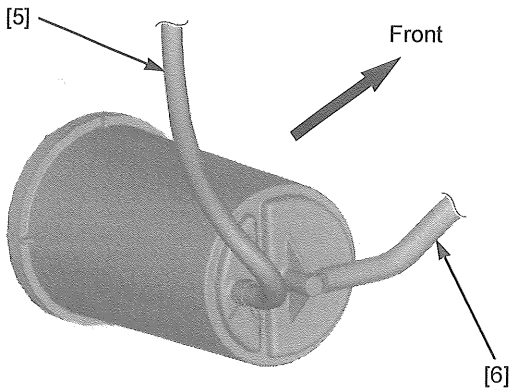

SERVICE INFORMATION 8-2

TROUBLESHOOTING 8-2

SYSTEM FLOW PATTERN 8-3

SYSTEM TESTING 8-4

COOLANT REPLACEMENT 8-4

THERMOSTAT/THERMOSTAT HOUSING 8-5

RADIATOR 8-7

WATER PUMP 8-10

RADIATOR RESERVE TANK 8-12

SERVICE INFORMATION

GENERAL

⚠WARNING

Removing the radiator cap while the engine is hot can allow the coolant to spray out, seriously scalding you.
Always let the engine and radiator cool down before removing the radiator cap.

NOTICE

- *Using coolant with silicate corrosion inhibitors may cause premature wear of water pump seals or blockage of radiator passages. Using tap water may cause engine damage.*
- Add coolant at the reserve tank. Do not remove the radiator cap except to refill or drain the system.
- All cooling system services can be done with the engine installed in the frame.
- Avoid spilling coolant on painted surfaces.
- After servicing the system, check for leaks with a cooling system tester.
- For fan control relay service (page 21-22)

TROUBLESHOOTING

Engine temperature too high

- Faulty high coolant temperature indicator or ECT sensor
- Thermostat stuck closed
- Faulty radiator cap
- Insufficient coolant
- Passage blocked in radiator, hoses, or water jacket
- Air in system
- Faulty cooling fan motor
- Faulty fan control relay
- Faulty water pump

Engine temperature too low

- Faulty ECT sensor
- Thermostat stuck open
- Faulty fan control relay

Coolant leak

- Faulty water pump mechanical seal
- Deteriorated O-rings
- Faulty radiator cap
- Damaged or deteriorated cylinder head gasket
- Loose hose connection or clamp
- Damaged or deteriorated hose
- Damaged radiator

SYSTEM FLOW PATTERN

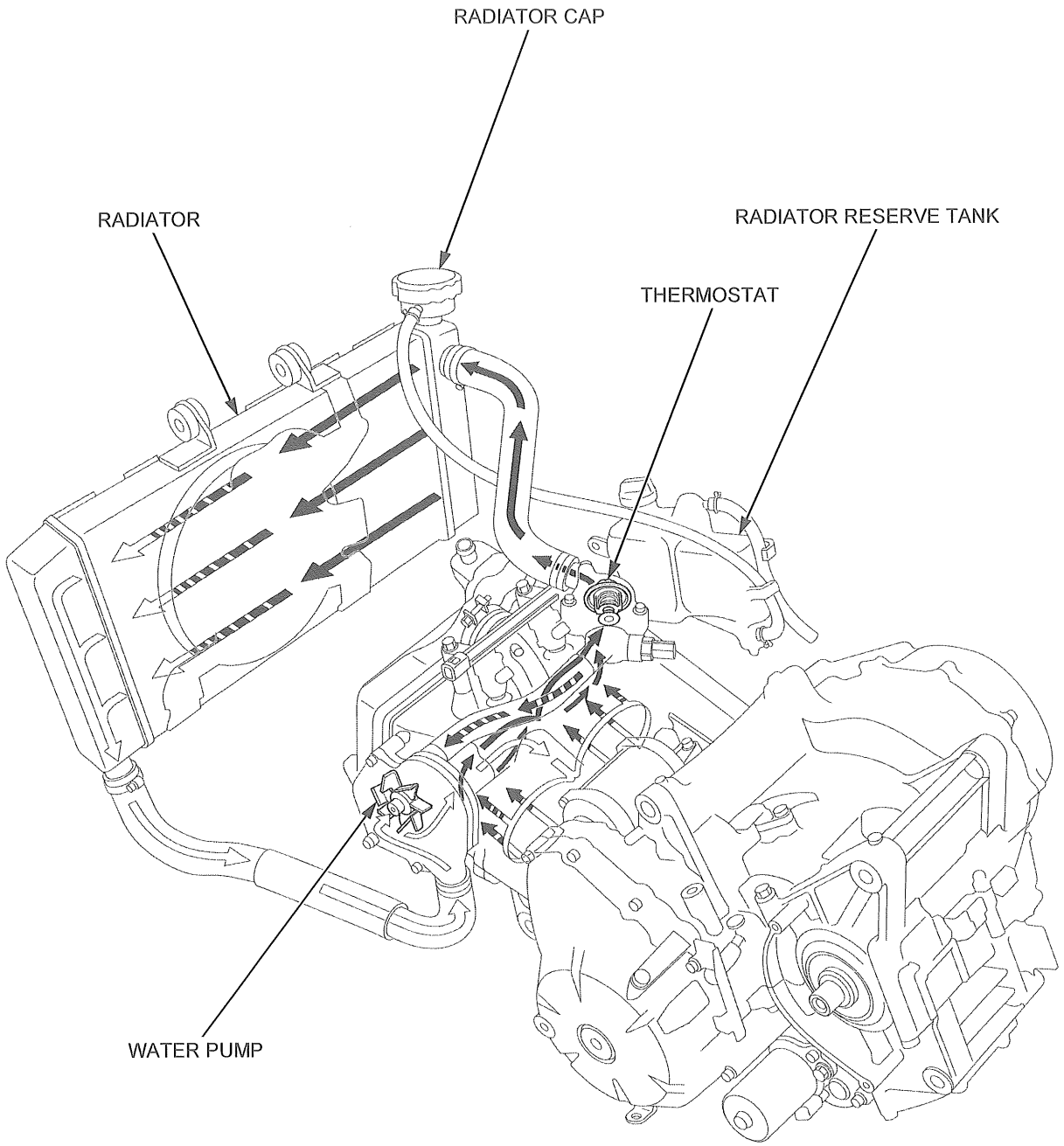

SYSTEM TESTING

RADIATOR CAP/SYSTEM PRESSURE INSPECTION

Remove the right front side cowl (page 2-15).

Remove the radiator cap [1].

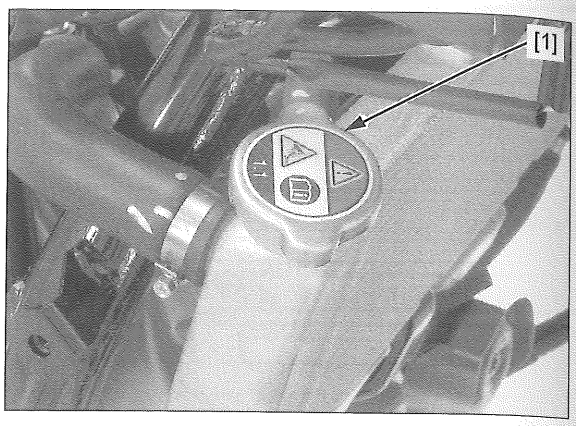

NOTE:

- Remove the radiator cap while the engine is cold.

Wet the sealing surfaces of the radiator cap [1], then install the radiator cap onto the tester [2].

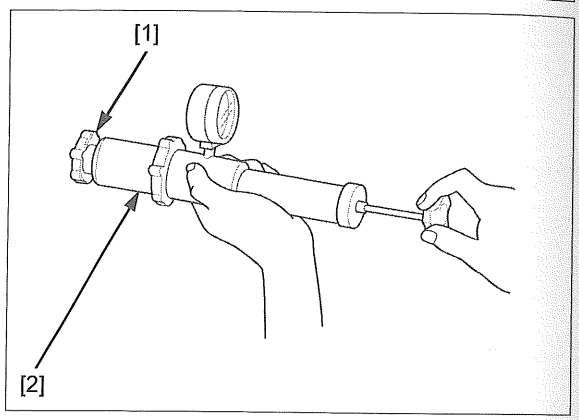

Pressure test the radiator cap.

It must hold specified pressure for at least 6 seconds.

RADIATOR CAP RELIEF PRESSURE:
108 – 137 kPa (1.1 – 1.4 kgf/cm², 16 – 20 psi)

Replace the radiator cap if it does not hold pressure, or if relief pressure is too high or too low.

Remove the radiator cap from the tester.

Install the tester to the radiator.

Apply pressure to the radiator, engine, and hoses and check for leaks.

NOTICE

Excessive pressure can damage the cooling system components. Do not exceed 137 kPa (1.4 kgf/cm², 20 psi).

Repair or replace components if the system will not hold specified pressure for at least 6 seconds.

COOLANT REPLACEMENT

REPLACEMENT/AIR BLEEDING

Remove the radiator cap (page 8-4).

Remove the drain bolt [1], sealing washer [2], and drain the coolant.

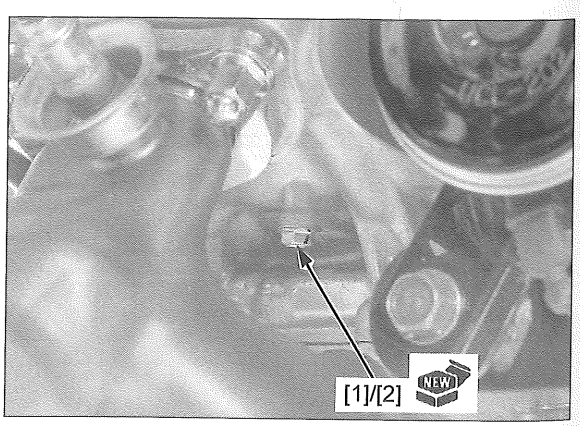

Reinstall the drain bolt with a new sealing washer.

Tighten the drain bolt securely.

Remove the radiator reserve tank (page 8-12).

Empty the coolant and rinse the inside of the reserve tank with water.

Install the radiator reserve tank (page 8-12).

Fill the system with the recommended coolant through the filler opening up to filler neck [1].

Remove the radiator reserve tank cap [2] and fill the reserve tank to the upper level line.

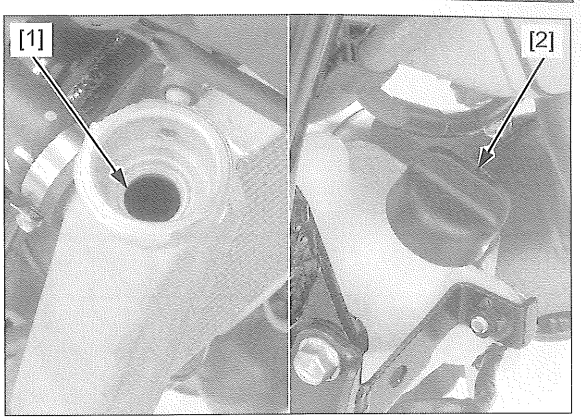

NOTE:

- When filling the system or reserve tank with coolant or checking the coolant level, place the motorcycle in an upright position on a flat, level surface.

Bleed air from the system as follows:

1. Start the engine and let it idle for 2 – 3 minutes.
2. Snap the throttle 3 or 4 times to bleed air from the system.
3. Stop the engine and add coolant up to the filler neck if necessary.
4. Install the radiator cap.
5. Check the level of coolant in the reserve tank and fill to the upper level line if it is low (page 3-13).

NOTE:

- When air bleeding is insufficient, level of coolant in the reserve tank will decrease. If so, fill to the upper level line with coolant.

After air bleeding, check that there are no coolant leaks.

THERMOSTAT/THERMOSTAT HOUSING

THERMOSTAT REMOVAL/ INSTALLATION

Drain the coolant (page 8-4).

Remove the bolts [1] and thermostat cover [2].

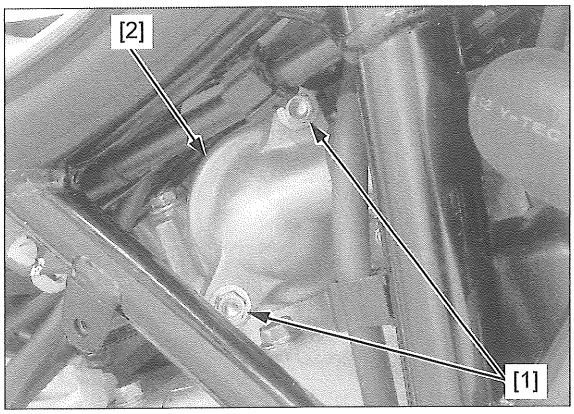

Remove the thermostat [1].

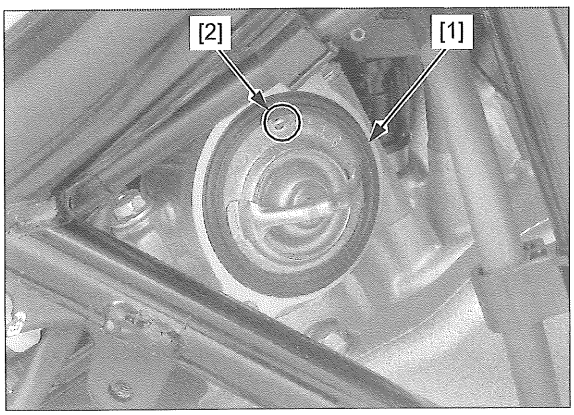

Installation is in the reverse order of removal.

NOTE:

- Install the thermostat with the air bleed hole [2] facing up.

Fill the recommended coolant mixture to the filler neck and bleed the air (page 8-4).

INSPECTION

Visually inspect the thermostat [1] for damage.

Check for damage of the thermostat rubber [2].

Wear insulated gloves and adequate eye protection.

Keep flammable materials away from the electric heating element.

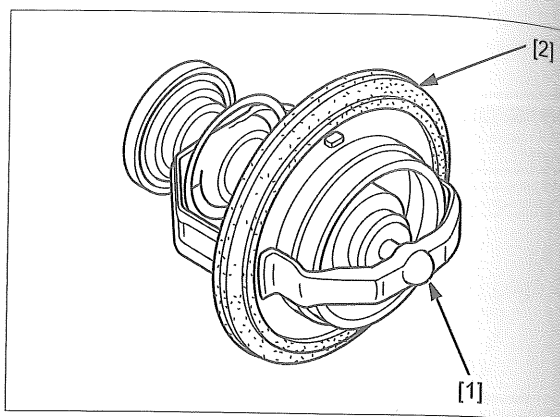

Heat water with an electric heating element to operating temperature for 5 minutes.

Suspend the thermostat [1] the heated water to check its operation.

NOTE:

- Do not let the thermostat or thermometer [2] touch the pan, or you will get false reading.

Replace the thermostat if the valve stays open at room temperature, or if it responds at temperatures other than those specified.

THERMOSTAT BEGIN TO OPEN:
80 – 84°C (176 – 183°F)

VALVE LIFT:
8 mm (0.3 in) minimum at 95°C (203°F)

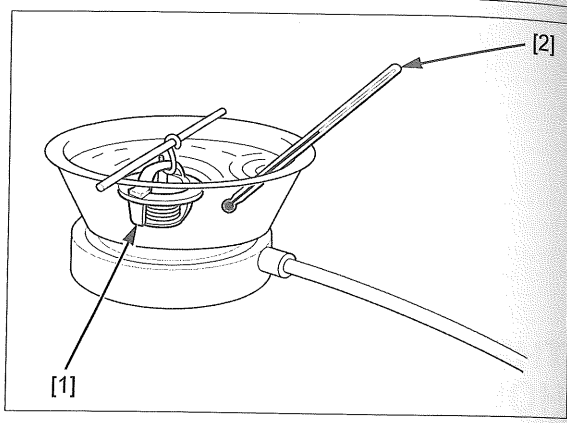

THERMOSTAT HOUSING REMOVAL/ INSTALLATION

Drain the coolant (page 8-4).

Remove the heat guard (page 2-24).

Loosen the water hose band screw [1] and disconnect the upper radiator hose [2].

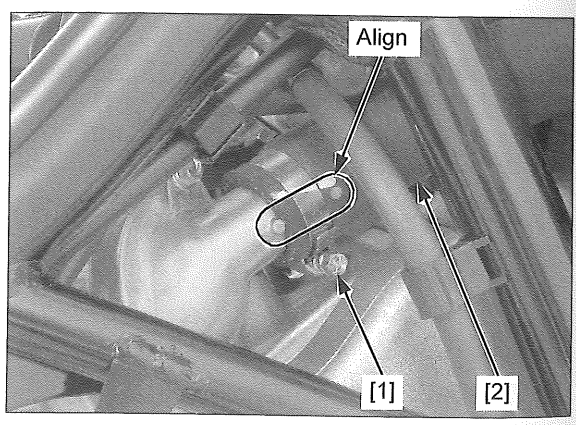

Disconnect the ECT sensor 2P (Black) connector [1].

Loosen the water hose band screw [2] and disconnect the water bypass hose [3].

Remove the bolts [4] and thermostat housing [5].

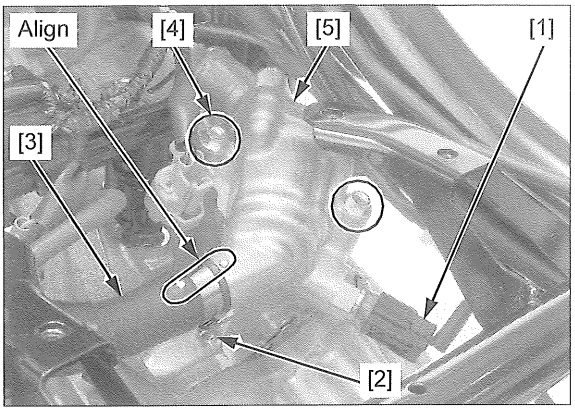

Remove the O-ring [1].

Installation is in the reverse order of removal.

NOTE:

- Replace the O-ring with a new one.
- When connecting the hose, align the paint mark with the index mark on the thermostat cover/housing.
- Tighten the water hose band screws to the specified range (page 8-8).

Fill the recommended coolant mixture to the filler neck and bleed the air (page 8-4).

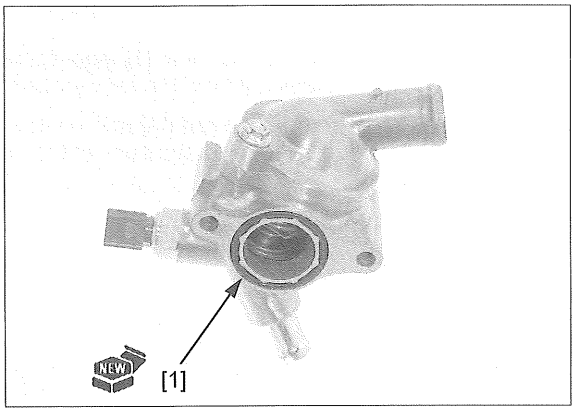

RADIATOR

HOW TO PULL DOWN THE RADIATOR

Remove the step panel/side panel (page 2-18).

Remove the bolt [1] and radiator lower stay [2] by releasing it from the radiator boss [3].

Remove the bolt [4] and release the radiator mounting rubber [5] from the boss of the frame.

Pull down the radiator.

Installation is in the reverse order of removal.

NOTE:

- Make sure the slit of the radiator mounting rubber is facing down.
- Align the slit of the radiator lower stay with the tab of the cylinder head.

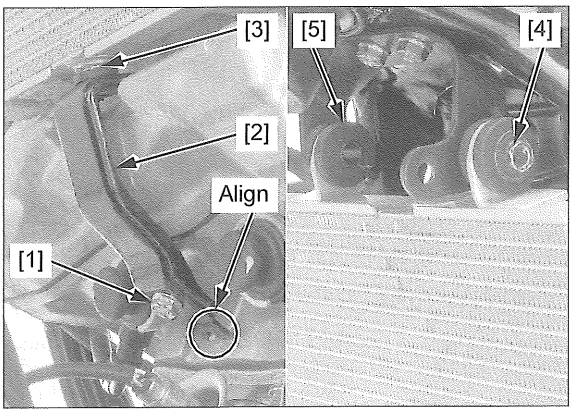

REMOVAL/INSTALLATION

Drain the coolant (page 8-4).

Loosen the water hose band screws [1] and disconnect the lower radiator hose [2] and upper radiator hose [3].

Disconnect the siphon hose [4].

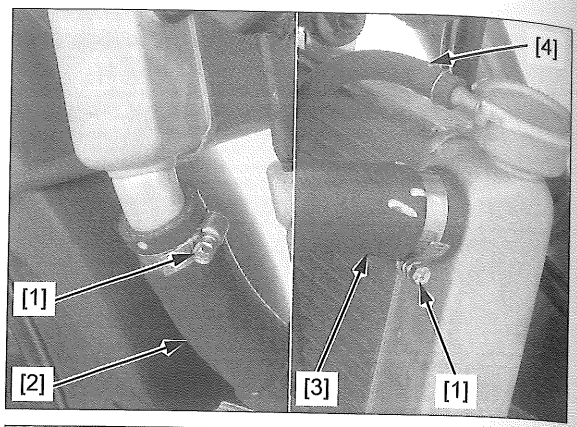

Remove the bolt [1] and radiator lower stay [2] by releasing it from the radiator boss [3].

Remove the bolt [4] and release the radiator mounting rubber [5] from the boss of the frame.

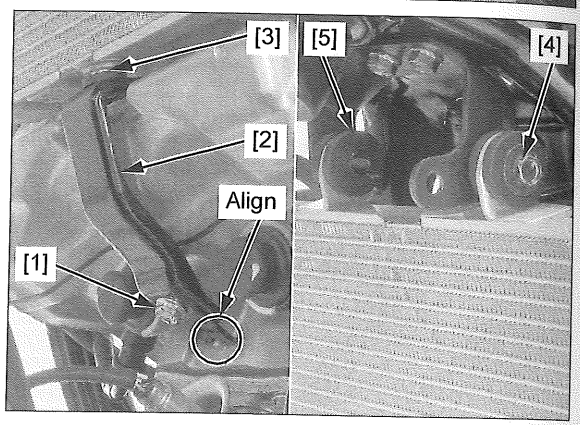

Release the fan motor 2P (Black) connector [1] from the shroud and disconnect it.

Release the air cleaner housing drain hose [2] and main wire harness (to horn) [3] from the wire clamp [4].

Remove the radiator [5].

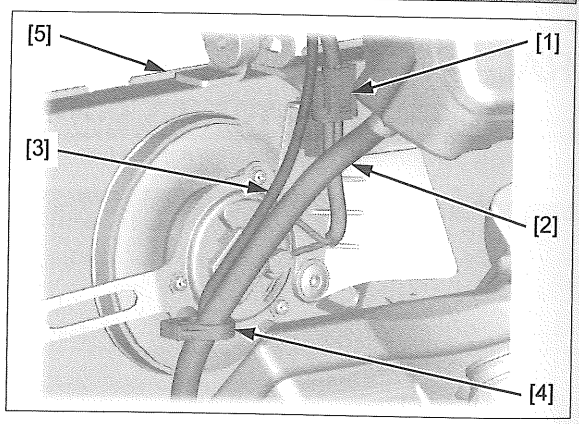

Installation is in the reverse order of removal.

NOTE:

- Make sure the slit of the radiator mounting rubber is facing down.
- Align the slit of the radiator lower stay with the tab of the cylinder head.
- Tighten the water hose band screws to the specified range as shown.
- Route the wire and hoses properly (page 1-20).

Fill the recommended coolant mixture to the filler neck and bleed the air (page 8-4).

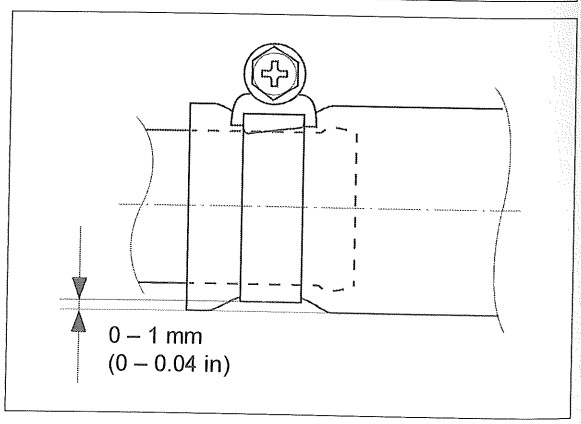

DISASSEMBLY/ASSEMBLY

NOTE:

- Align the cooling fan and fan motor shaft flat surfaces.

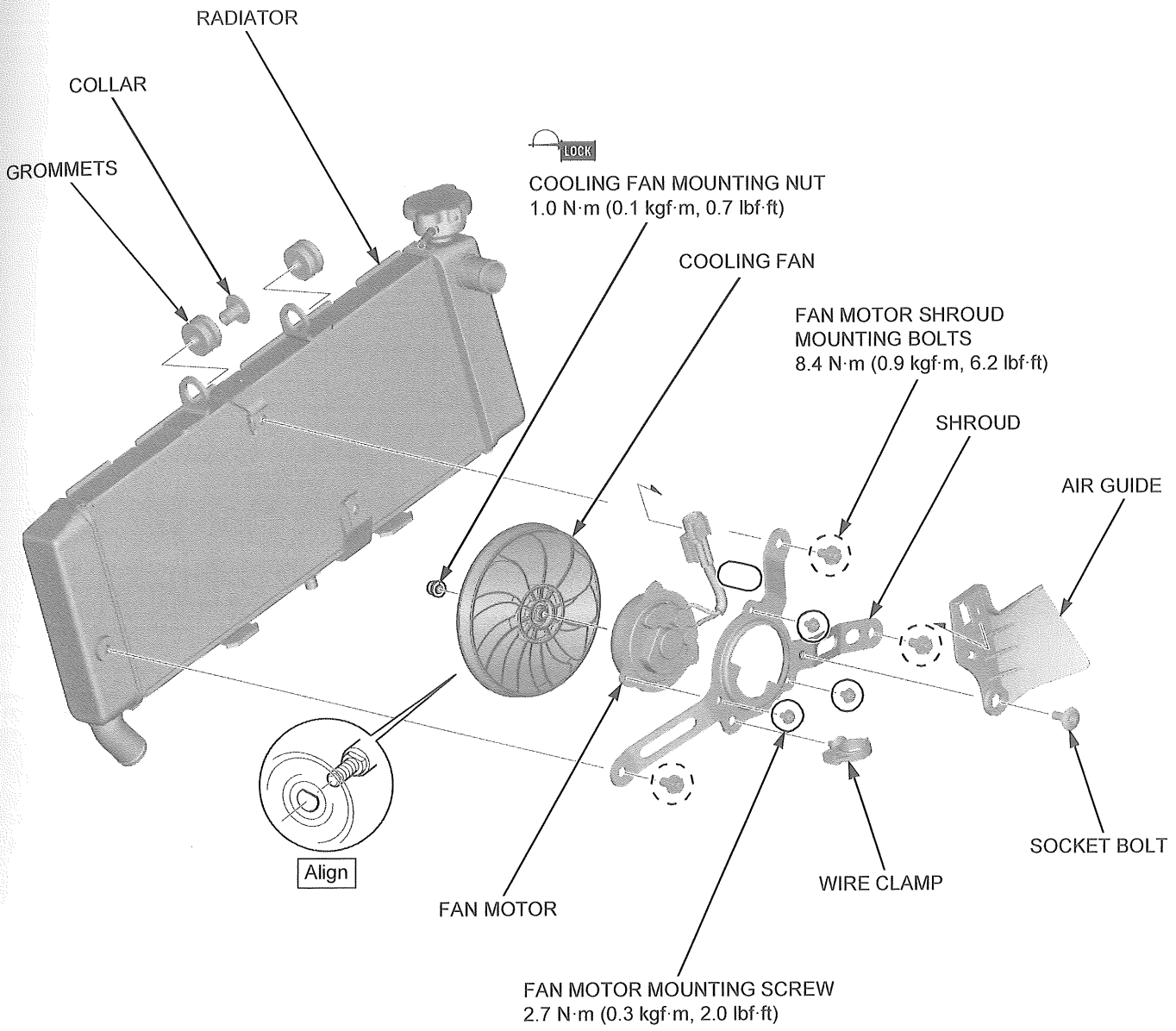

WATER PUMP

MECHANICAL SEAL INSPECTION

Remove the left step panel/side panel (page 2-18).

Check the bleed hole [1] of the water pump for signs of coolant leakage.

- A small amount of coolant weeping from the bleed hole is normal.
- Make sure that there is no continuous coolant leakage from the bleed hole while operating the engine.

Replace the water pump as an assembly if necessary.

Install the left step panel/side panel (page 2-18).

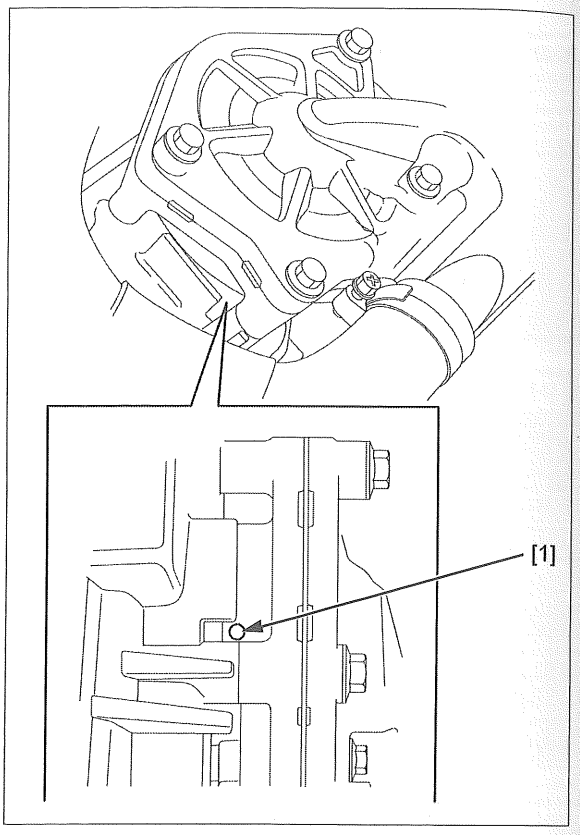

REMOVAL/INSTALLATION

Remove the left step panel/side panel (page 2-18).

Remove the No.1 ignition coil (page 5-9)

Drain the coolant (page 8-4).

Loosen the hose band screws [1] and disconnect the lower radiator hose [2] and bypass hose [3].

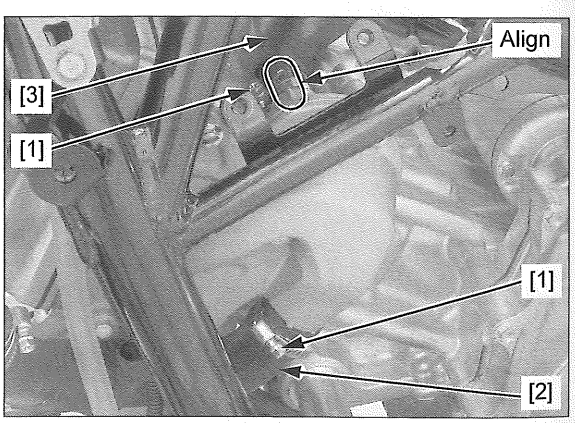

Remove the 6 x 50 mm bolt [1], 6 x 32 mm bolt [2] and 6 x 35 mm bolt [3].

Loosen the 6 x 32 mm bolt [4] and 6 x 35 mm bolt [5].

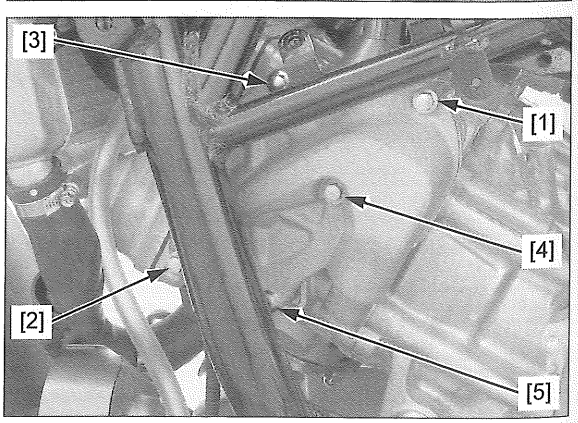

Remove the water pump assembly from the cylinder head and slide it to remove the 6 x 35 mm bolt [1].

Reinstall the water pump assembly in position.

Remove the 6 x 32 mm bolt [2] and sealing washer [3].

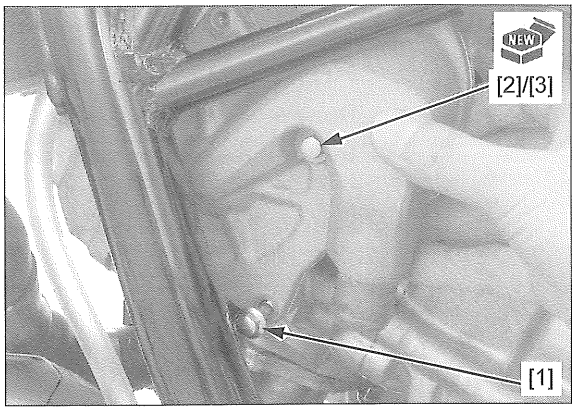

Remove the following:

- Water pump cover [1]
- Gasket [2]
- Plate [3]

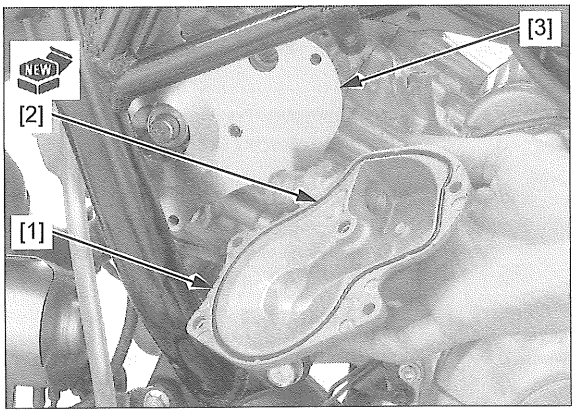

Remove the gasket [1] and dowel pins [2] from the water pump body.

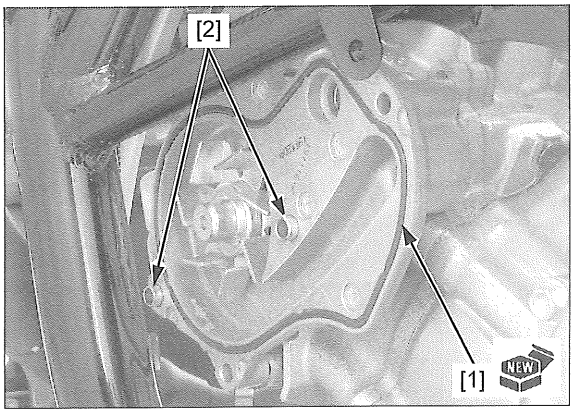

Remove the water pump body [1] from the cylinder head and out of the frame.

Remove the large O-ring [2] and small O-ring [3] from the water pump body.

NOTE:

- Do not disassemble the water pump body.

Installation is in the reverse order of removal.

NOTE:

- Replace the O-rings, gaskets and sealing washer with new ones.
- Apply engine oil to the large O-ring.
- Align the water pump slit with camshaft tab.
- Align the index mark on the water bypass hose with the lug on the water pump (page 8-10).
- Tighten the water hose band screws to the specified range (page 8-7).
- Route the hoses properly (page 1-20).

Fill and bleed the cooling system (page 8-4).

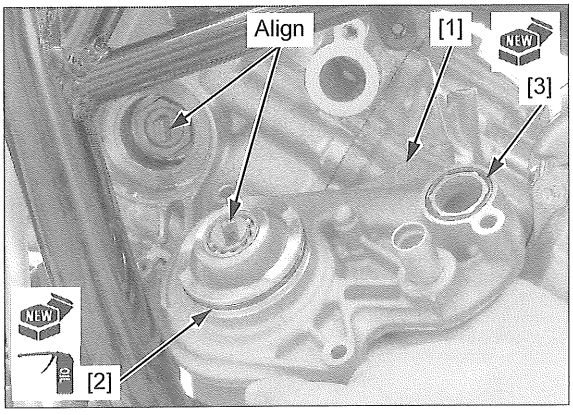

RADIATOR RESERVE TANK

REMOVAL/INSTALLATION

Remove the right step panel/side panel (page 2-18).

Remove the A/F sensor wire [1] from the radiator reserve tank guide [2].

Remove the bolt [3], heat guard plate [4] and collar [5].

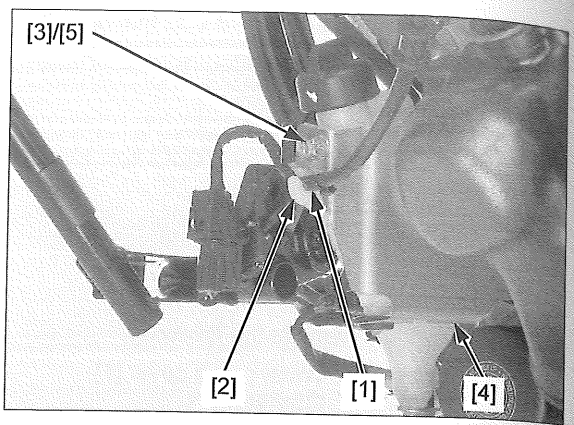

Remove the overflow hose [1] and reserve tank [2] from the reserve tank stay [3].

Remove the overflow hose from the radiator reserve tank guide [4].

Disconnect the siphon hose [5] and drain the coolant from the reserve tank.

Remove the bolt [6] and reserve tank stay.

Installation is in the reverse order of removal.

NOTE:

- Route the hoses properly (page 1-20).

Fill the reserve tank with the recommended coolant (page 8-4).

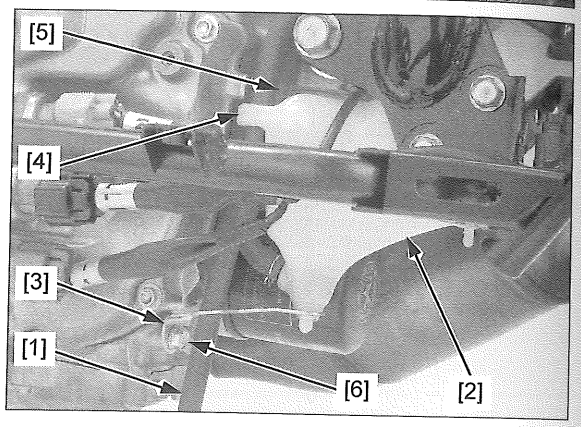

9. LUBRICATION SYSTEM

SERVICE INFORMATION 9-2

TROUBLESHOOTING 9-2

LUBRICATION SYSTEM DIAGRAM 9-3

OIL PRESSURE INSPECTION 9-4

OIL PUMP 9-4

OIL STRAINER 9-6

SERVICE INFORMATION

GENERAL

⚠CAUTION

Used engine oil may cause skin cancer if repeatedly left in contact with the skin for prolonged periods. Although this is unlikely unless you handle used oil on a daily basis, it is still advisable to thoroughly wash your hands with soap and water as soon as possible after handling used oil.

- This section covers service of the oil pump and oil strainer.
- The oil pump and oil strainer can be serviced with the engine installed in the frame.
- The service procedures in this section must be performed with the engine oil drained.
- When removing and installing the oil pump, use care not to allow dust or dirt to enter the engine.
- After the oil pump has been installed, check that there are no oil leaks and that oil pressure is correct.

TROUBLESHOOTING

Oil level too low
- Oil consumption
- External oil leak
- Worn piston rings
- Improperly installed piston rings
- Worn cylinders
- Worn valve stem seals
- Worn valve guide
- Worn valve stem

Low oil pressure
- Oil level low
- Clogged oil strainer
- Faulty oil pump
- Internal oil leak
- Incorrect oil being used
- Oil pressure relief valve stuck open

No oil pressure
- Oil level too low
- Oil pressure relief valve stuck open
- Damaged oil pump
- Internal oil leak

High oil pressure
- Oil pressure relief valve stuck closed
- Clogged oil filter, oil gallery, or metering orifice
- Incorrect oil being used

Oil contamination
- Oil or filter not changed often enough
- Worn piston rings

Oil emulsification
- Blown cylinder head gasket
- Leaky coolant passage
- Entry of water

LUBRICATION SYSTEM DIAGRAM

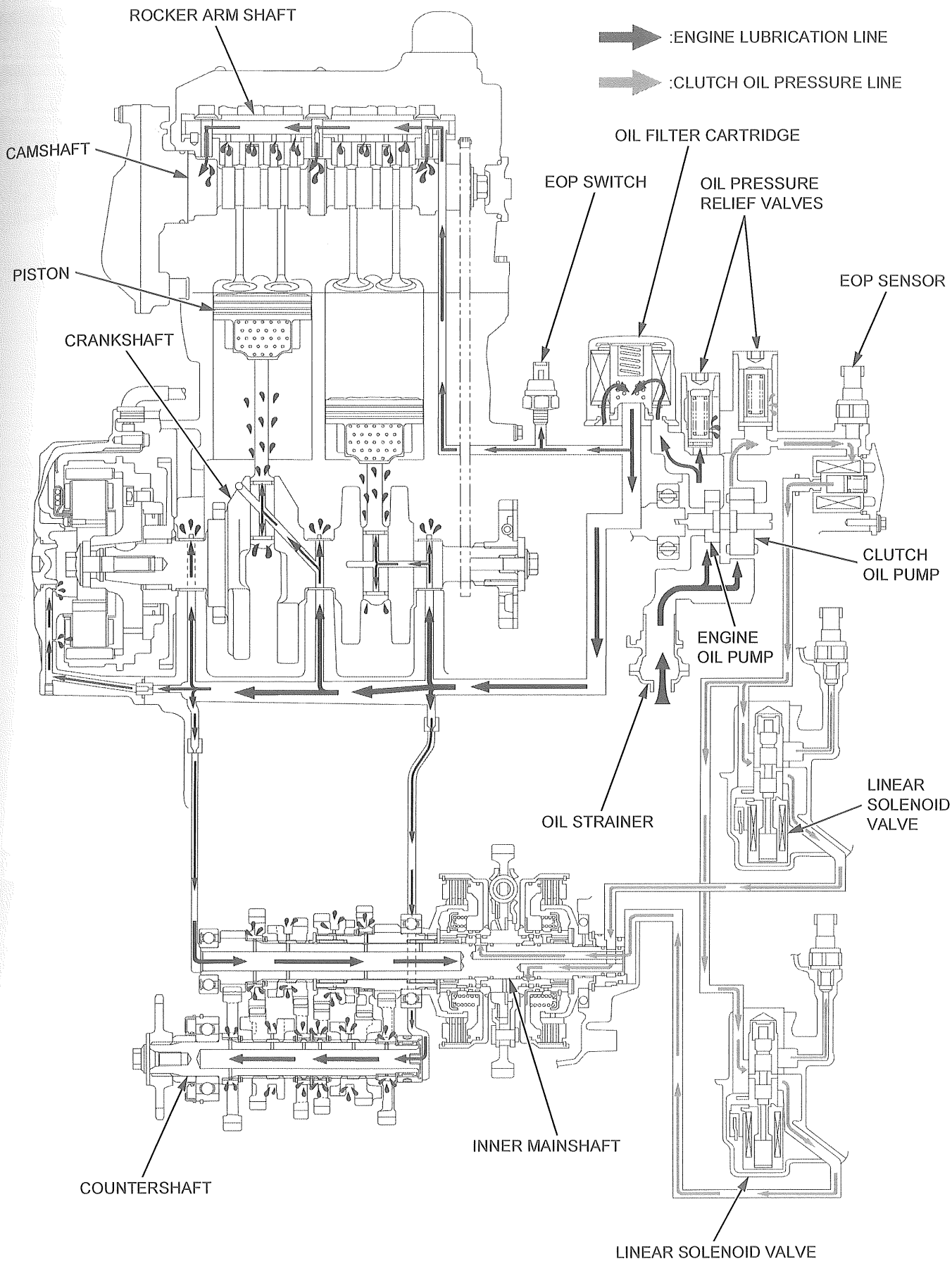

OIL PRESSURE INSPECTION

Remove the engine oil filter cartridge (page 3-10).

Apply engine oil to the O-ring and install the oil pressure attachment [1] onto the oil filter boss.

TOOL:
Oil pressure gauge attachment 070MJ-0010101

Apply engine oil to the O-ring and install the engine oil filter cartridge [2] onto the oil pressure attachment.

TOOL:
Oil filter wrench 07HAA-PJ70101

TORQUE: 26 N·m (2.7 kgf·m, 19 lbf·ft)

Connect the oil pressure gauge [3] and attachment [4] to the oil pressure gauge attachment.

TOOLS:

Oil pressure gauge set	**07506-3000001 or equivalent commercially available**
Oil pressure gauge attachment	**07406-0030000 or equivalent commercially available**

Fill the engine with the recommended engine oil (page 3-10).

Warm the engine to normal operating temperature (approximately 80°C/176°F) and increase the engine speed to 5,000 min^{-1} (rpm) and read the oil pressure.

STANDARD:
470 kPa (4.8 kgf/cm^2, 68 psi)
at 5,000 min^{-1} (rpm)/(80°C/176°F)

Stop the engine and remove the tools.

Install the engine oil filter cartridge (page 3-10).

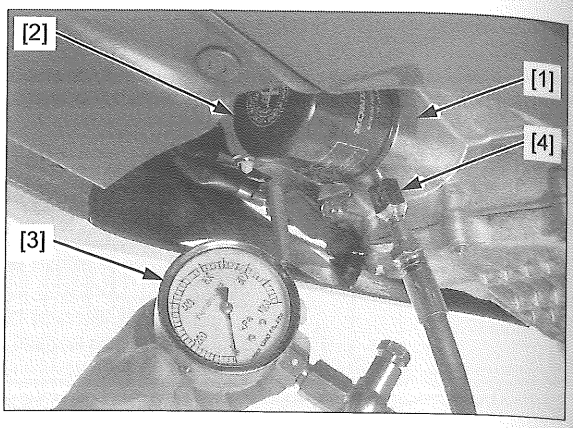

OIL PUMP

REMOVAL/INSTALLATION

Remove the right crankcase cover (page 11-38).

Remove the bolts [1] and oil pump [2].

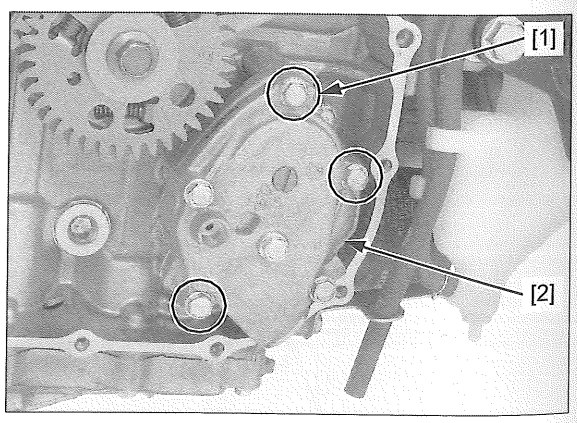

Remove the O-rings [1] and dowel pins [2].

Installation is in the reverse order of removal.

NOTE:
- Always replace the O-rings with new ones.
- Apply engine oil to new O-rings.
- Align the oil pump shaft end with the balancer shaft groove.

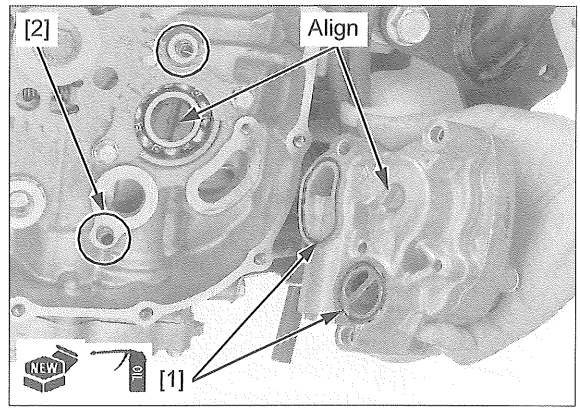

DISASSEMBLY/ASSEMBLY

NOTE:
- Dip all parts in clean engine oil.

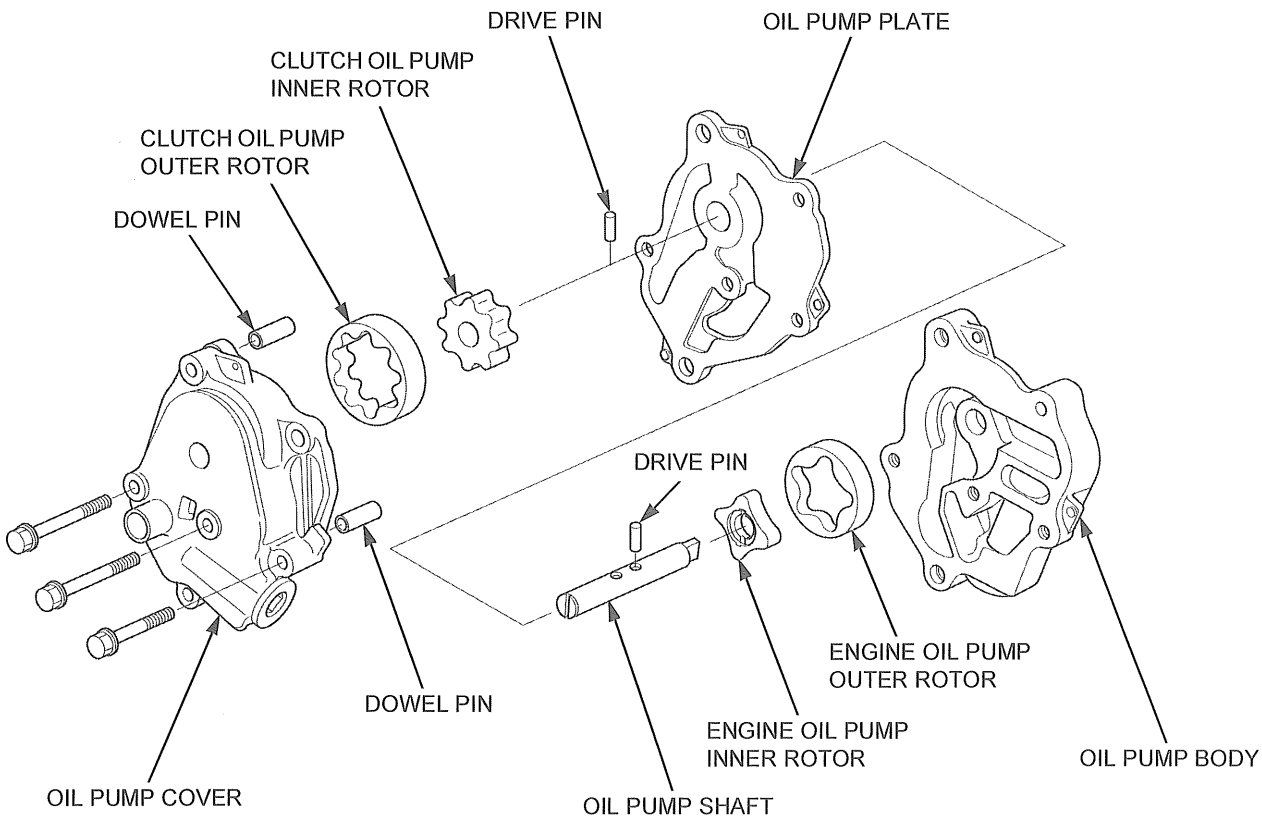

INSPECTION

Inspection the following parts for damage, abnormal wear, deformation, or burning:

- Oil pump shaft
- Drive pin
- Inner rotor
- Outer rotor
- Oil pump body
- Oil pump cover

Measure the oil pump clearances according to LUBRICATION SYSTEM SPECIFICATIONS (page 1-6).

If any of the measurement is out of the service limit, replace the oil pump as an assembly.

OIL STRAINER

REMOVAL

Drain the engine oil (page 3-10).

Remove the muffler/exhaust pipe (page 2-34).

Loosen the bolts [1] in a crisscross pattern in 2 or 3 steps.

Remove the bolts and oil pan [2].

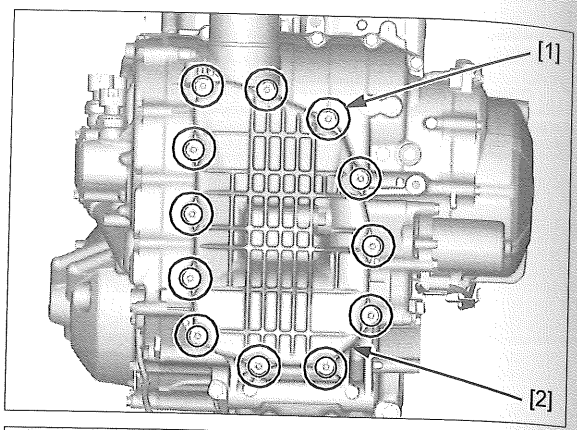

Remove the oil strainer [1] and seal ring [2].

Clean the oil strainer screen and check for damage, replace it if necessary.

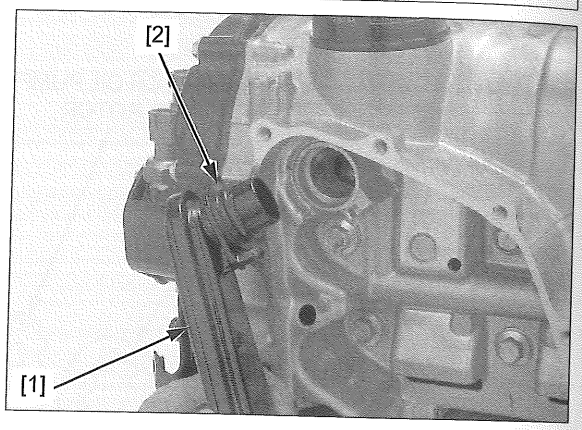

INSTALLATION

Apply engine oil to a new seal ring.

Install the seal ring [1] onto the oil strainer [2].

Install the oil strainer into the crankcase.

NOTE:

- Align the oil strainer boss with the crankcase groove.

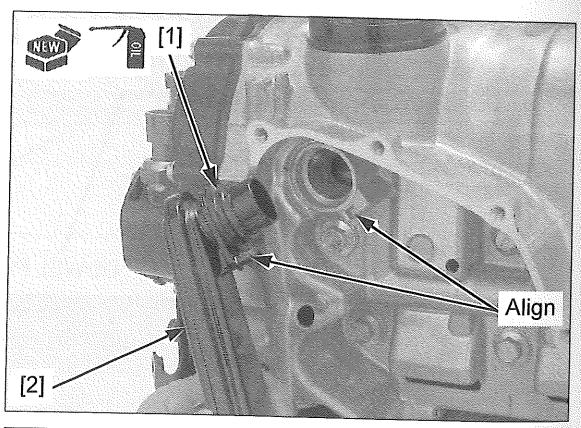

Clean the oil pan mating surface thoroughly.

Apply liquid sealant (TB1207B manufactured by Three Bond or equivalent) to the oil pan mating surface as shown.

NOTE:

- Do not apply more liquid sealant than necessary.

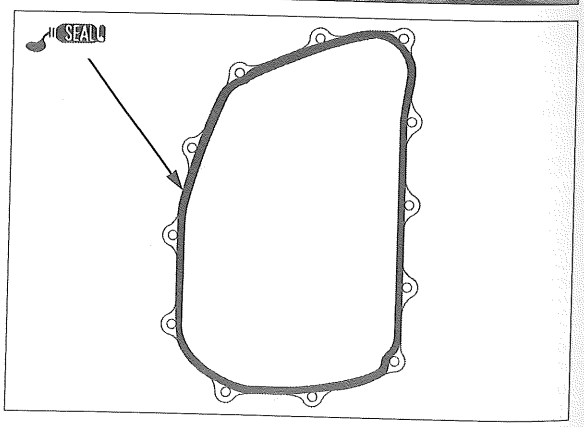

Install the oil pan [1] and bolts [2].

Tighten the bolts in a crisscross pattern in 2 or 3 steps.

Install the muffler/exhaust pipe (page 2-34).

Fill the engine with the recommended engine oil and check that there are no oil leaks (page 3-9).

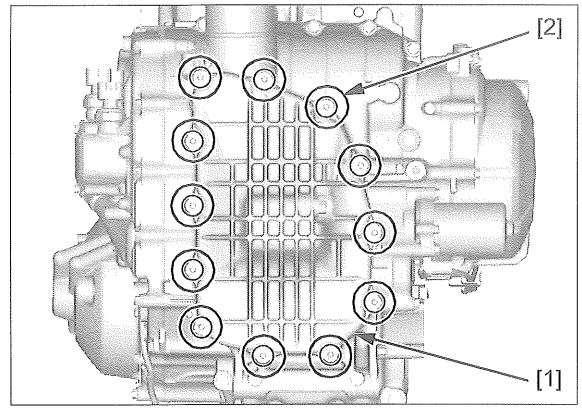

10. CYLINDER HEAD/VALVES

SERVICE INFORMATION 10-2

TROUBLESHOOTING 10-2

COMPONENT LOCATION 10-3

CYLINDER COMPRESSION TEST 10-4

CYLINDER HEAD COVER 10-4

ROCKER ARM 10-5

CAM CHAIN TENSIONER 10-8

CAMSHAFT 10-10

CYLINDER HEAD 10-13

SERVICE INFORMATION

GENERAL

- This section covers service of the cylinder head, valves, camshaft, and rocker arm.
- The rocker arm service can be done with the engine installed in the frame. The cylinder head, valves, and camshaft services requires engine removal.
- Be careful not to damage the mating surfaces when removing the cylinder head cover and cylinder head.
- When disassembling, mark and store the disassembled parts to ensure that they are reinstalled in their original locations.
- Clean all disassembled parts with cleaning solvent and dry them by blowing them off with compressed air before inspection.
- Camshaft lubricating oil is fed through the oil passages in the cylinder head. Clean the oil passages before assembling cylinder head.

TROUBLESHOOTING

- Engine top-end problems usually affect engine performance. These problems can be diagnosed by a compression test or by tracing engine noises to the top-end with a sounding rod or stethoscope.
- If the performance is poor at low speeds, check for white smoke in the crankcase breather hose. If the hose is smoky, check for a seized piston ring (page 14-14).

Compression too low, hard starting, or poor performance at low speed

- Valves:
  - Incorrect valve clearance adjustment
  - Burned or bent valve
  - Incorrect valve timing
  - Broken valve spring
  - Uneven valve seating
- Cylinder head:
  - Leaking or damaged cylinder head gasket
  - Warped or cracked cylinder head
  - Loose spark plug
- Worn cylinder, piston, or piston rings (page 14-14)

Compression too high, overheating, or knocking

- Excessive carbon build-up on combustion chamber or piston head

Excessive smoke

- Cylinder head:
  - Worn valve stem or valve guide
  - Damaged stem seal
- Worn cylinder, piston, or piston rings (page 14-14)

Excessive noise

- Cylinder head:
  - Incorrect valve clearance adjustment
  - Sticking valve or broken valve spring
  - Damaged or worn camshaft
  - Loose or worn cam chain
  - Worn or damaged cam chain
  - Worn or damaged cam chain tensioner
  - Worn cam sprocket teeth
  - Worn rocker arm and/or shaft
  - Worn rocker arm and valve stem end
- Worn cylinder, piston, or piston rings (page 14-14)

Rough idle

- Low cylinder compression

COMPONENT LOCATION

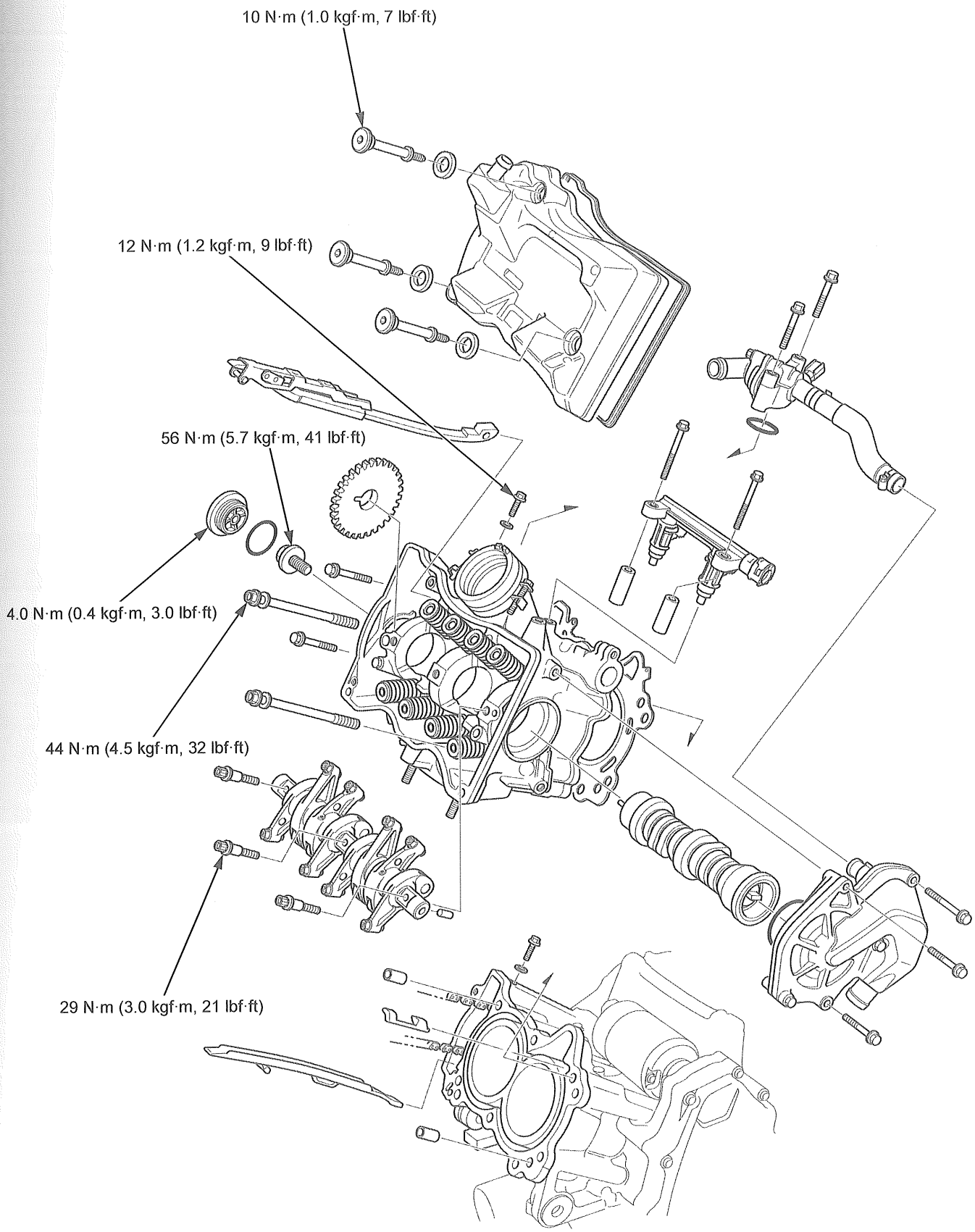

CYLINDER COMPRESSION TEST

Warm the engine to normal operating temperature.

Stop the engine and remove the all spark plug caps and spark plugs (page 3-6).

Install a compression gauge [1] into the spark plug hole.

Open the throttle all the way and crank the engine with the starter motor until the gauge reading stops rising.

The maximum reading is usually reached within 4 – 7 seconds.

STANDARD:
1,800 kPa (18.4 kgf/cm², 261 psi) at 470 min⁻¹ (rpm)

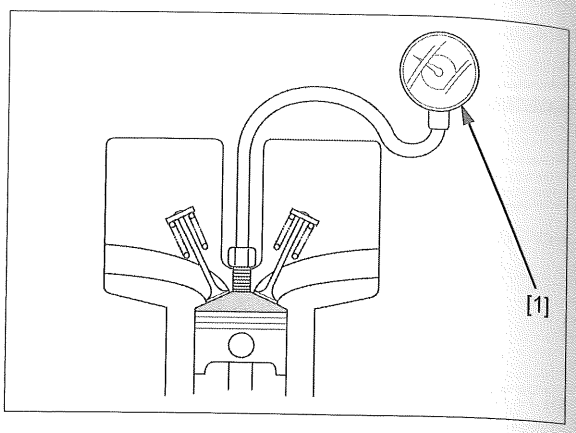

Low compression can be caused by:

- Blown cylinder head gasket
- Improper valve clearance adjustment
- Valve leakage
- Worn piston ring or cylinder

High compression can be caused by:

- Carbon deposits on combustion chamber or piston head

CYLINDER HEAD COVER

REMOVAL/INSTALLATION

Remove the radiator (page 8-7).

Disconnect the crankcase breather hose [1] from the cylinder head cover [2].

Remove the cylinder head cover socket bolts [3], mounting rubbers [4], and cylinder head cover.

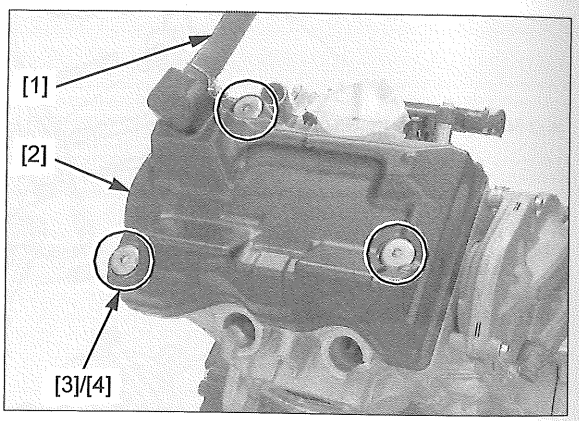

Remove the cylinder head cover packing [1] from the cylinder head cover.

NOTE:

- Always replace the cylinder head cover packing with a new one.

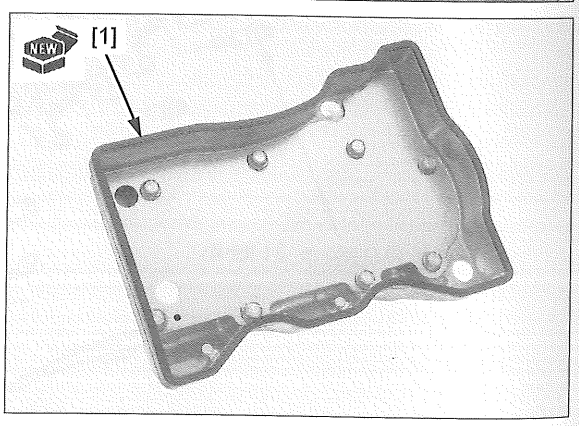

Installation is in the reverse order of removal.

TORQUE:
Cylinder head cover socket bolts:
10 N·m (1.0 kgf·m, 7 lbf·ft)

NOTE:
- Check that the mounting rubbers [1] are in good condition and replace them if necessary.
- Install the mounting rubbers with their "UP" mark [2] facing up.
- Route the hoses and wires properly (page 1-20).

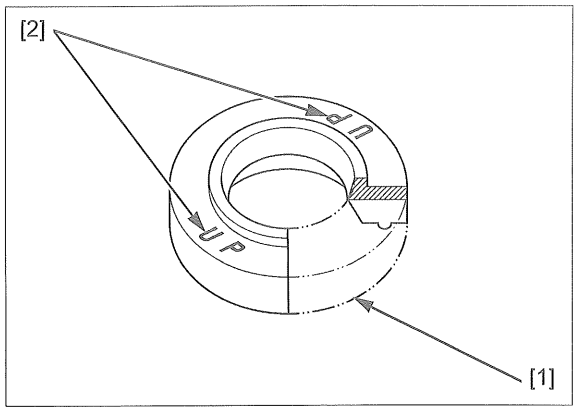

CAM CHAIN INSPECTION

Remove the cylinder head cover (page 10-4).

Measure the cam chain tensioner wedge B [1] length.

SERVICE LIMIT: 6.0 mm (0.24 in)

Replace the cam chain with a new one if the projection exceeds the service limit.

For the cam chain replacement, remove the following:

– Cam sprocket (page 10-10)
– Primary drive gear (page 11-50)

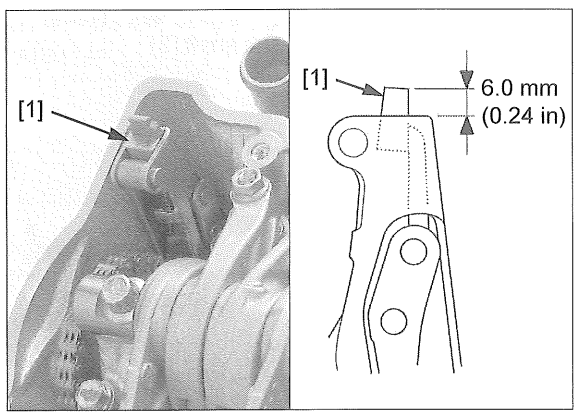

ROCKER ARM

REMOVAL

Remove the following:

– Cylinder head cover (page 10-4)
– Camshaft maintenance cap (page 3-7)
– Crankshaft hole cap (page 3-7)

Turn the crankshaft counterclockwise by turning the flywheel mounting bolt and align the "▽" mark on the cam sprocket with the lower index line on the cylinder head.

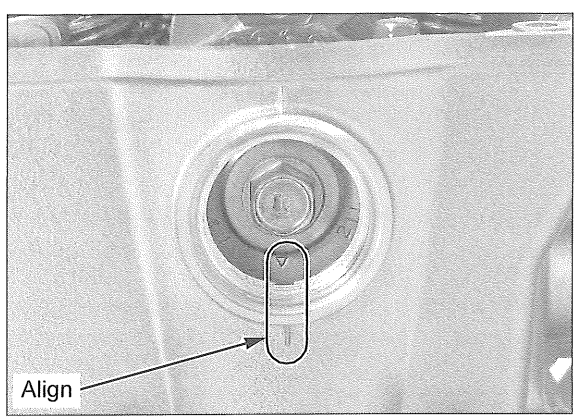

Remove the rocker arm shaft bolts [1].

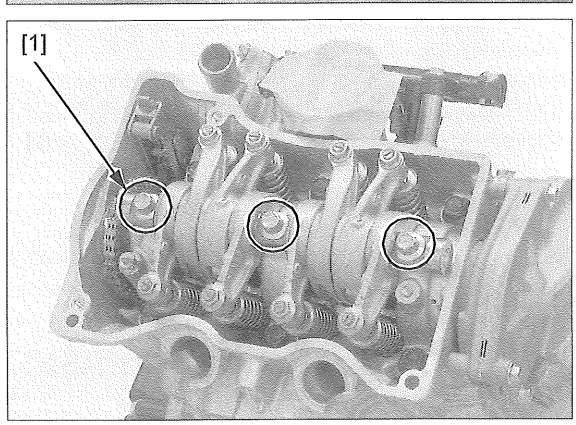

Remove the rocker arm assembly [1].

NOTE:

- Be careful not to let the dowel pin [2] fall into the crankcase.

Remove the dowel pin from the rocker arm shaft.

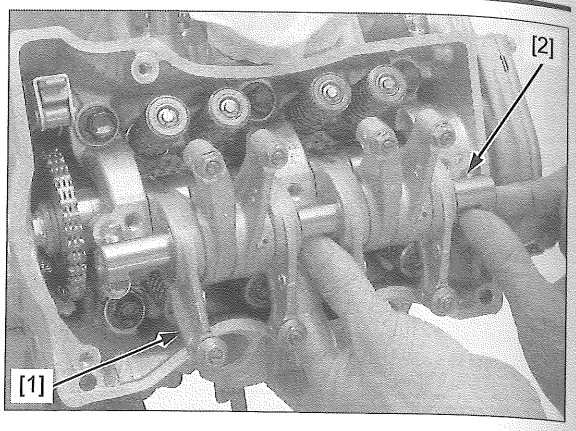

DISASSEMBLY

Remove the washers [1] and rocker arms [2] from the rocker arm shaft [3].

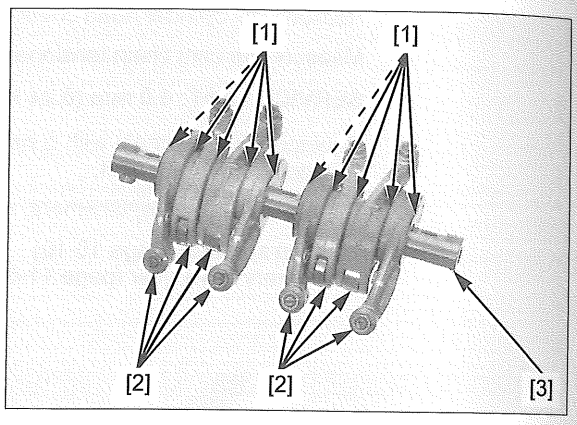

INSPECTION

inspect the following parts for damage, abnormal wear, deformation, burning, or clogs in oil passages.

- Rocker arms
- Washers
- Rocker arm shafts

Measure each part and clearance according to CYLINDER HEAD/VALVES SPECIFICATIONS (page 1-6).

Replace any part if it is out of the service limit.

ASSEMBLY

Apply molybdenum oil solution to the rocker arm sliding surface and rocker arm shaft outer surface.

Install the washers and rocker arms to the rocker arm shaft.

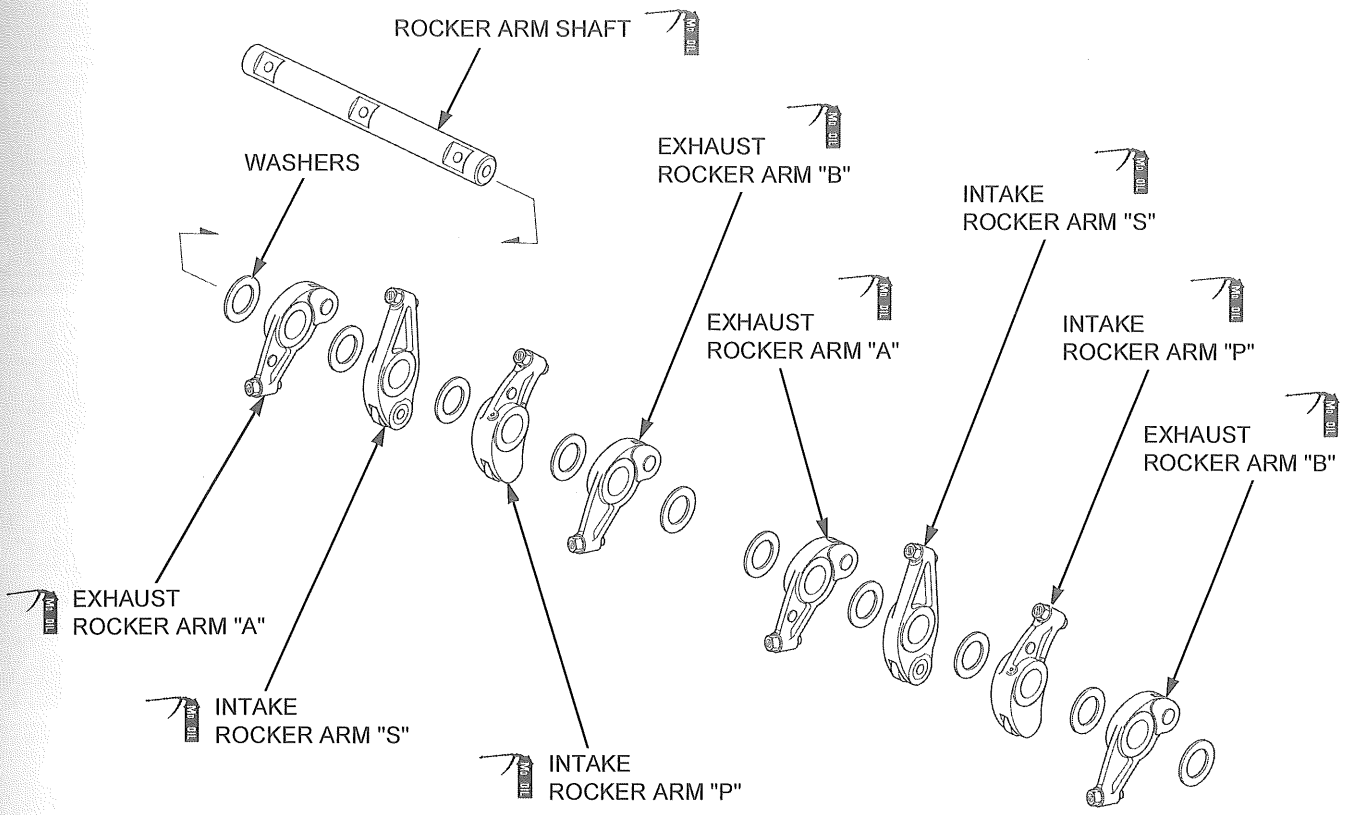

NOTE:

- The rocker arms have the following identification marks [1] and white paint marks [2]:

	IDENTIFICATION MARK	WHITE PAINT MARK
INTAKE ROCKER ARM "S"	–	O
INTAKE ROCKER ARM "P"	–	–
EXHAUST ROCKER ARM "A"	PWC-A	O
EXHAUST ROCKER ARM "B"	PWC-B	O

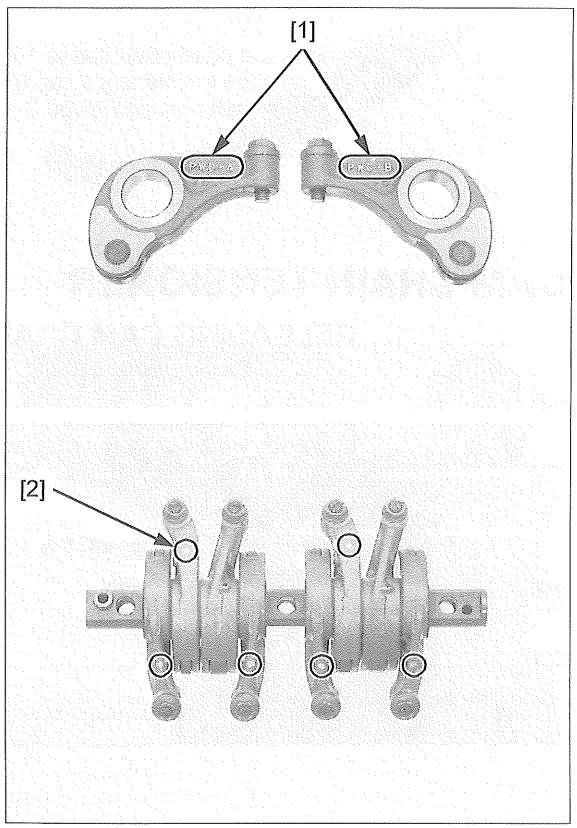

INSTALLATION

Make sure the "▽" mark on the cam sprocket facing the lower index line on the cylinder head.

If it does not align, turn the crankshaft counterclockwise by turning the flywheel mounting bolt and align it.

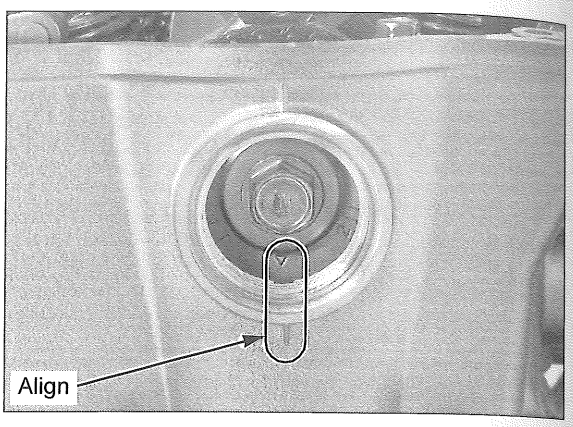

Install the dowel pin [1] to the rocker arm shaft.

Install the rocker arm assembly [2].

NOTE:

- Be careful not to let the dowel pin fall into the crankcase.
- Align the rocker arm shaft boss [3] with the cylinder head hole [4].
- Align the dowel pin with the cylinder head hole [5].
- Make sure the washers [6] are installed in the correct position.

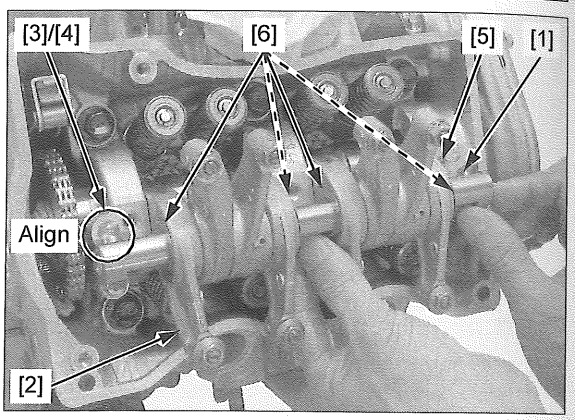

Apply engine oil to the threads and seating surface of the rocker arm shaft bolts [1].

Install bolts and tighten them to the specified torque.

TORQUE: 29 N·m (3.0 kgf·m, 21 lbf·ft)

Install the following:

– Cylinder head cover (page 10-4)
– Camshaft maintenance cap (page 3-7)
– Crankshaft hole cap (page 3-7)

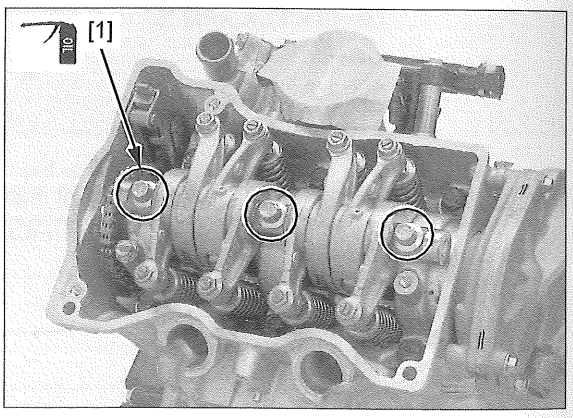

CAM CHAIN TENSIONER

RELEASING CAM CHAIN TENSION

Remove the cylinder head cover (page 10-4).

Install an O.D. 2 mm pin [1] into the cam chain tensioner wedge A hole while pulling the wedge A [2] straight up and pushing down the wedge B [3].

NOTE:

- Be careful not to let the 2 mm pin fall into the crankcase.

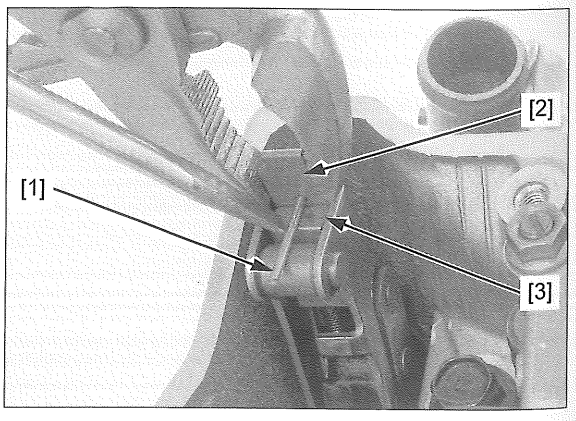

REMOVAL/INSTALLATION

Remove the thermostat housing (page 8-5).

Release the cam chain tension (page 10-8).

Remove the cam chain tensioner bolts [1] and sealing washers [2].

Remove the cam chain tensioner [3].

Installation is in the reverse order of removal.

TORQUE:

Cam chain tensioner bolts:
12 N·m (1.2 kgf·m, 9 lbf·ft)

NOTE:

- Align the tensioner end with the groove in the crankcase.
- Always replace the sealing washers with a new one.

Apply the cam chain tension (page 10-9).

Install the thermostat housing (page 8-5).

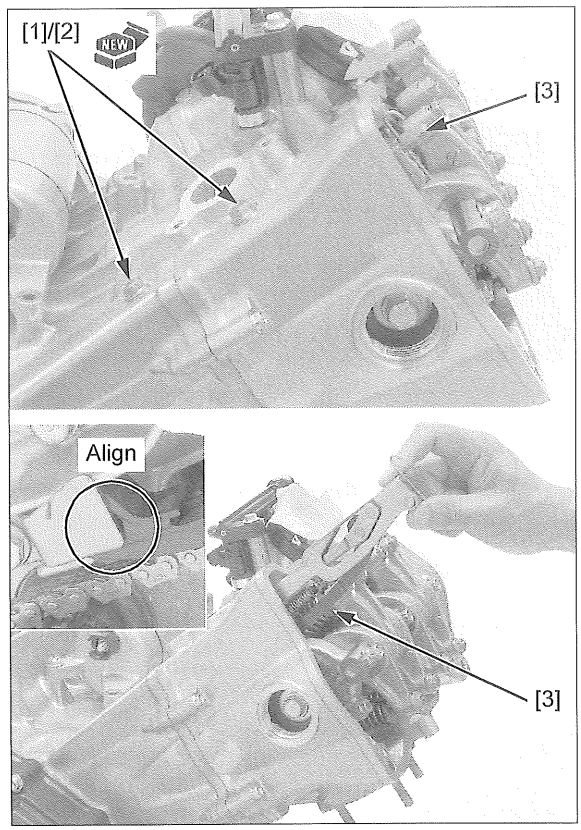

INSPECTION

Remove the cam chain tensioner (page 10-9).

Check the cam chain tensioner [1] for wear or damage.

Replace the cam chain tensioner if necessary.

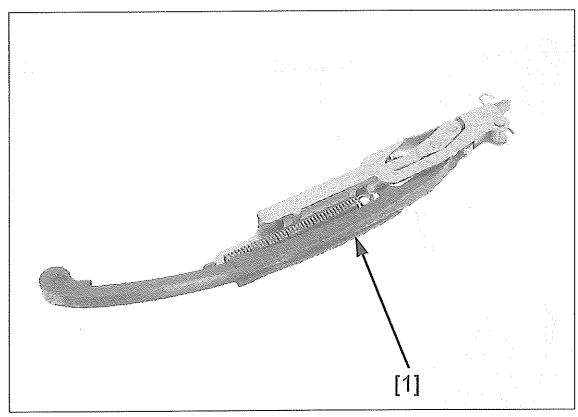

APPLYING CAM CHAIN TENSION

Remove the O.D. 2 mm pin [1] from the cam chain tensioner wedge A hole while pulling the wedge A [2] straight up and pushing down the wedge B [3].

NOTE:

- Be careful not to let the 2 mm pin fall into the crankcase.

Install the cylinder head cover (page 10-4).

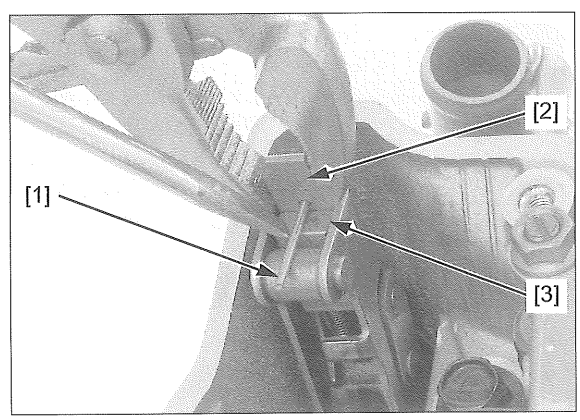

CAMSHAFT

REMOVAL

Remove the engine (page 15-4).

Remove the rocker arm assembly (page 10-5).

Release the cam chain tension (page 10-8).

Loosen the water hose band screw [1] and disconnect the water bypass hose [2].

Remove the bolts [3] and water pump [4].

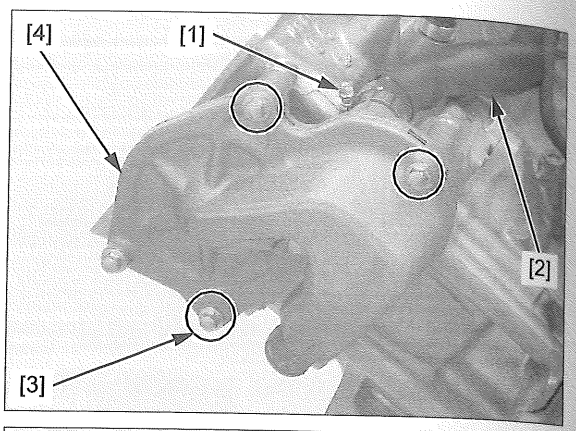

Remove the O-rings [1] from the water pump [2].

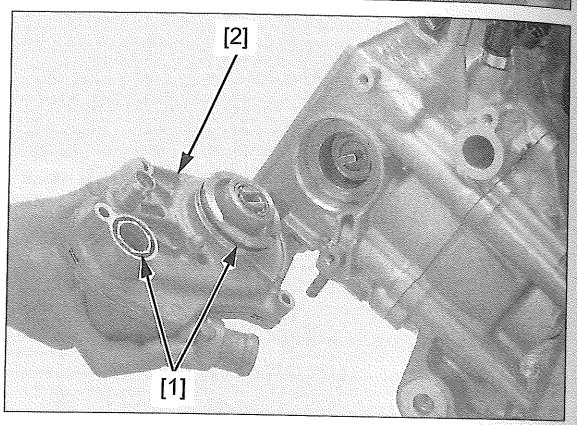

If you plan to remove the camshaft cap [1], hold the flywheel mounting bolt and remove the camshaft cap.

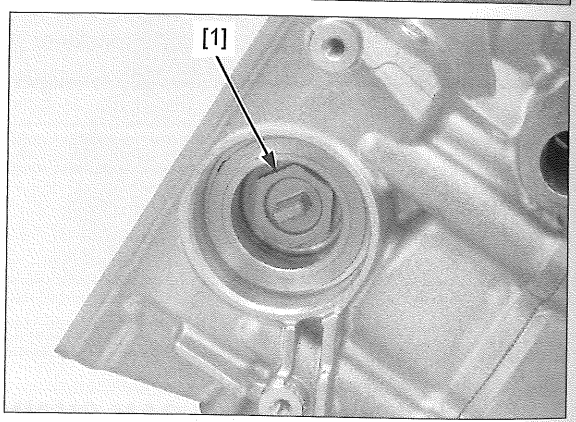

Hold the flywheel mounting bolt and loosen the cam sprocket bolt/washer [1].

Remove the cam sprocket bolt/washer and cam sprocket [2] by removing the cam chain [3] from the cam sprocket.

NOTE:

- Attach a piece of wire to the cam chain to prevent it from falling into the crankcase.

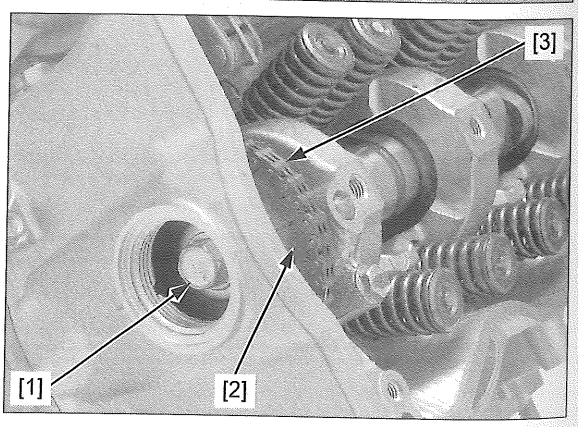

Remove the camshaft [1].

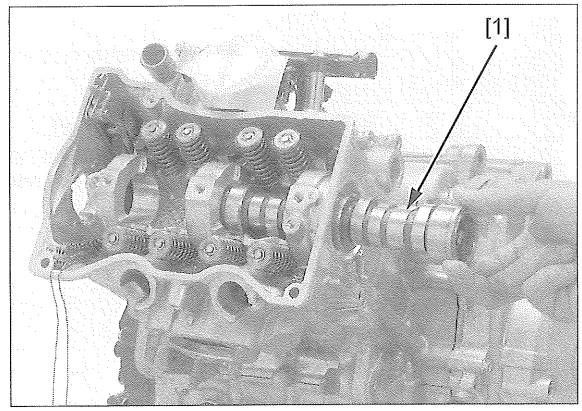

INSPECTION

Inspect the following parts for damage, abnormal wear, deformation, burning, or clogs in oil passages.

- Cam sprocket
- Camshaft

Measure each part according to CYLINDER HEAD/ VALVES SPECIFICATIONS (page 1-6).

Replace any part if it is out of the service limit.

INSTALLATION

Remove the timing hole cap (page 3-7).

Turn the crankshaft counterclockwise by turning the flywheel mounting bolt and align the "1T" mark [1] on the flywheel with the index notch [2] on the alternator cover.

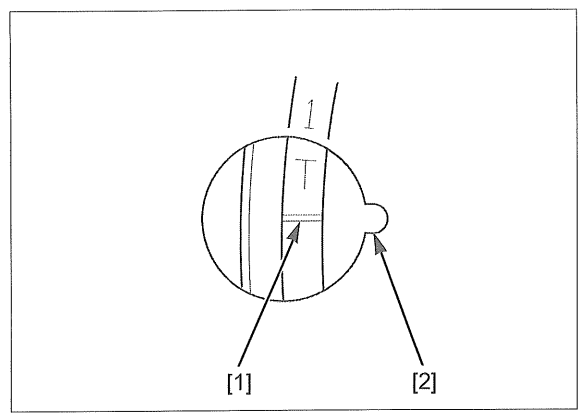

Apply molybdenum oil solution to the camshaft lobes, journals, and thrust surfaces.

Install the camshaft [1].

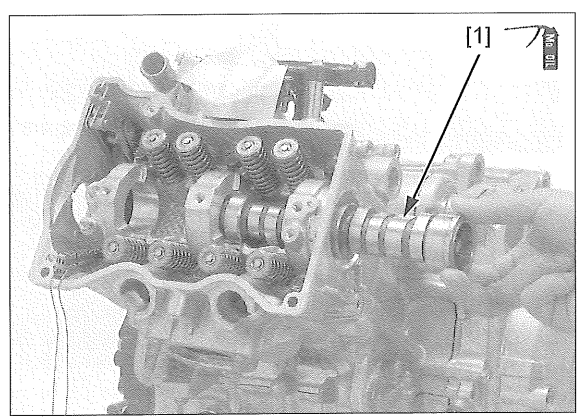

Install the cam chain [1] onto the cam sprocket [2].

Install the cam sprocket onto the camshaft.

NOTE:

- Do not turn the crankshaft.
- Align the "1" mark on the cam sprocket with the upper index line on the cylinder head.
- Align the cam sprocket groove with the camshaft pin by rotating the camshaft.

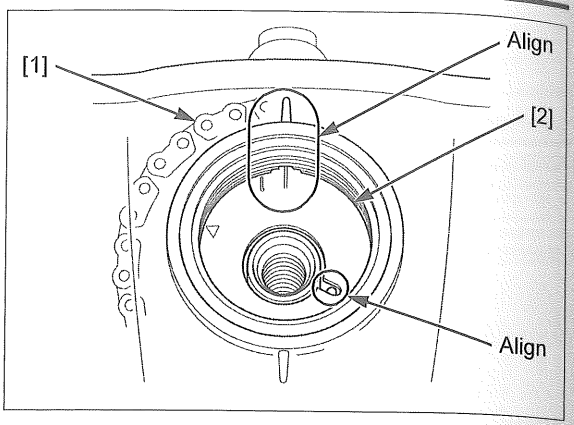

Apply engine oil to the threads and seating surface of the cam sprocket bolt/washer [1].

Install the bolt/washer.

Hold the flywheel mounting bolt and tighten the bolt/washer to the specified torque.

TORQUE: 56 N·m (5.7 kgf·m, 41 lbf·ft)

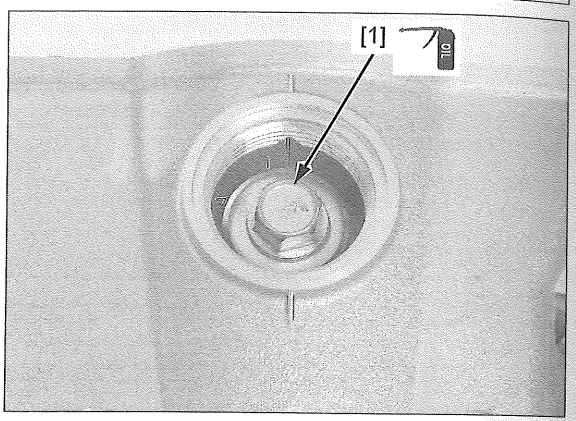

If the camshaft cap [1] is removed, hold the flywheel mounting bolt and tighten the camshaft cap to the specified torque.

TORQUE: 30 N·m (3.0 kgf·m, 22 lbf·ft)

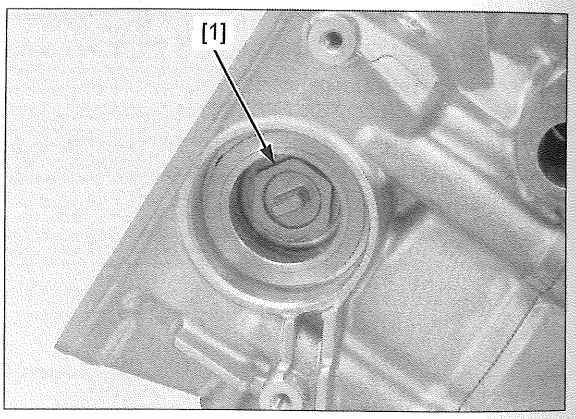

Apply engine oil to a new large O-ring [1].

Install the large O-ring to the water pump [2].

Install a new small O-ring [3] to the water pump.

Install the water pump to the cylinder head.

NOTE:

- Align the water pump shaft groove with camshaft tab.

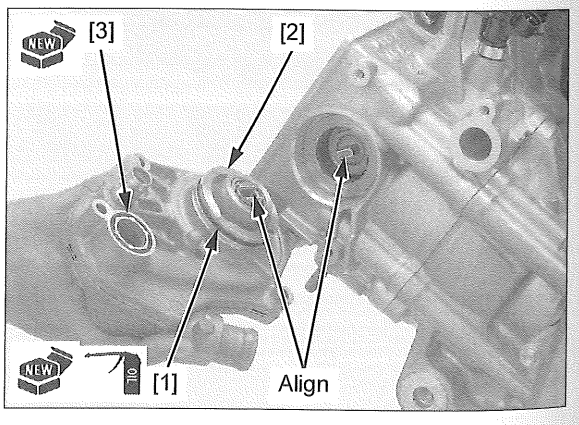

Install and tighten the bolts [1].

Connect the water bypass hose [2] to the water pump [3].

NOTE:

- Align the water bypass hose paint mark with the index lug on the water pump.

Tighten the hose band screw [4] to the specified range (page 8-8).

Apply the cam chain tension (page 10-9).

Install the rocker arm assembly (page 10-8).

Install the engine in the frame (page 15-9).

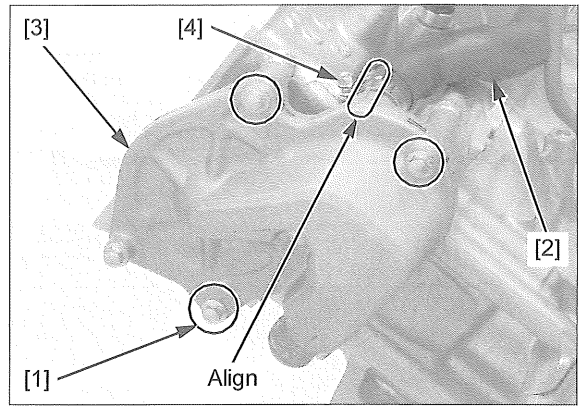

CYLINDER HEAD

REMOVAL

Remove the following:

- Engine (page 15-4)
- Camshaft maintenance cap (page 3-7)
- Cylinder head cover (page 10-4)
- Cam chain tensioner (page 10-9)
- Right crankcase cover (page 11-38)

Turn the crankshaft clockwise by turning the primary drive gear bolt [1] and align the index lines [2] with the crankcase mating surface, while the "TOP" mark [3] is facing down.

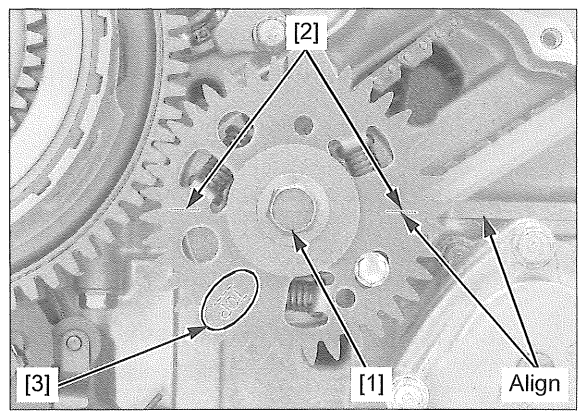

Make sure the "▽" mark on the cam sprocket is facing the lower index line on the cylinder head.

NOTE:

- If it does not align, turn the crankshaft clockwise by turning the primary drive gear bolt and align it.

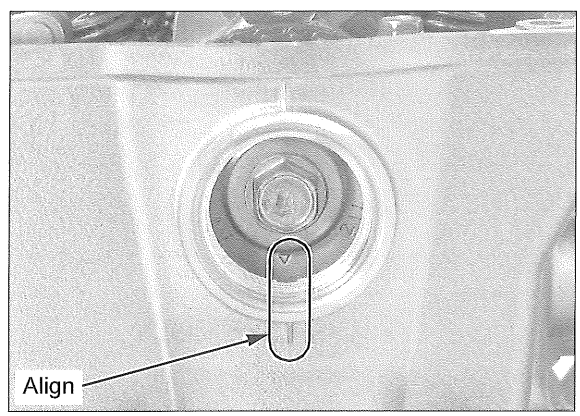

Insert the gear holder [1] between the primary drive gear and driven gear.

TOOL:

Gear holder, 2.5	**07724-0010100**

Remove the cam sprocket bolt/washer [2].

Remove the cam sprocket [3] by removing the cam chain [4] from the cam sprocket.

NOTE:

- Attach a piece of wire to the cam chain to prevent it from falling into the crankcase.

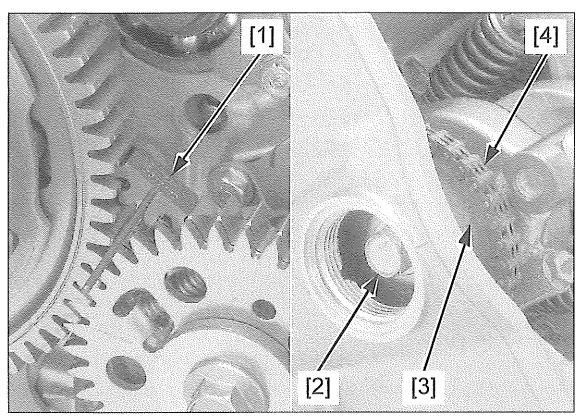

Remove the 6 mm bolts [1].

Loosen the cylinder head special bolts [2] in a crisscross pattern in 2 or 3 steps.

Remove the cylinder head special bolts.

Remove the cylinder head [3].

NOTE:

- Do not strike the cylinder too hard and do not damage the mating surface with a screwdriver.

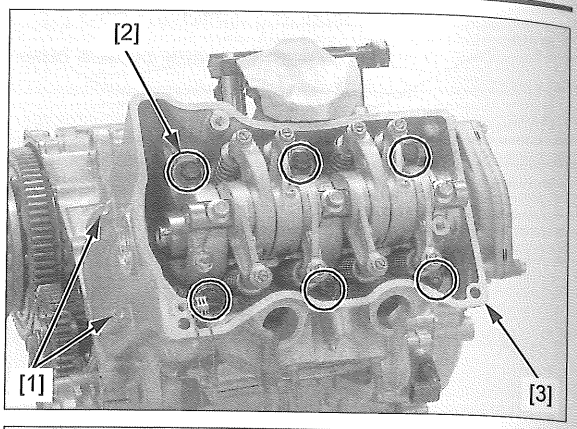

Remove the gasket [1], dowel pins [2], and cam chain guide [3].

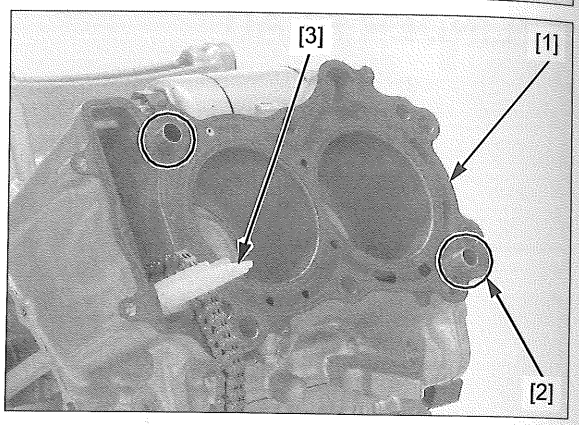

Remove the partition plate [1].

Check the partition plate for deterioration or damage.

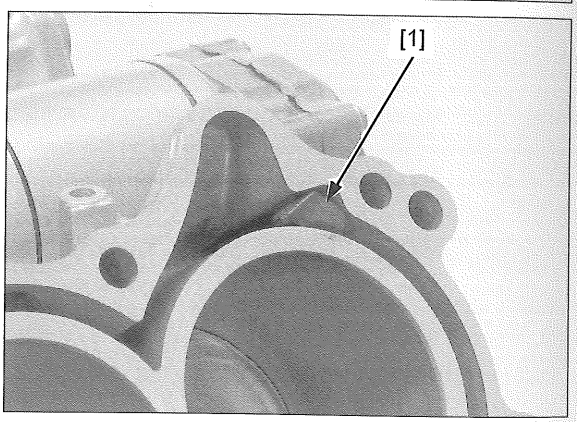

DISASSEMBLY

Remove the following:

- Cylinder head (page 10-13)
- Spark plug (page 3-6)
- Fuel injector (page 7-13)
- Camshaft (page 10-10)

Loosen the insulator band screw [1] and remove the insulator [2].

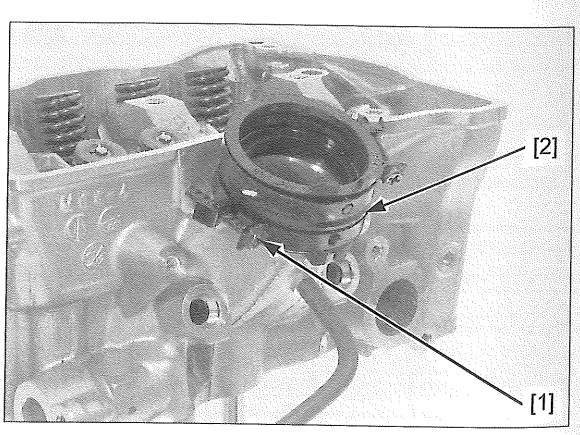

Remove the valve spring cotters [1] using the special tool as shown.

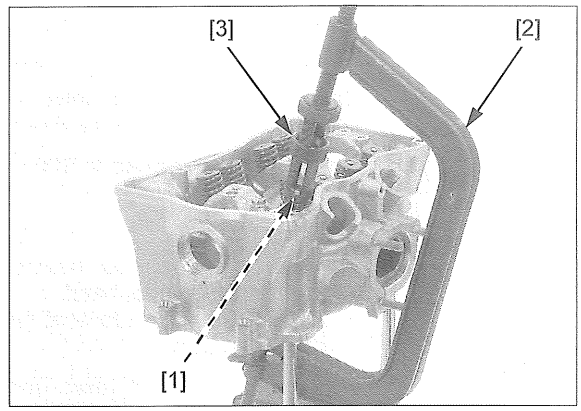

TOOL:

Valve spring compressor [2]	**07757-0010000**
Valve spring compressor attachment [3]	**07959-KM30101**

NOTE:

- To prevent loss of tension, do not compress the valve springs more than necessary to remove the cotters.

Remove the following:

- Spring retainer [1]
- Valve spring [2]
- Stem seal [3]
- Valve spring seat [4]
- Valve [5]

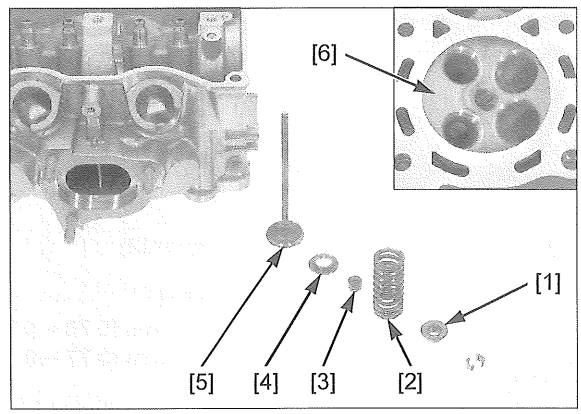

NOTE:

- Mark all parts during disassembly so they can be placed back in their original locations.

Remove carbon deposits from the combustion chamber [6].

INSPECTION

Inspect the following parts for damage, abnormal wear, deformation, burning or clogs in oil passages.

- Cylinder head
- Valve springs
- Valves
- Valve guides

Measure each part and clearance according to CYLINDER HEAD/VALVES SPECIFICATIONS (page 1-6).

Replace any part if it is out of service limit.

NOTE:

- Ream the valve guide using the valve guide reamer to remove any carbon build up before measuring the guide (page 10-16).
- Refer to valve seat inspection (page 10-16).

CAM CHAIN GUIDE

Check the cam chain guide [1] for wear or damage.

Replace the cam chain guide if necessary.

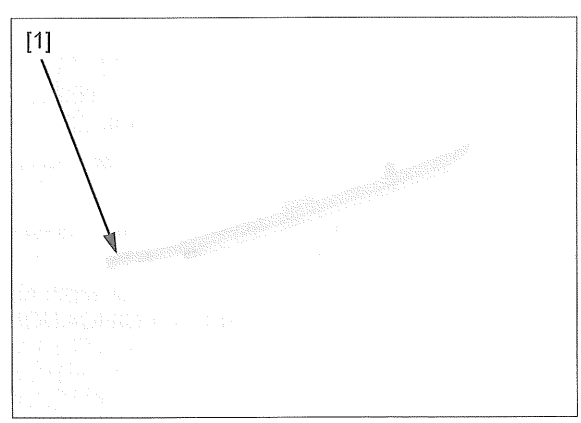

VALVE GUIDE REPLACEMENT

Disassemble the cylinder head (page 10-14).

Chill the replacement valve guides in the freezer section of a refrigerator for about an hour.

Heat the cylinder head to 100 – 150°C (212 – 302°F) with a hot plate or oven.

NOTE:

- To avoid burns, wear heavy gloves when handling the heated cylinder head.
- Do not use a torch to heat the cylinder head; it may cause warping.

Support the cylinder head and drive out the valve guides from combustion chamber side of the cylinder head.

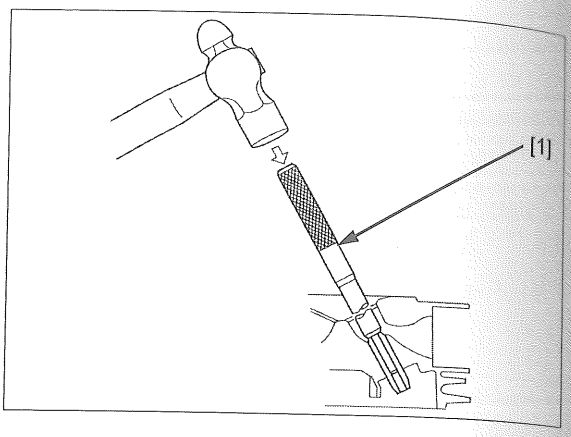

TOOL:
Valve guide driver 5.0 x 9.4 mm [1] 07942-8920000

Drive in the valve guides [1] to the specified depth from the top of the cylinder head.

TOOL:
Valve guide driver [2] 07743-0020000

SPECIFIED DEPTH:
IN: 17.7 – 18.0 mm (0.70 – 0.71 in)
EX: 19.6 – 19.9 mm (0.77 – 0.78 in)

Let the cylinder head cool to room temperature.

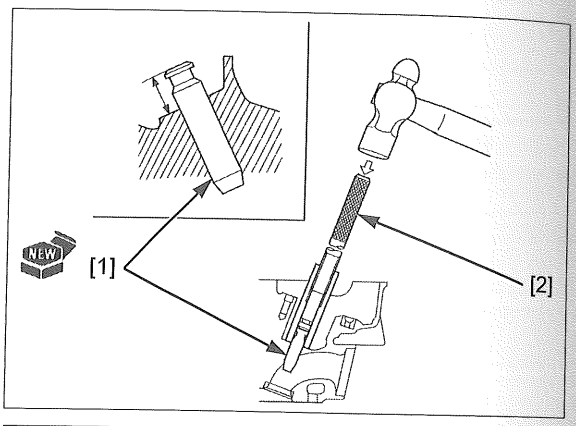

Insert the reamer [1] from the combustion chamber side.

TOOL:
Valve guide reamer, 5.010 mm 07984-MA60001

NOTE:

- Always rotate the reamer clockwise
- Use cutting oil on the reamer during this operation.
- Do not tilt the reamer during this operation.

Clean the cylinder head thoroughly to remove any metal particles.

Reface the valve seat (page 10-16).

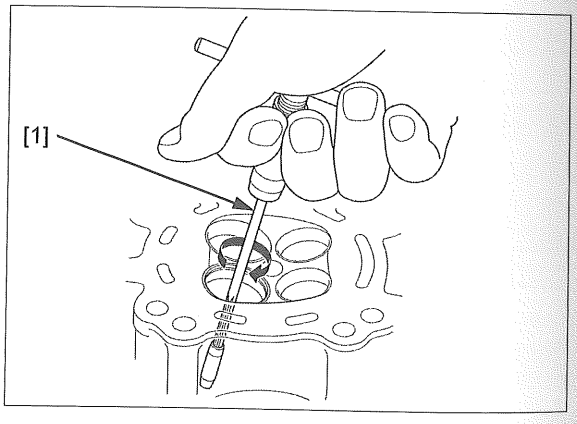

VALVE SEAT INSPECTION/REFACING

INSPECTION

Disassemble the cylinder head (page 10-14).

Clean the intake and exhaust valves thoroughly to remove carbon deposits.

Apply a light coating of Prussian Blue to the valve seats.

Tap the valves and seats using a rubber hose or other hand-lapping tool [1].

Measure the valve seat width according to CYLINDER HEAD/VALVES SPECIFICATIONS (page 1-6).

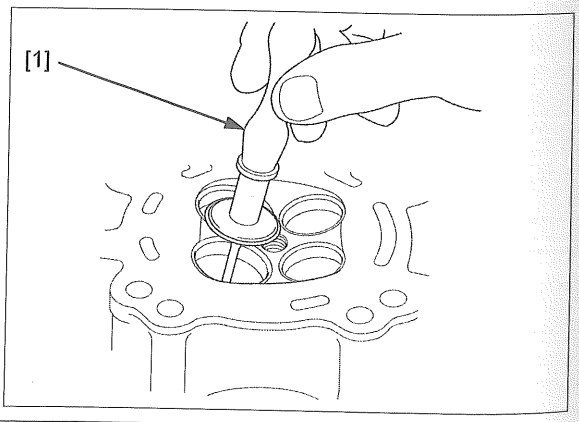

Reface the valve seat in the following cases:

- Valve seat contact area is too low or too high
- Valve seat contact surface is not center
- Damaged valve seat contact face

If the contact surface of the valve seat is abnormal, the valve is tilted, inspect the valve stem-to-valve guide clearance (page 1-6).

If the valve stem-to-valve guide clearance are normal, replace the valve guide (page 10-16).

REFACING

Inspect the valve seat (page 10-16).

Reface the valve seat using the following tools.

TOOLS:

Cutter holder, 5.0 mm	**07781-0010400**
Seat cutter, 27.5 mm (45° IN)	**07780-0010200**
Seat cutter, 24 mm (45° EX)	**07780-0010600**
Flat cutter, 28 mm (32° IN)	**07780-0012100**
Flat cutter, 25 mm (32° EX)	**07780-0012000**
Interior cutter, 26 mm (60° IN)	**07780-0014500**
Interior cutter, 22 mm (60° EX)	**07780-0014202**

STANDARD:

IN: 0.90 – 1.10 mm (0.035 – 0.043 in)
EX: 1.30 – 1.50 mm (0.051 – 0.059 in)

SERVICE LIMITS:

IN: 1.5 mm (0.06 in)
EX: 1.9 mm (0.07 in)

NOTE:

- Follow the refacer manufacturer's operating instructions.
- Use engine oil on the cutters during this operation.
- Be careful not to grind the seat more than necessary.

1. Use a 45° seat cutter, remove any roughness or irregularities from the seat.
2. Use a 32° flat cutter, remove the top 1/4 of the existing valve seat material.
3. Use a 60° interior cutter, remove the bottom 1/4 of the existing valve seat material.
4. Using a 45° seat cutter, cut the seat to the proper width.
5. After cutting the seat, apply lapping compound to the valve face, and lap the valve using light pressure.

NOTE:

- Excessive lapping pressure may deform or damage the seat.
- Change the angle of hand lapping tool [1] frequently to prevent uneven seat wear.
- Do not allow lapping compound to enter the guides.

After lapping, wash any residual compound off the cylinder head and valve and recheck the seat contact.

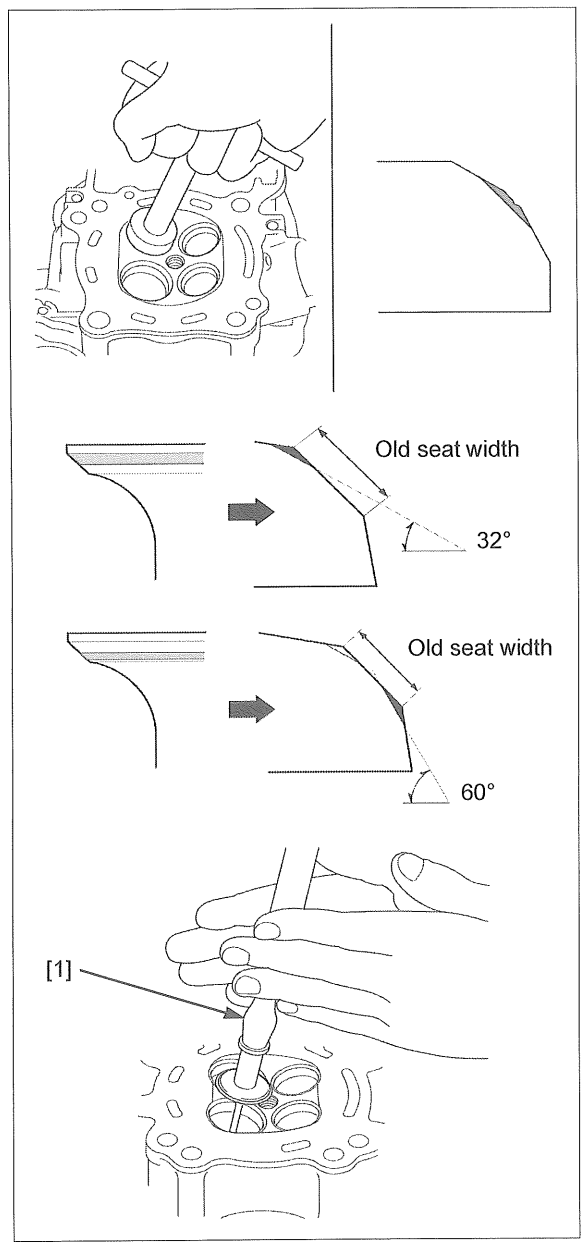

ASSEMBLY

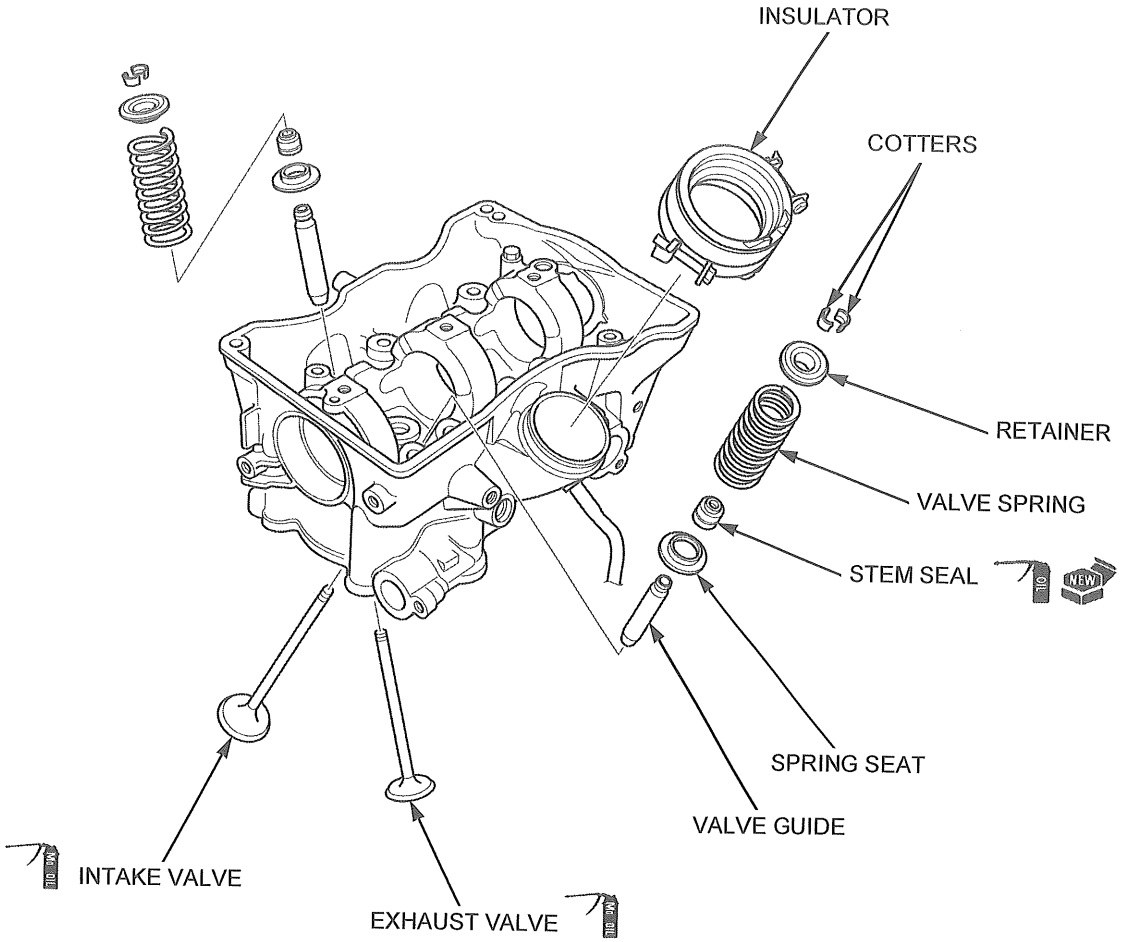

Install the valve spring seat [1].

Apply engine oil to the inside of new stem seal [2].

Install the stem seal.

Apply molybdenum oil solution to the valve stem sliding surface and stem end.

Insert the valve [3] into the valve guide.

NOTE:

- While installing the valve, it turning slowly to avoid damage to the stem seal.

Install the valve spring [4].

NOTE:

- The tightly wound coils facing the combustion chamber.

Install the valve spring retainer [5].

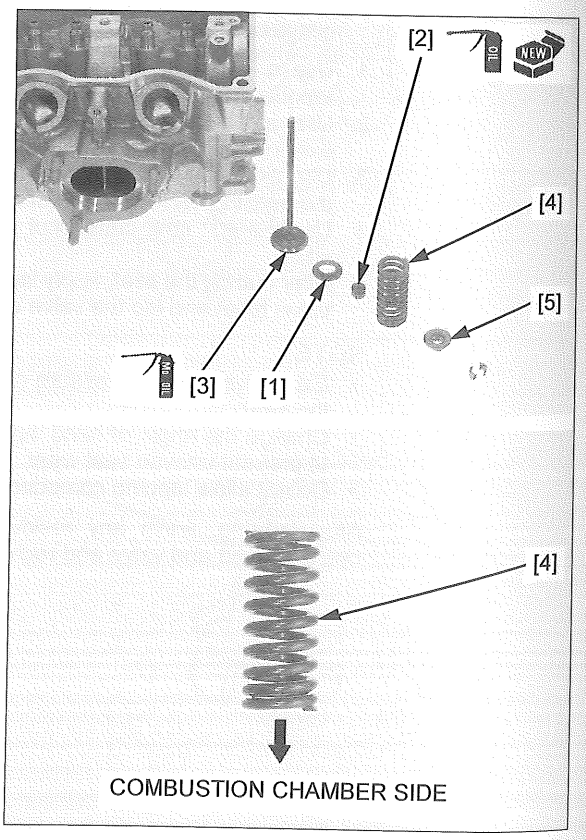

Install the valve cotters [1] using the special tool as shown.

TOOL:

Valve spring compressor [2]	**07757-0010000**
Valve spring compressor attachment [3]	**07959-KM30101**

NOTE:

- To prevent loss of tension, do not compress the valve spring more than necessary.

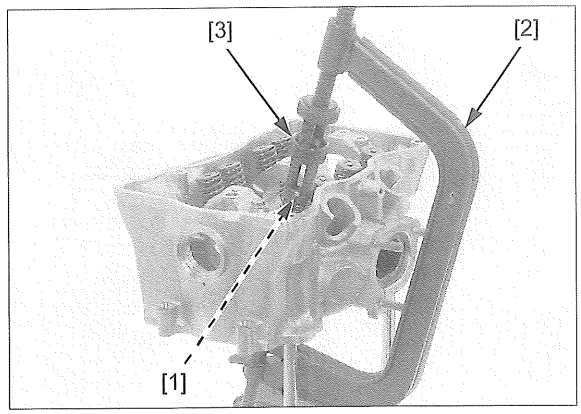

Tap the valve stems gently with hammer and shaft as shown to seat the cotters firmly.

NOTE:

- Support the cylinder head above the work bench surface to prevent possible valve damage.

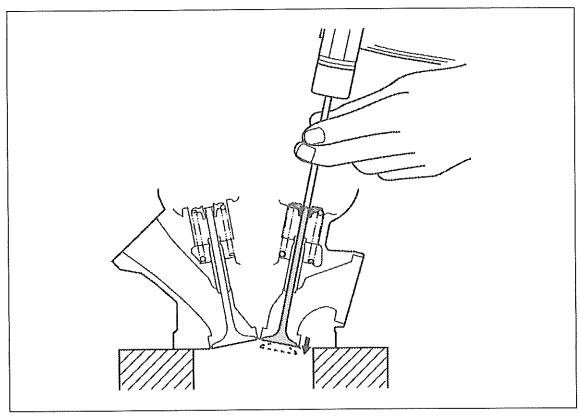

Install the insulator [1] to the cylinder head.

NOTE:

- Align the insulator slit with cylinder head tab.

Tighten the band screw [2] to the specified range.

Install the following:

- Camshaft (page 10-11)
- Fuel injector (page 7-14)
- Spark plug (page 3-6)
- Cylinder head (page 10-19)

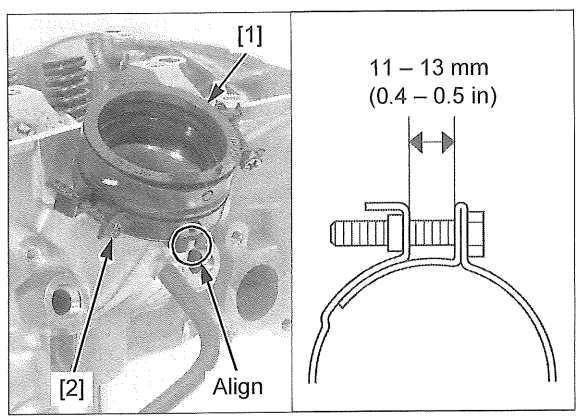

INSTALLATION

Install the partition plate [1] to the No.1 cylinder intake side.

NOTE:

- Install the partition plate with the projection [2] side facing down.

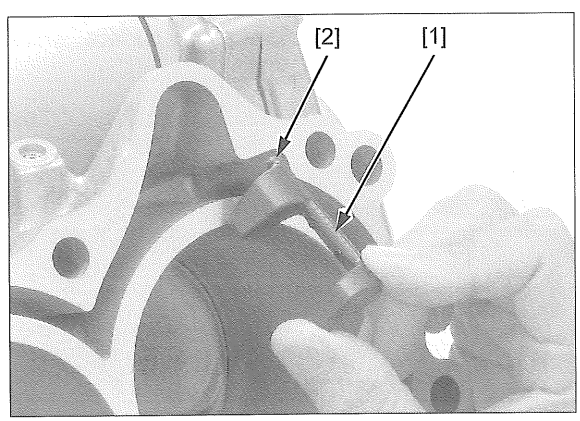

Install the cam chain guide [1].

NOTE:

- Align the cam chain guide end with the groove in the crankcase.
- Align the cam chain guide locating bosses with the grooves in the cylinder.

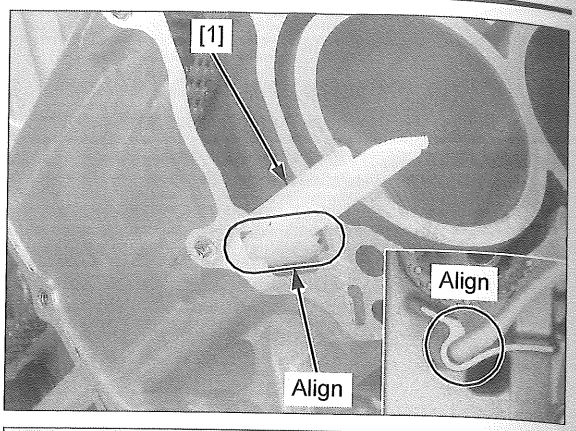

Install the dowel pins [1] and new gasket [2].

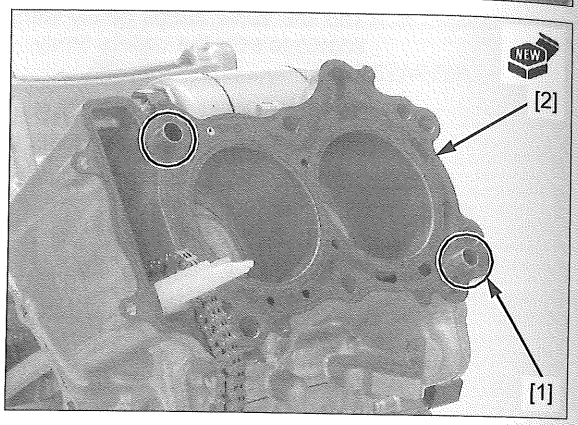

Route the cam chain through the cylinder head and install the cylinder head [1] onto the cylinder.

Apply molybdenum oil solution to the threads and seating surface of the cylinder head special bolts [2].

Install the special bolts and tighten them in a crisscross pattern in 2 or 3 steps to the specified torque.

TORQUE: 44 N·m (4.5 kgf·m, 32 lbf·ft)

Install and tighten the 6 mm bolts [3].

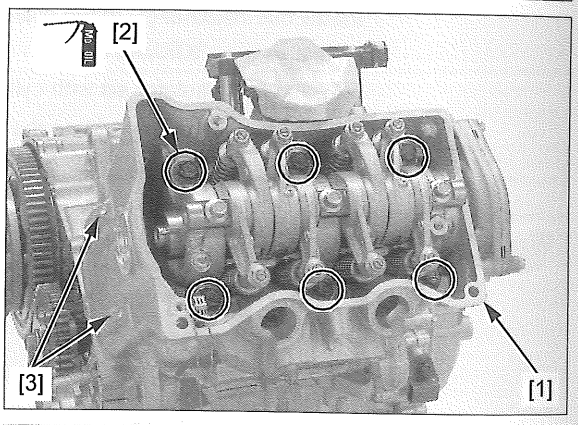

Turn the crankshaft clockwise by turning the primary drive gear bolt [1] and align the index lines [2] with the crankcase mating surface, while the "TOP" mark [3] is facing down.

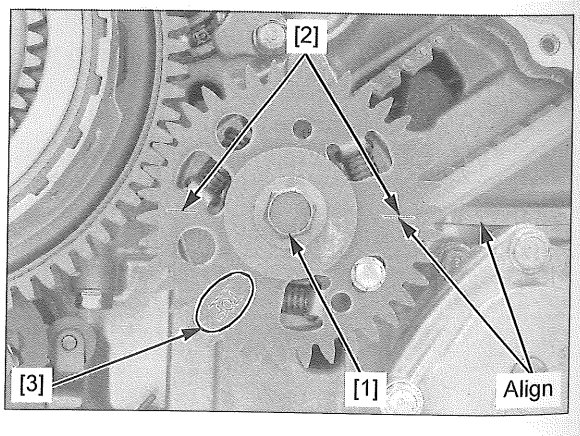

Align the "△" mark on the cam sprocket [1] with the lower index line on the cylinder head and install the cam chain [2] onto the cam sprocket.

Install the cam sprocket onto the camshaft by aligning the groove with the pin.

NOTE:

- Do not turn the crankshaft.

Apply engine oil to the threads and seating surface of the cam sprocket bolt/washer [3].

Install the cam sprocket bolt/washer.

Install the gear holder [4] between the primary drive gear and driven gear.

TOOL:

Gear holder, 2.5	**07724-0010100**

Tighten the cam sprocket bolt to the specified torque.

TORQUE: 56 N·m (5.7 kgf·m, 41 lbf·ft)

Remove the gear holder.

Install the following:

– Cam chain tensioner (page 10-8)
– Camshaft maintenance cap (page 3-7)
– Cylinder head cover (page 10-4)
– Right crankcase cover (page 11-43)
– Engine (page 15-9)

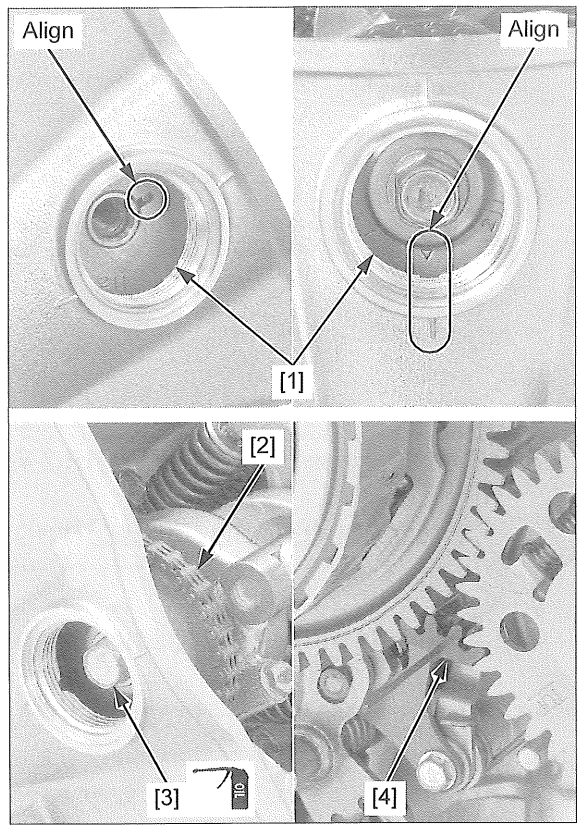

11. DUAL CLUTCH TRANSMISSION (DCT)

SERVICE INFORMATION 11-2

DCT SYMPTOM TROUBLESHOOTING ... 11-3

COMPONENT LOCATION 11-4

DCT ELECTRICAL SYSTEM LOCATION 11-5

DCT SYSTEM DIAGRAM 11-6

DCT TROUBLESHOOTING INFORMATION 11-7

DTC INDEX 11-9

DCT DTC TROUBLESHOOTING 11-11

A/M SWITCH TROUBLESHOOTING 11-37

RIGHT CRANKCASE COVER 11-38

DUAL CLUTCH 11-46

PRIMARY DRIVE GEAR 11-50

SHIFT CONTROL MOTOR/REDUCTION GEARS 11-52

GEARSHIFT LINKAGE 11-54

MAINSHAFT SENSOR 11-57

TR SENSOR 11-58

SHIFT SPINDLE ANGLE SENSOR 11-59

CLUTCH EOP SENSOR 11-60

EOT SENSOR 11-60

NEUTRAL SWITCH 11-61

TCM 11-61

CLUTCH INITIALIZE LEARNING (TCM) 11-62

SERVICE INFORMATION

GENERAL

- This section covers service of the electrical and mechanical systems of the Dual Clutch Transmission (DCT).
- A faulty DCT system is often related to poorly connected or corroded connectors. Check those connections before proceeding.
- Read the "DCT Troubleshooting Information" carefully, and inspect and troubleshoot the DCT system according to the DTC. Observe each step of the procedures one by one. Note the DTC and probable faulty part before starting diagnosis and troubleshooting.
- The TCM may be damaged if dropped. Also, if a connector is disconnected when current is flowing, the excessive voltage may damage the TCM. Always turn off the ignition switch before servicing.
- If the TCM and/or clutch assembly are replaced, perform the Clutch Initialize Learning Procedure (page 11-62).
- The drive mode AT or MT are changed electrically with the A/M mode switch.
- Be sure to use the recommended tires, and the specified drive and driven sprocket to operate the dual clutch transmission system normally.
- For oil pump service (page 9-4)
- For VS sensor service (page 4-57)
- For left handlebar switch service (page 21-17)
- For right handlebar switch service (page 21-17)
- The following color codes are used throughout this section.

Be = Beige	Bl = Black	Br = Brown	Bu = Blue	G = Green	Gr = Gray	Lb = Light blue
Lg = Light green	O = Orange	P = Pink	R = Red	V = Violet	W = White	Y = Yellow

For DCT System Troubleshooting

- The DCT system is controlled by the TCM and ECM. Therefore, some detection items are shared in the PGM-FI and DCT systems, and they may affect the operation of both systems.
- Before starting any troubleshooting, check the following items and refer to the appropriate troubleshooting.
  - Mil lighting or DTC for the PGM-FI system (page 4-6).
  - Shift indicator blinking for the DCT system (page 11-8)
  - Symptom of the DCT system operation (page 11-3)
- Refer to the "PGM-FI Troubleshooting Information" for the "CIRCUIT INSPECTION" information (page 4-8).
- The gearshift mechanism included the following items. If the gearshift mechanism is faulty, refer to each component service.
  - Shift control motor/reduction gears (page 11-52)
  - Gearshift linkage (page 11-54)
  - Shift drum/shift fork (page 13-5)

Shift Control Motor Function Procedures

NOTE:

- If the system has a DTC, the function test does not work.
- The function test is not for the quality check of the shift control motor.

Conduct a test of the shift control motor when the following items have been serviced or replaced.

- Shift control motor
- Reduction gears
- TR sensor
- Shift spindle angle sensor

Connect the MCS (page 4-5), and perform the shift control motor function test.

Linear Solenoid Valve Function Procedures

NOTE:

- If the system has a DTC, the function test does not work.
- The function test is not for the quality check of the linear solenoid valve.
- Do not open the throttle while testing the linear solenoid valve function.

Conduct a test of the linear solenoid valves when the linear solenoid valves have been serviced or replaced.

Connect the MCS (page 4-5), and perform the linear solenoid valve function test.

DCT SYMPTOM TROUBLESHOOTING

Check the shift indicator "–" blinking of the combination meter (page 11-7).

If the shift indicator "–" is blinking, refer to the DTC index (page 11-9) and begin the appropriate troubleshooting procedure.

If there are no "–" blinking, inspect the engine oil condition and follow the symptom troubleshooting described below.

CLUTCH SLIPS AND MOTORCYCLE DOES NOT ACCELERATE

Check the clutch clearance (page 11-47).

EXCESSIVE NOISE OR VIBRATION AROUND THE DCT SYSTEM

Inspect the following:

- Clutch clearance
- Dual clutch needle bearings for wear or damage
- Primary drive/sub-gear for wear or damage
- Primary driven gear for wear or damage
- Each fastener is tightened to the correct torque value

Replace the damaged components if necessary and tighten the loose fasteners to the specified torque.

COMPONENT LOCATION

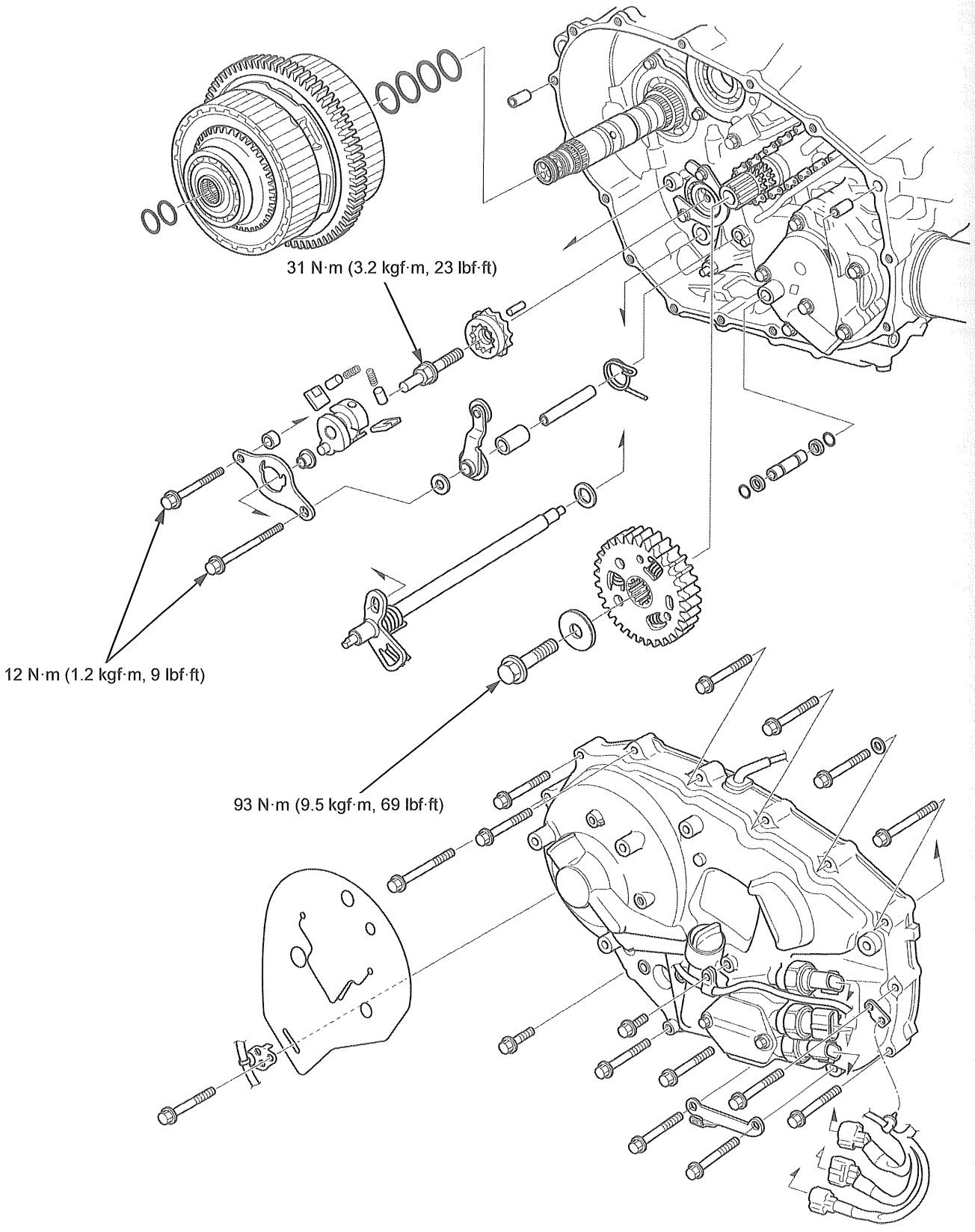

DCT ELECTRICAL SYSTEM LOCATION

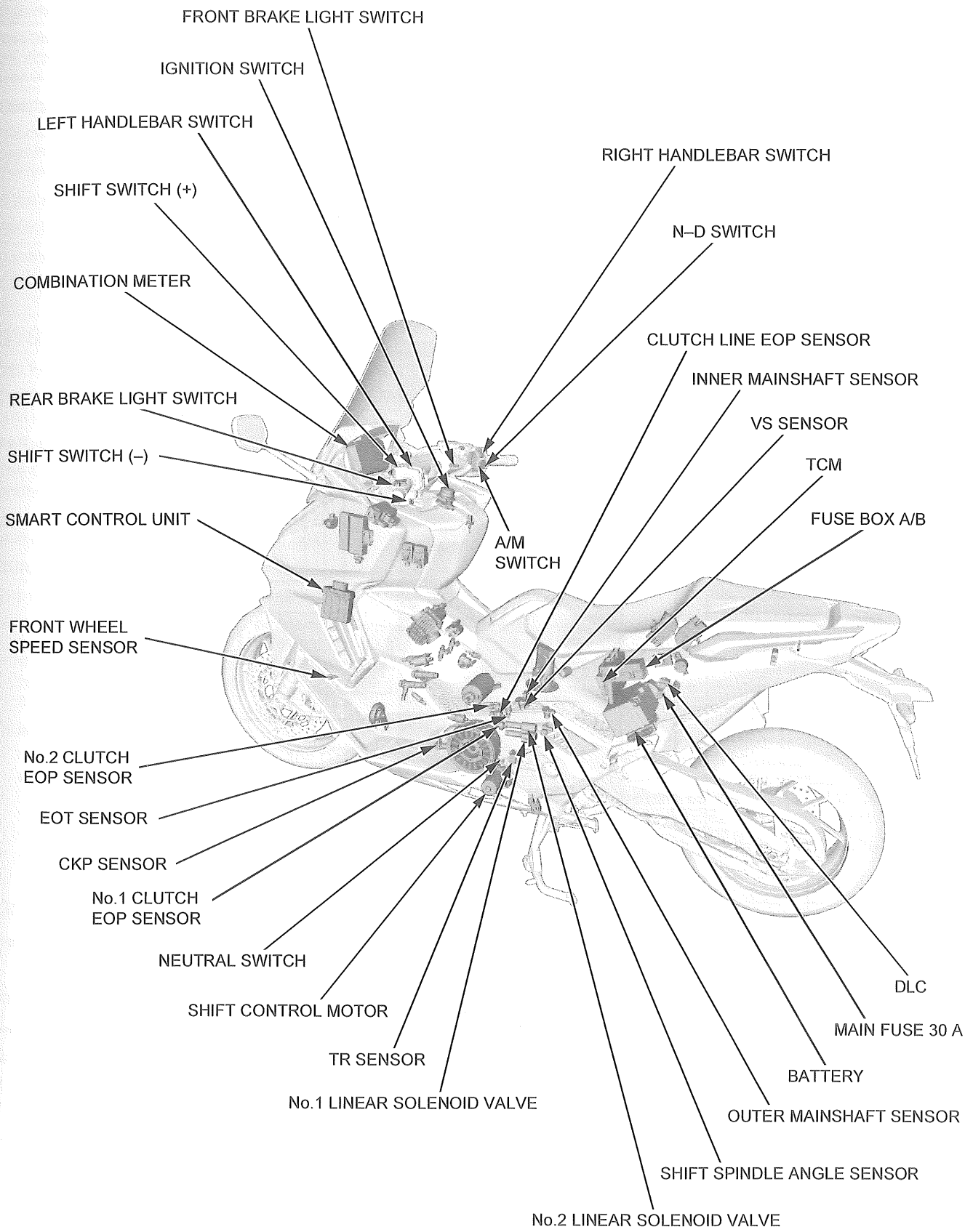

DCT SYSTEM DIAGRAM

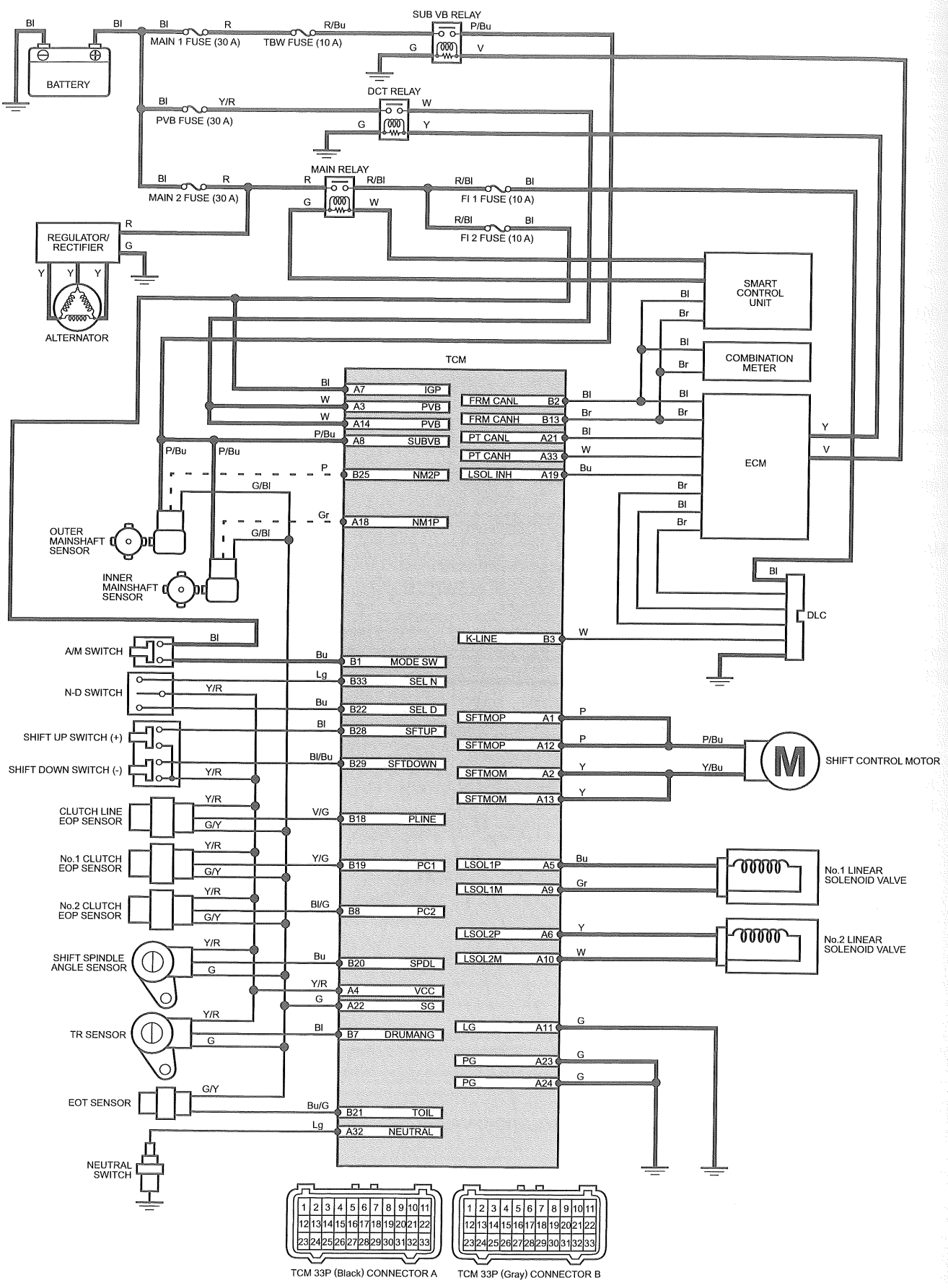

DCT TROUBLESHOOTING INFORMATION

GENERAL TROUBLESHOOTING

Intermittent Failure

The term "intermittent failure" means a system may have had a failure, but it checks OK now. If the shift indicator "–" does not come on, check for poor contact or loose pins at all connectors related to the circuit that you are troubleshooting. If the shift indicator "–" was on, but then went out, the original problem may be intermittent.

Opens and Shorts

"Opens" and "Shorts" are common electrical terms. An open is a break in a wire or at a connection. A short is an accidental connection of a wire to ground or to another wire. In simple electronics, this usually means something will not work at all. With TCM this can sometimes mean something works, but not the way it's supposed to.

If the shift indicator "–" has come on

Refer to DTC READOUT (page 11-8).

If the shift indicator "–" did not stay on

If the shift indicator "–" did not stay on, but there is a driveability problem, do the SYMPTOM TROUBLESHOOTING (page 11-3).

SYSTEM DESCRIPTION

SELF-DIAGNOSIS SYSTEM

The DCT system is equipped with the self-diagnostic system. When any abnormality occurs in the DCT system, the TCM have the shift indicator blinking "–" and stores a DTC in its erasable memory for the relevant system failure.

FAIL-SAFE FUNCTION

The DCT system is provided with a fail-safe function to secure a minimum running capability even when there is trouble in the system.

When the TCM detects a problem in the DCT system, the TCM stops the gearshift function, and hold the gear position. Also, the shift indicator blinks "–" to indicate the DTC.

CURRENT DTC/STORED DTC

The DTC is indicated in two ways according to the failure status.

- If the TCM detects a current problem, the shift indicator "–" will blink and begin to blink as its DTC when the sidestand is lowered. The shift indicator "–" blink pattern will indicate the current DTC.
- If the TCM does not detect any current problem but has a problem stored in its memory, the shift indicator "–" will not light and blink. If it is necessary to retrieve the past problem, readout the stored DTC by following the DTC readout procedure (page 11-8).

Shift indicator "–" Blink Pattern

- If the MCS or GST is not available, the DTC can be read from the TCM memory by the shift indicator "–" blink pattern (page 11-8).
- The shift indicator "–" has two types of blinks, a long blink and short blink. The long blinking lasts for 1.2 seconds, the short blinking lasts for 0.4 seconds. One long blink is the equivalent of ten short blinks. For example, when three long blinks are followed by seven short blinks, the DTC is 37 (three long blinks = 30 blinks, plus seven short blinks).
- When there isn't a DTC, the shift indicator "–" lights for 2 seconds at intervals of 3 seconds.

GST (General Scan Tool) INFORMATION

Refer to the PGM-FI system (page 4-6).

MCS INFORMATION

Refer to the PGM-FI system (page 4-6).

NOTE:

- The front wheel speed sensor signal can be disabled with the MCS for testing. Never ride the motorcycle with the TCM in this mode.

DTC READOUT

NOTE:

- If the shift indicator blinks, check the MIL stays on. If the MIL stays on, there is any problem in the PGM-FI system, troubleshoot it first. Then recheck the DCT system after erasing the PGM-FI DTC.
- After performing diagnostic troubleshooting, erase the DTC(s) (page 11-8) and test-ride the motorcycle to be sure that the problem(s) have been removed.

Read the DTC and stored data with the MCS or GST, and follow the troubleshooting index (page 11-9).

To read the DTC without the MCS or GST, use the following procedure.

Reading DTC with the shift indicator "–"

1. Turn the ignition switch OFF.
2. Connect the SCS short connector to the DLC (page 4-7).
3. While pushing the shift switch (+) [1], turn the ignition switch ON.

   Read and note the shift indicator "–" blinks and refer to the troubleshooting index (page 11-9).

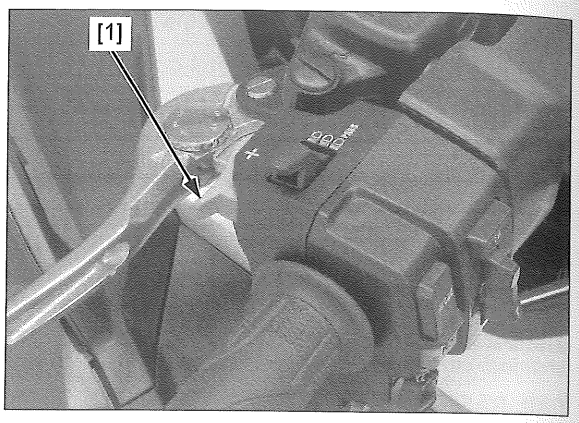

NOTE:

- If the TCM has no DTC in its memory, the shift indicator "–" will start blinking (page 11-7).

4. Release the shift switch (+).

ERASING DTC

Connect the MCS or GST to the DLC.

– Connecting MCS: page 4-6
– Connecting GST: page 4-6

Erase the DTC with the MCS or GST while the engine is stopped.

To erase the DTC without MCS or GST, refer to the following procedure.

How to erase the DTC without MCS or GST

1. Erase the DTC.

   Refer to the PGM-FI system (page 4-8).

2. The DTC is erased if the shift indicator "–" goes off and starts blinking as shown.

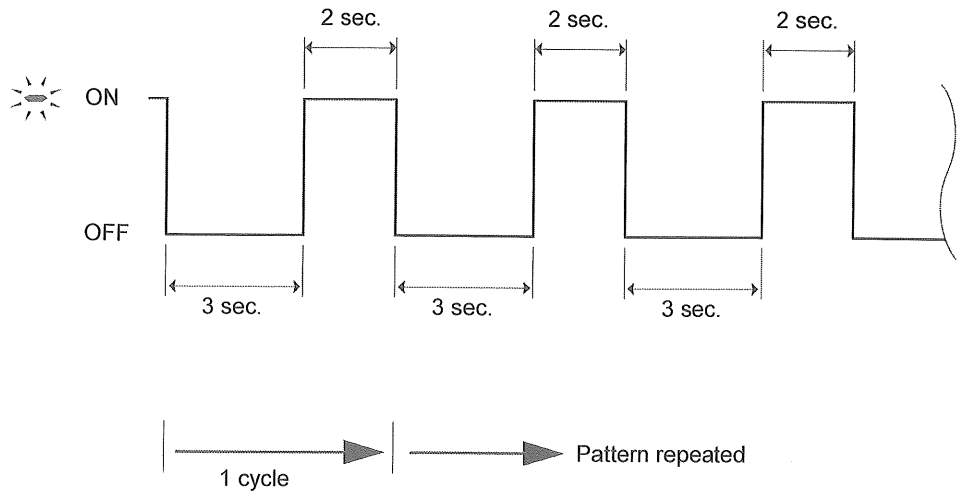

NOTE:

- Note that the DTC cannot be erased if the ignition switch is turned to "OFF" before the shift indicator "–" starts blinking.

3. Turn the ignition switch OFF.
4. Remove the special tool from the DLC.

DTC INDEX

- If GST or MCS is not used, perform all of the inspection of the shift indicator blinking.
- About Diagnostic Trouble Codes other than in this DTC INDEX, refer to PGM-FI SYSTEM DTC INDEX (page 4-10).
- Follow the prior diagnosis notes before performing the troubleshooting, refer to the PRIOR DIAGNOSIS (page 11-11).

DTC	Shift indicator blinks	Detected D/C (Driving Cycle)	Function failure	Refer to page
P0197	44	–	EOT Sensor Circuit Low (EOT sensor low voltage)	11-12
P0198	44	–	EOT Sensor Circuit High (EOT sensor high voltage)	
P0501	67	1	Vehicle Speed Sensor Range Performance Error (Front wheel pulser ring malfunction)	11-13
P0523	87	1	EOP Sensor High (EOP switch circuit high voltage)	11-13
P0606	84	1	Control Module Processor (CPU in the ECM malfunction)	4-36
P0687	37	1	ECM/PCM Power Relay Control Circuit High (SUB VB relay malfunction)	11-14
P0715	53	–	Input Speed Sensor 1 Circuit (Inner mainshaft sensor speed low)	11-14
P0721	11	1	Output Speed Sensor Range Performance Error (VS sensor circuit no signal)	11-15
P0722	11	1	OS Sensor Circuit No Signal (VS sensor no signal)	4-37
P0745	55	1	Pressure Control Solenoid Malfunction (No.1 linear solenoid valve current failure)	11-16
	55	1	Pressure Control Solenoid Malfunction (No.1 linear solenoid valve driver in the TCM failure)	
P0775	56	1	Pressure Control Solenoid 2 Malfunction (No.2 linear solenoid valve current failure)	11-17
	56	1	Pressure Control Solenoid 2 Malfunction (No.2 linear solenoid valve driver in the TCM failure)	
P0851	52	–	Park/Neutral Switch Input Circuit Low (Neutral switch stuck OFF)	11-18
P0852	52	–	Park/Neutral Switch Input Circuit High (Neutral switch stuck ON)	
P1700	71	1	In Main/Countershaft SP Ratio Failure (Inner mainshaft/countershaft speed ratio failure)	11-19
P1701	72	1	Outer Main/Countershaft SP Ratio Failure (Outer mainshaft/countershaft speed ratio failure)	
P1702	51	1	GP Sensor/TR Sensor Circuit Low (TR sensor low voltage)	11-19
P1703	51	1	GP Sensor/TR Sensor Circuit High (TR sensor high voltage)	
P1704	47	1	No.1 Clutch EOP Sensor Low Voltage	11-21
P1705	47	1	No.1 Clutch EOP Sensor High Voltage	
P1706	48	1	No.2 Clutch EOP Sensor Low Voltage	
P1707	48	1	No.2 Clutch EOP Sensor High Voltage	
P1708	21	1	Shift Spindle Angle Sensor Low Voltage	11-22
P1709	21	1	Shift Spindle Angle Sensor High Voltage	
P170A	24	1	Shift Control Motor Drive Circuit	11-23
P170B	31	1	Shift Control Motor Low Voltage	
P170F	33	1	Learning Value Area Malfunction (TCM EEPRPM malfunction)	11-24
P1712	84	1	TCM CPU Malfunction (CPU malfunction in the TCM)	4-42
P1713	22	1	Spindle Operation During Shifter Stop (Shift spindle operation malfunction (after operating gearshift mechanism))	11-25
P1714	27	1	Shift Drum Position Malfunction	11-26

DTC	Shift indicator blinks	Detected D/C (Driving Cycle)	Function failure	Refer to page
P1716	9	–	Clutch Line Pressure High Voltage (Clutch line EOP sensor low voltage)	11-27
P1717	9	–	Clutch Line Pressure Low Voltage (Clutch line EOP sensor high voltage)	
P1718	49	–	Shift Control Motor Drive Circuit (Clutch line low oil pressure)	11-28
P1719	68	1	Clutch (1) Being Dysversion Malfunction (No.1 clutch operation malfunction (clutch slips))	11-28
P171A	69	1	Clutch (2) Being Dysversion Malfunction (No.2 clutch operation malfunction (clutch slips))	11-29
P171B	58	–	Clutch Bite Crowed (Clutch 1 No Opening) (No.1 clutch does not disengage (when shifting gear))	11-29
P171C	59	–	Clutch Bite Crowed (Clutch 2 No Opening) (No.2 clutch does not disengage (when shifting gear))	
P171D	61	–	Clutch Bite Crowed (1) Pressure No Opening (No.1 clutch oil pressure canceling malfunction)	11-30
P171E	61	1	Clutch (1) Hydraulic Pressure Malfunction (No.1 clutch oil pressure malfunction (at clutch initial diagnosis))	
P171F	61	1	Clutch (1) No Pressure (No.1 clutch no oil pressure)	
P1720	61	1	Clutch (1) Hydraulic Pressure Low (No.1 clutch oil pressure degradation)	
P1721	62	–	Clutch (1) Hydraulic Pressure Rise (No.1 clutch oil pressure high)	
P1722	63	–	Clutch Bite Crowed (2) Pressure No Opening (No.2 clutch oil pressure canceling malfunction)	11-30
P1723	63	1	Clutch (2) Hydraulic Pressure Malfunction (No.2 clutch oil pressure malfunction (at clutch initial diagnosis))	
P1724	63	1	Clutch (2) No Pressure (No.2 clutch no oil pressure)	
P1725	63	1	Clutch (2) Hydraulic Pressure Low (No.2 clutch oil pressure degradation)	
P1726	64	–	Clutch (2) Hydraulic Pressure Rise (No.2 clutch oil pressure high)	
P1728	57	1	Shifter Malfunction (Gearshift mechanism malfunction)	11-30
P1729	57	1	Shifter Setting Malfunction (Gear position malfunction (jumps out of gear))	
P172C	46	–	N-D Switch Signal Malfunction (N-D switch malfunction)	11-31
P172D	45	–	Shifter Driven in Spindle Inactive (Shift switch malfunction)	11-32
P172E	32	1	FSR Malfunction (DCT relay circuit malfunction)	11-33
P172F	23	1	Spindle No Operation During Shifter Drive (Shift spindle operation malfunction (while operating gearshift mechanism))	11-35
P2765	54	1	Input Speed Sensor 2 Circuit (Outer mainshaft sensor speed low)	11-35

DCT DTC TROUBLESHOOTING

PRIOR DIAGNOSIS

Before processing the DTC troubleshooting, check as follows:

- Check for loose or poor contact on the DTC related connectors (each sensor, solenoid, unit etc.), then recheck the DTC.
- Erase the DTC (page 11-8) and recheck it.
- Refer to probable cause of each detected DTC and check the listed items first. If possible, correct the abnormality.

NOTE:

- Always turn the ignition switch OFF when checking the continuity of the circuit and before disconnecting the connectors.
- Some DTCs have a recheck function, so that the priority DTC is detected when the ignition switch is switched from OFF to ON. Wait for 10 seconds and check the DTC again.

COMMON TROUBLESHOOTING INFORMATION

NOTE:

- Always use the test probe when inspecting at the TCM and ECM connectors.

TOOL:
Test probe **07ZAJ-RDJA110**

- If the TCM or clutch assembly is replaced, perform the Clutch Initialize Learning Procedure (page 11-62).
- When performing the test ride in the procedure of the troubleshooting, set the motorcycle to the preferred value as below chart. Conduct a test ride with your confirmation.

Motorcycle speed*:	**About 60 km/h (37 mph)**
Running time:	**1 minute or more**
Engine revolution:	**4,000 – 7,500 r/min**
Throttle opening angle:	**14 degrees or more**

If the test ride cannot be performed, replace parts that may be abnormal.

DTC P0197/P0198

Probable cause:

- Faulty EOT sensor or its related circuit
- Faulty TCM

Symptom/Fail-safe function:

- Gearshift function works normally

1. **EOT Sensor Output Line Open Circuit Inspection**

   Disconnect the TCM 33P (Gray) connector (page 4-55).
   Disconnect the EOT sensor 2P connector (page 11-60).
   Check for continuity between the wire harness side 2P connector [1] and 33P (Gray) connector [2].
   CONNECTION: Blue/green – B21

   Is there continuity?

   YES – GO TO STEP 2.

   NO – Open circuit in the Blue/green wire

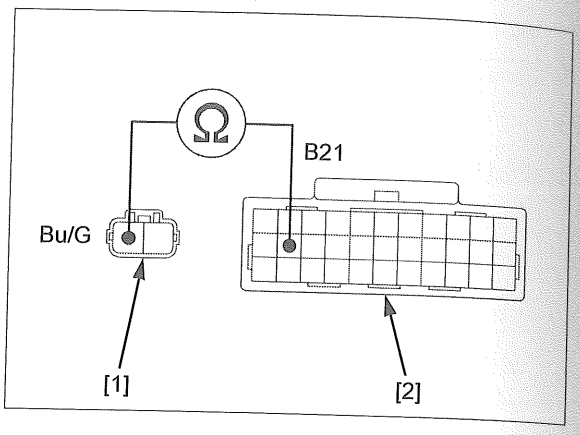

2. **EOT Sensor Ground Line Open Circuit Inspection**

   Disconnect the TCM 33P (Black) connector (page 4-55).
   Check for continuity between the wire harness side 2P connector [1] and 33P (Black) connector [2].
   CONNECTION: Green/yellow – A22

   Is there continuity?

   YES – GO TO STEP 3.

   NO – Open circuit in the Green/yellow or Green wire

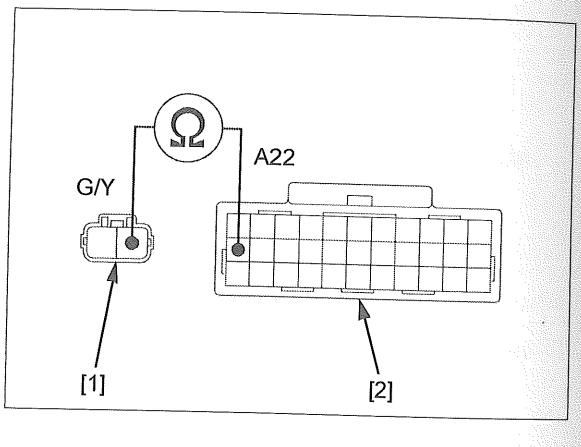

3. **EOT Sensor Output Line Short Circuit Inspection**

   Check for continuity between the wire harness side 2P connector [1] and ground.
   CONNECTION: Blue/green – Ground

   Is there continuity?

   YES – Short circuit in the Blue/green wire

   NO – GO TO STEP 4.

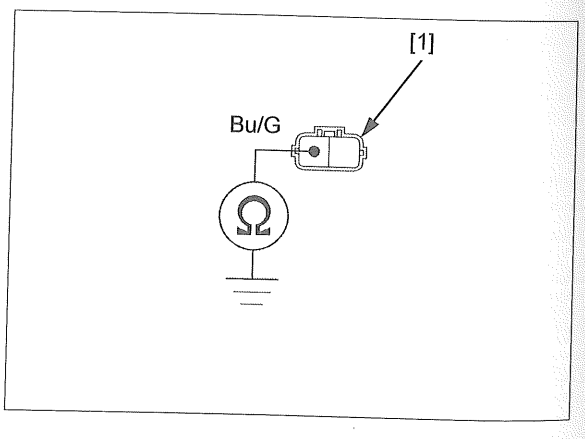

4. **EOT Sensor Inspection**

   Replace the EOT sensor with a new one (page 11-60).
   Connect the disconnected connector(s).
   Erase the DTC (page 11-8).
   Turn the ignition switch ON and wait for 10 seconds.
   Check the DTC with MCS.

   Is same DTC indicated?

   YES – Replace the TCM with a new one (page 4-55), and recheck.

   NO – Faulty original EOT sensor

DTC P0501

Probable cause:

- Faulty front wheel pulser ring
- Contaminated front wheel pulser ring (iron or other magnetic deposits)
- Faulty front wheel speed sensor or its related circuit
- ABS modulator has DTC
- Faulty ECM

Symptom/Fail-safe function:

- Gearshift function does not work

Refer to DTC P0500 troubleshooting (page 4-33).

DTC P0523

Probable cause:

- Faulty EOP switch or its related circuit
- Faulty TCM

Symptom/Fail-safe function:

- Engine operates at idle speed

1. **EOP Switch Inspection**

   Replace the EOP switch with a new one (page 21-14).
   Erase the DTC (page 11-8).
   Check the DTC with GST or MCS.

   Is same DTC indicated?

   YES – Replace the TCM with a new one (page 4-55), and recheck.

   NO – Faulty original EOP switch

DTC P0687

Probable cause:

- Faulty SUB VB relay or its related circuits
- Faulty TCM
- Faulty ECM

Symptom/Fail-safe function:

- Gearshift function does not work
- Engine does not operate

NOTE:

- When the DTC P0562, P0686, or P0687 for the PGM-FI system is displayed, troubleshoot it first (page 4-34).

1. TCM Sub Power Voltage Inspection

Disconnect the TCM 33P (Black) connector (page 4-55).
Temporarily install the ignition switch.
Turn the ignition switch ON.
Measure the voltage between the wire harness side 33P (Black) connector [1] and ground.

CONNECTION: A8 (+) – Ground (–)

Is there battery voltage?

YES – Replace the TCM with a new one (page 4-55), and recheck.

NO – Open circuit in the Pink/blue wire

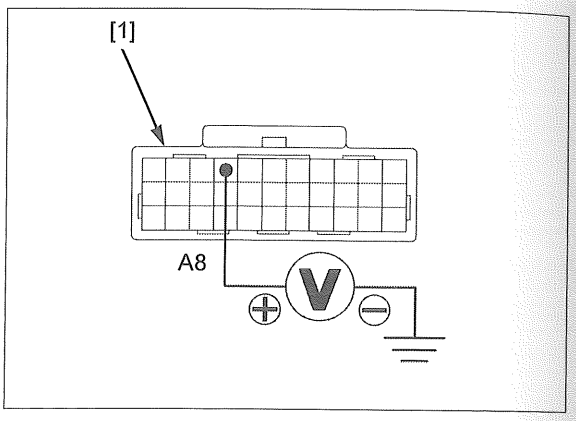

DTC P0715

Probable cause:

- Electromagnetic interference
- Faulty inner mainshaft sensor or its related circuit
- Faulty TCM

Symptom/Fail-safe function:

- Gearshift function does not work

NOTE:

- When the DTC P0562 or P0686 for the PGM-FI system is displayed, troubleshoot it first (page 4-34).

1. Inner Mainshaft Sensor Input Voltage Inspection

Disconnect the inner mainshaft sensor 3P connector (page 11-57).
Temporarily install the ignition switch, starter relay switch and battery.
Turn the ignition switch ON.
Measure the voltage at the wire harness side 3P connector [1].

CONNECTION: Pink/blue (+) – Green/black (–)

Is there about battery voltage?

YES – GO TO STEP 2.

NO –
- Open circuit in the Pink/blue wire
- Open circuit in the Green/black or Green wire

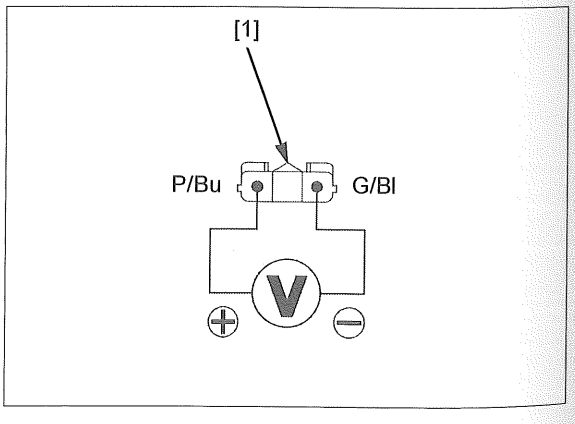

2. **Inner Mainshaft Sensor Output Line Open Circuit Inspection**

Turn the ignition switch OFF.
Disconnect the TCM 33P (Black) connector (page 4-55).
Check for continuity between the wire harness side 3P connector [1] and 33P (Black) connector [2].

CONNECTION: Gray – A18

Is there continuity?

YES – GO TO STEP 3.

NO – Open circuit in the Gray wire

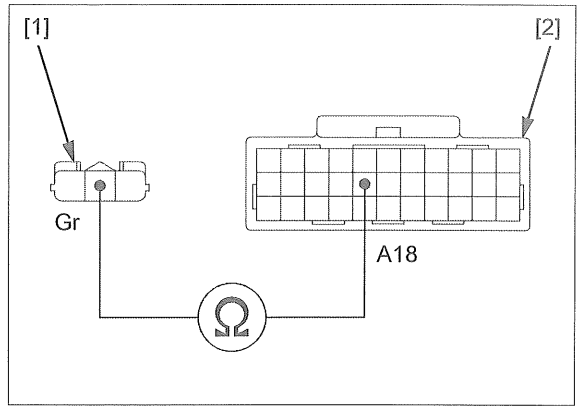

3. **Inner Mainshaft Sensor Output Line Short Circuit Inspection**

Check for continuity between the wire harness side 3P connector [1] and ground.

CONNECTION: Gray – Ground

Is there continuity?

YES – Short circuit in the Gray wire

NO – GO TO STEP 4.

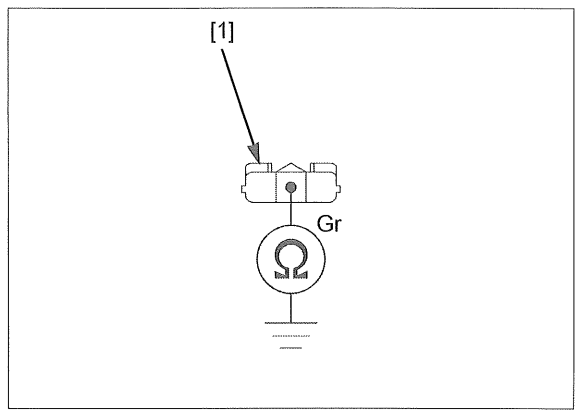

4. **Inner Mainshaft Sensor Inspection**

Replace the inner mainshaft sensor with a new one (page 11-57).
Connect the disconnected connector(s).
Erase the DTC (page 11-8).
Check the DTC with GST or MCS.

Is same DTC indicated?

YES – Replace the TCM with a new one (page 4-55), and recheck.

NO – Faulty original inner mainshaft sensor

DTC P0721

Probable cause:

- Faulty VS sensor
- Faulty ECM

Symptom/Fail-safe function:

- Gearshift function does not work

Refer to DTC P0722 troubleshooting (page 4-37).

DTC P0745

Probable cause:

- Faulty No.1 linear solenoid valve or its related circuit
- Faulty TCM

Symptom/Fail-safe function:

- Gearshift function does not work

1. **No.1 Linear Solenoid Valve Line Open Circuit Inspection**

   Disconnect the TCM 33P (Black) connector (page 4-55).
   Disconnect the liner solenoid valve 4P connector (page 11-38).
   Check for continuity between the wire harness side 4P connector [1] and 33P (Black) connector [2].

   CONNECTION:
   Blue – A5
   Gray – A9

   Is there continuity?

   YES – GO TO STEP 2.

   NO – • Open circuit in the Blue wire
   • Open circuit in the Gray wire

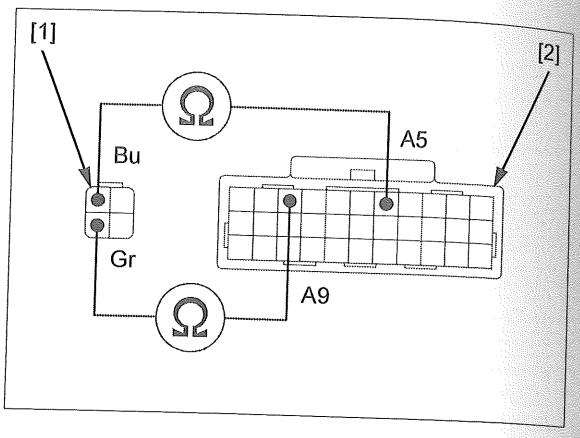

2. **No.1 Linear Solenoid Valve Line Short Circuit Inspection**

   Check for continuity between the wire harness side 4P connector [1] and ground.

   CONNECTION:
   Blue – Ground
   Gray – Ground

   Is there continuity?

   YES – • Short circuit in the Blue wire
   • Short circuit in the Gray wire

   NO – GO TO STEP 3.

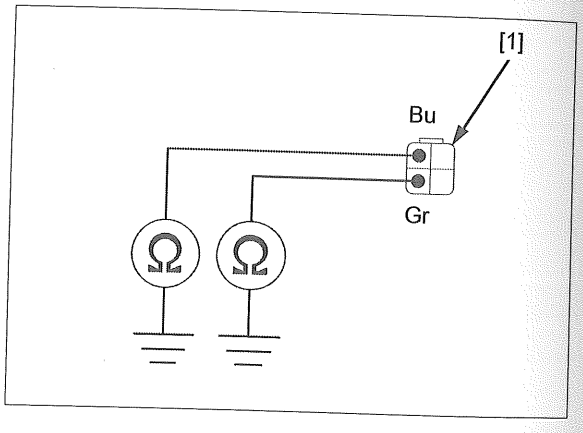

3. **No.1 Linear Solenoid Valve Inspection**

   Replace the linear solenoid valve with a new one (page 11-38).
   Connect the disconnected connector(s).
   Erase the DTC (page 11-8).
   Turn the ignition switch ON and wait for 10 seconds.
   Start the engine and wait for 10 seconds.
   Check the DTC with GST or MCS.

   Is same DTC indicated?

   YES – Replace the TCM with a new one (page 4-55), and recheck.

   NO – Faulty original No.1 linear solenoid valve

DTC P0775

Probable cause:

- Faulty No.2 linear solenoid valve or its related circuit
- Faulty TCM

Symptom/Fail-safe function:

- Gearshift function does not work

1. **No.2 Linear Solenoid Valve Line Open Circuit Inspection**

   Disconnect the TCM 33P (Black) connector (page 4-55).
   Disconnect the liner solenoid valve 4P connector (page 11-38).
   Check for continuity between the wire harness side 4P connector [1] and 33P (Black) connector [2].

   CONNECTION:
   Yellow – A6
   White – A10

   Is there continuity?

   YES – GO TO STEP 2.

   NO – • Open circuit in the Yellow wire
   • Open circuit in the White wire

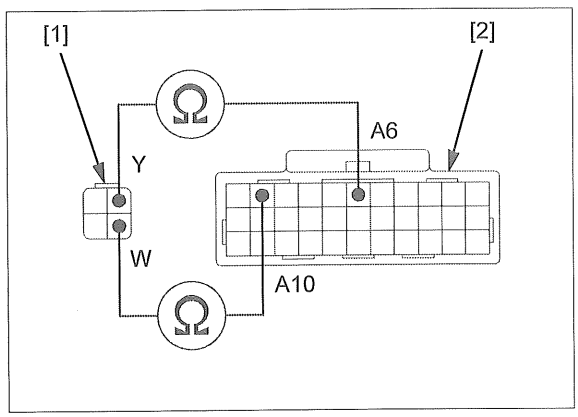

2. **No.2 Linear Solenoid Valve Line Short Circuit Inspection**

   Check for continuity between the wire harness side 4P connector [1] and ground.

   CONNECTION:
   Yellow – Ground
   White – Ground

   Is there continuity?

   YES – • Short circuit in the Yellow wire
   • Short circuit in the White wire

   NO – GO TO STEP 3.

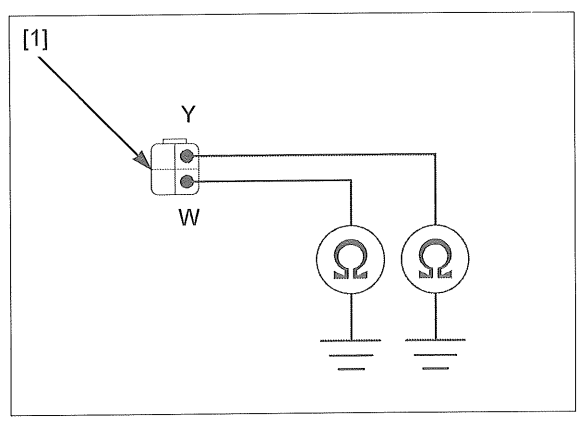

3. **No.2 Linear Solenoid Valve Inspection**

   Replace the linear solenoid valve with a new one (page 11-38).
   Connect the disconnected connector(s).
   Erase the DTC (page 11-8).
   Turn the ignition switch ON and wait for 10 seconds.
   Start the engine and wait for 10 seconds.
   Check the DTC with GST or MCS.

   Is same DTC indicated?

   YES – Replace the TCM with a new one (page 4-55), and recheck.

   NO – Faulty original No.2 linear solenoid valve

DTC P0851/P0852

Probable cause:

- Faulty neutral switch or its related circuit
- Faulty TCM

Symptom/Fail-safe function:

- Gearshift function does not work

1. **Neutral Switch Line Open Circuit Inspection**

   Disconnect the TCM 33P (Black) connector (page 4-55).
   Disconnect the neutral switch connector (page 11-61).
   Check for continuity between the wire harness side 33P (Black) connector [1] and neutral switch connector [2].

   CONNECTION: A32 – Light green

   Is there continuity?

   YES – GO TO STEP 2.

   NO – Open circuit in the Light green wire

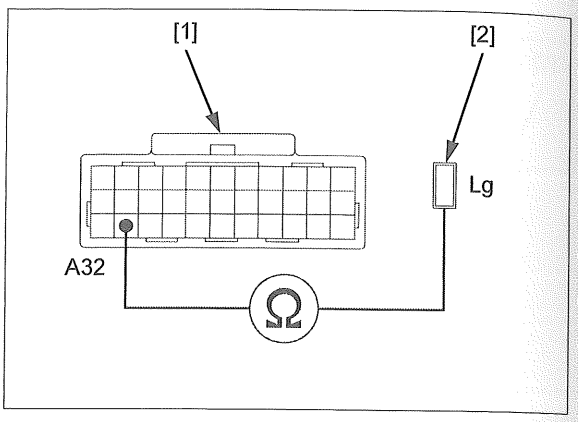

2. **Neutral Switch Line Short Circuit Inspection**

   Check for continuity between the neutral switch connector and ground.

   CONNECTION: Light green – Ground

   Is there continuity?

   YES – Short circuit in the Light green wire

   NO – GO TO STEP 3.

3. **Neutral Switch Inspection**

   Replace the neutral switch with a new one (page 11-61).
   Connect the disconnected connector(s).
   Erase the DTC (page 11-8).
   Turn the ignition switch ON.
   Shift the gearshift 1st position and wait for 10 seconds.
   Recheck the DTC with MCS.

   Is same DTC indicated?

   YES – Replace the TCM with a new one (page 4-55), and recheck.

   NO – Faulty original neutral switch

DTC P1700/P1701

Probable cause:

- Faulty VS sensor or its related circuit
- Faulty inner mainshaft sensor or its related circuit
- Faulty outer mainshaft sensor or its related circuit
- Faulty TCM

Symptom/Fail-safe function:

- Gearshift function does not work

NOTE:

- When other DTC is displayed together with P1700/P1701, troubleshoot it first.

1. **DTC Recheck**

   Erase the DTC (page 11-8).
   Drive the motorcycle as follows:

   – P1700: Drive the motorcycle for a minute in each gear at 1st, 3rd and 5th gear.
   – P1701: Drive the motorcycle for a minute in each gear at 2nd, 4th and 6th gear.

   Check the DTC with GST or MCS.

   Is same DTC indicated?

   YES – Replace the TCM with a new one (page 4-55), and recheck.

   NO – Intermittent failure

DTC P1702/P1703

Probable cause:

- Faulty TR sensor or its related circuit
- Faulty TCM

Symptom/Fail-safe function:

- Engine operates normally
- Gearshift function does not work

1. **TR Sensor Input Voltage Inspection**

   Disconnect the TR sensor 4P connector (page 11-58).
   Temporarily install the ignition switch.
   Turn the ignition switch ON.
   Measure the voltage at the wire harness side 4P connector [1].

   CONNECTION: Yellow/red (+) – Green (–)

   Is the voltage within 4.75 – 5.25 V?

   YES – GO TO STEP 2.

   NO – • Open circuit in the Yellow/red wire
   • Open circuit in the Green wire
   • If the wires are OK, replace the TCM with a new one (page 4-55), and recheck.

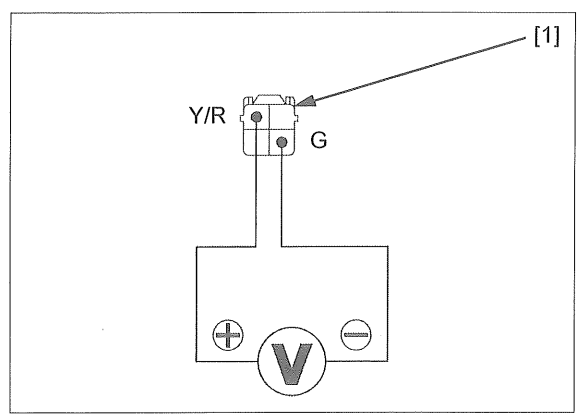

2. **TR Sensor Output Line Open Circuit Inspection**

Turn the ignition switch OFF.
Disconnect the TCM 33P (Gray) connector (page 4-55).
Check for continuity between the wire harness side 4P connector [1] and 33P (Gray) connector [2].

CONNECTION: Black – B7

Is there continuity?

YES – GO TO STEP 3.

NO – Open circuit in the Black wire

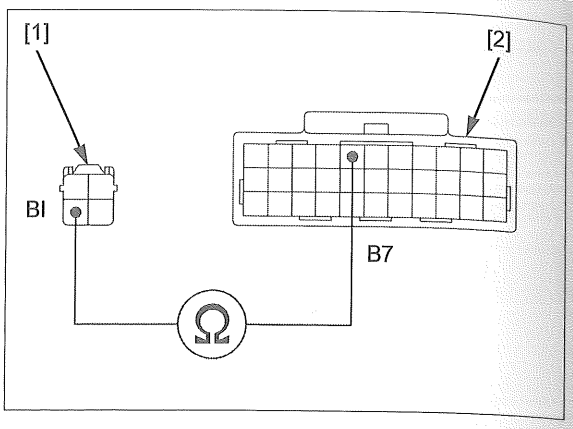

3. **TR Sensor Output Line Short Circuit Inspection**

Check for continuity between the wire harness side 4P connector [1] and ground.

CONNECTION: White – Ground

Is there continuity?

YES – Short circuit in the Black wire

NO – GO TO STEP 4.

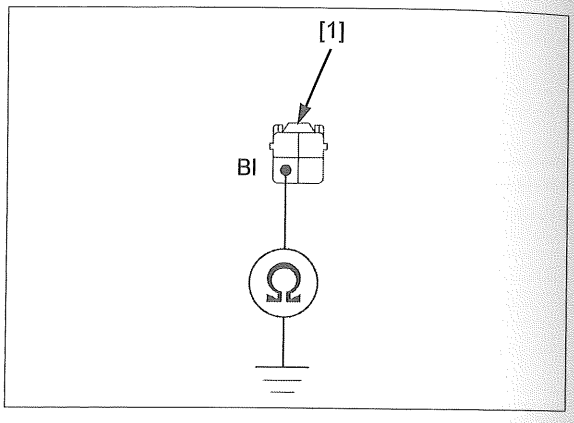

4. **TR Sensor Inspection**

Replace the TR sensor with a new one (page 11-58).
Connect the disconnected connector(s).
Erase the DTC (page 11-8).
Turn the ignition switch ON and wait for 10 seconds.
Check the DTC with GST or MCS.

Is same DTC indicated?

YES – Replace the TCM with a new one (page 4-55), and recheck.

NO – Faulty original TR sensor

DTC P1704/P1705/P1706/P1707

Probable cause:

- Faulty No.1/No.2 clutch EOP sensor or its related circuit
- Faulty TCM

Symptom/Fail-safe function:

- Gearshift function does not work

1. Clutch EOP Sensor Input Voltage Inspection

Disconnect the clutch EOP sensor 3P connector (page 11-60).
Temporarily install the ignition switch.
Turn the ignition switch ON.
Measure the voltage at the wire harness side 3P connector [1].

CONNECTION: Yellow/red (+) – Green/yellow (–)

Is the voltage within 4.75 – 5.25 V?

YES – GO TO STEP 2.

NO –
- Open circuit in the Yellow/red wire
- Open circuit in the Green/yellow or Green wire
- If the wires are OK, replace the TCM with a new one (page 4-55), and recheck.

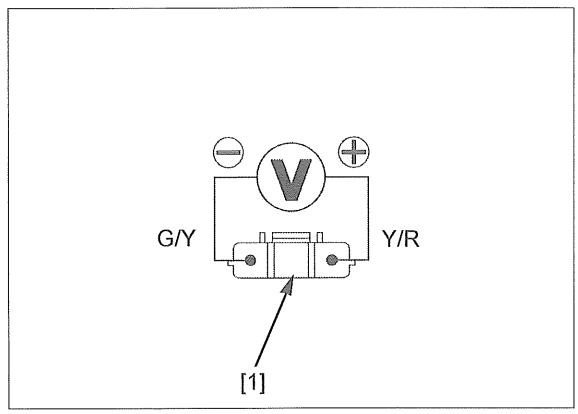

2. Clutch EOP Sensor Output Line Open Circuit Inspection

Turn the ignition switch OFF.
Disconnect the TCM 33P (Gray) connector (page 4-55).
Check for continuity between the wire harness side 3P connector [1] and 33P (Gray) connector [2].

CONNECTION:
No.1 clutch EOP sensor:
Yellow/green – B19
No.2 clutch EOP sensor:
Black/green – B8

Is there continuity?

YES – GO TO STEP 3.

NO –
- Open circuit in the Yellow/green wire
- Open circuit in the Black/green wire

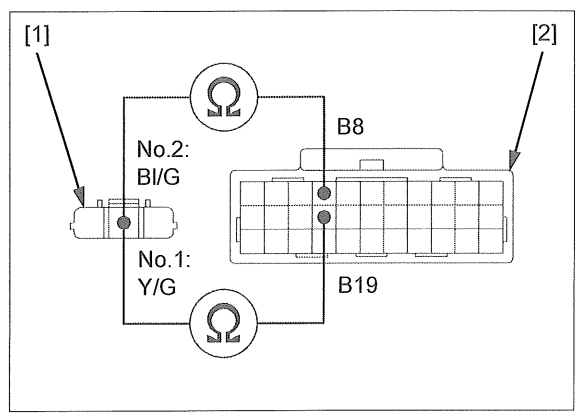

3. Clutch EOP Sensor Output Line Short Circuit Inspection

Check for continuity between the wire harness side 3P connector [1] and ground.

CONNECTION:
No.1 clutch EOP sensor:
Yellow/green – Ground
No.2 clutch EOP sensor:
Black/green – Ground

Is there continuity?

YES –
- Short circuit in the Yellow/green wire
- Short circuit in the Black/green wire

NO – GO TO STEP 4.

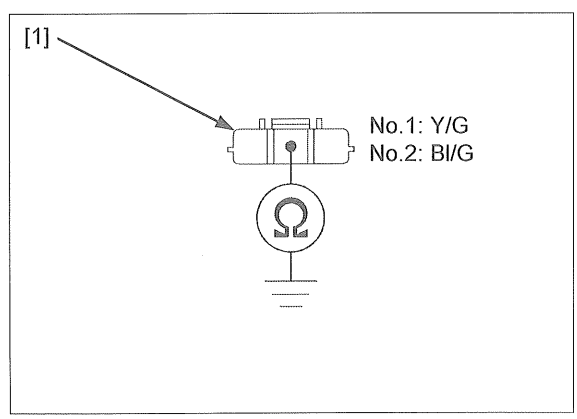

4. **Clutch EOP Sensor Inspection**

Replace the clutch EOP sensor with a new one (page 11-60).
Connect the disconnected connector(s).
Erase the DTC (page 11-8).
Turn the ignition switch ON and wait for 10 seconds.
Check the DTC with GST or MCS.

Is same DTC indicated?

YES – Replace the TCM with a new one (page 4-55), and recheck.

NO – Faulty original clutch EOP sensor

DTC P1708/P1709

Probable cause:

- Faulty shift spindle angle sensor or its related circuit
- Faulty TCM

Symptom/Fail-safe function:

- Gearshift function does not work

1. **Shift Spindle Angle Sensor Input Voltage Inspection**

Disconnect the shift spindle angle sensor 3P connector (page 11-59).
Temporarily install the ignition switch.
Turn the ignition switch ON.
Measure the voltage at the wire harness side 3P connector [1].

CONNECTION: Yellow/red (+) – Green (–)

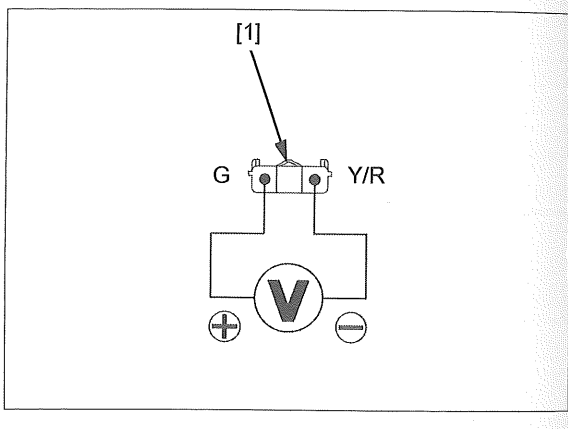

Is the voltage within 4.75 – 5.25 V?

YES – GO TO STEP 2.

NO – • Open circuit in the Yellow/red wire
• Open circuit in the Green or Green/yellow wire
• If the wires are OK, replace the TCM with a new one (page 4-55), and recheck.

2. **Shift Spindle Angle Sensor Output Line Open Circuit Inspection**

Turn the ignition switch OFF.
Disconnect the TCM 33P (Gray) connector (page 4-55).
Check for continuity between the wire harness side 3P connector [1] and 33P (Gray) connector [2].

CONNECTION: Blue – B20

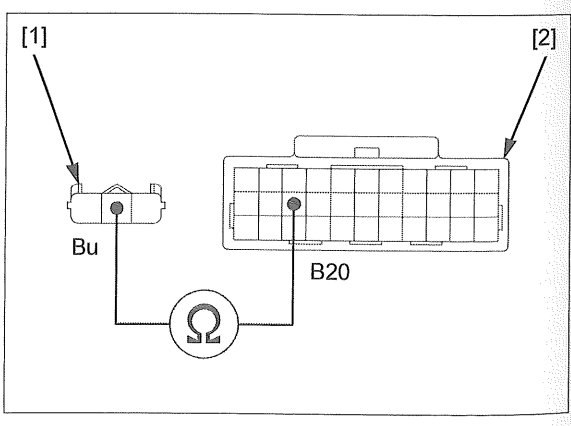

Is there continuity?

YES – GO TO STEP 3.

NO – Open circuit in the Blue wire

3. **Shift Spindle Angle Sensor Output Line Short Circuit Inspection**

Check for continuity between the wire harness side 3P connector [1] and ground.

CONNECTION: Blue – Ground

Is there continuity?

YES – Short circuit in the Blue wire

NO – GO TO STEP 4.

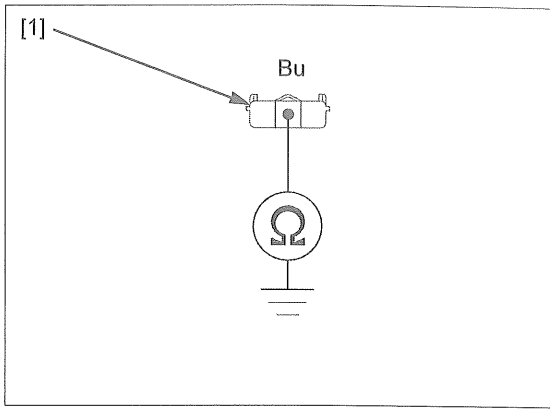

4. **Shift Spindle Angle Sensor Inspection**

Replace the shift spindle angle sensor with a new one (page 11-59).
Connect the disconnected connector(s).
Erase the DTC (page 11-8).
Turn the ignition switch ON and wait for 10 seconds.
Check the DTC with GST or MCS.

Is same DTC indicated?

YES – Replace the TCM with a new one (page 4-55), and recheck.

NO – Faulty original shift spindle angle sensor

DTC P170A/P170B

Probable cause:

- Faulty shift control motor or its related circuit
- Faulty TCM

Symptom/Fail-safe function:

- Gearshift function does not work

1. **Shift Control Motor Line Open Circuit Inspection**

Disconnect the following:

– TCM 33P (Black) connector (page 4-55)
– Shift control motor 2P connector (page 11-52)

Check for continuity between the wire harness side 2P connector [1] and 33P (Black) connector [2].

CONNECTION:
Pink/blue – A1
Pink/blue – A12
Yellow/blue – A2
Yellow/blue – A13

Is there continuity?

YES – GO TO STEP 2.

NO – • Open circuit in the Pink/blue or Pink wire
• Open circuit in the Yellow/blue or Yellow wire

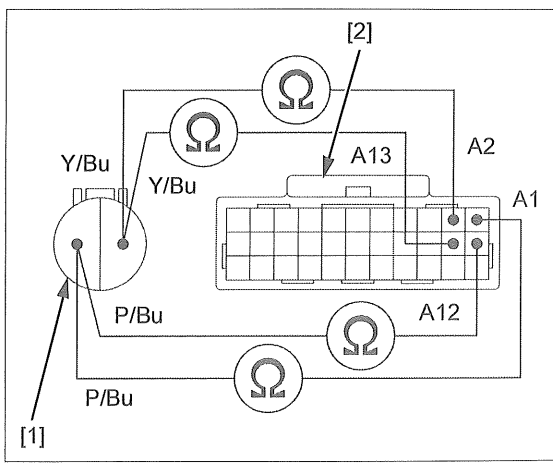

2. **Shift Control Motor Line Short Circuit Inspection**

Check for continuity between the wire harness side 2P connector [1] and ground.

CONNECTION:

Pink/blue – Ground

Yellow/blue – Ground

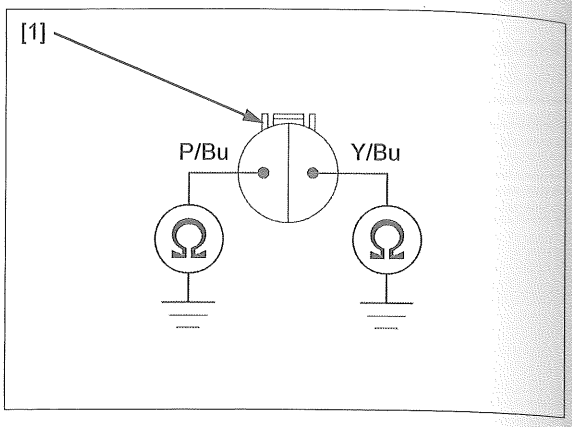

Is there continuity?

YES – • Short circuit in the Pink/blue or Pink wire
• Short circuit in the Yellow/blue or Yellow wire

NO – GO TO STEP 3.

3. **Shift Control Motor Inspection**

Replace the shift control motor with a new one (page 11-52).
Connect the disconnected connector(s).
Erase the DTC (page 11-8).
Turn the ignition switch ON and wait for 10 seconds.
Check the DTC with GST or MCS.

Is same DTC indicated?

YES – Replace the TCM with a new one (page 4-55), and recheck.

NO – Faulty original shift control motor

DTC P170F

Probable cause:

• Faulty TCM

Symptom/Fail-safe function:

• Gearshift system stops

1. **DTC Recheck**

Erase the DTC (page 11-8).
Turn the ignition switch ON and wait for 10 seconds.
Check the DTC with GST or MCS.

Is same DTC indicated?

YES – Replace the TCM with a new one (page 4-55), and recheck.

NO – Intermittent failure

DTC P1713

Probable cause:

- Faulty gearshift mechanism (reduction gears) (page 11-52)
- Faulty shift spindle angle sensor installation status (page 11-59)
- Faulty shift control motor
- Faulty shift spindle angle sensor
- Faulty TCM

Symptom/Fail-safe function:

- Gearshift function does not work

NOTE:

- When other DTC is displayed together with P1713, troubleshoot it first.

1. **Shift Control Motor Inspection**

   Remove the shift control motor (page 11-52).
   Connect a fully charged 12 V battery to the shift control motor 2P connector to check the motor operation.
   Reverse the battery connection to check the reverse operation.

   Does the shift control motor turn in both directions?

   YES – GO TO STEP 2.

   NO – Faulty shift control motor

2. **Shift Spindle Angle Sensor Inspection**

   Replace the shift spindle angle sensor with a new one (page 11-59).
   Erase the DTC (page 11-8).
   Drive the motorcycle for a minute in each gear from 1st to 6th, and then drive the motorcycle for a minute in each gear from 6th to 1st.
   Check the DTC with GST or MCS.

   Is same DTC indicated?

   YES – Replace the TCM with a new one (page 4-55), and recheck.

   NO – Faulty original shift spindle angle sensor

DTC P1714

Probable cause:

- Faulty gearshift mechanism (reduction gears) (page 11-52)
- Faulty TR sensor installation status (page 11-58)
- Faulty shift control motor
- Faulty TR sensor
- Faulty TCM

Symptom/Fail-safe function:

- Gearshift function does not work

NOTE:

- When other DTC is displayed together with P1714, troubleshoot it first.

1. **Shift Control Motor Inspection**

   Remove the shift control motor (page 11-52).
   Connect a fully charged 12 V battery to the shift control motor 2P connector to check the motor operation.
   Reverse the battery connection to check the reverse operation.

   Does the shift control motor turn in both directions?

   YES – GO TO STEP 2.

   NO – Faulty shift control motor

2. **TR Sensor Inspection**

   Replace the TR sensor with a new one (page 11-58).
   Erase the DTC (page 11-8).
   Drive the motorcycle for a minute in each gear from 1st to 6th, and then drive the motorcycle for a minute in each gear from 6th to 1st.
   Check the DTC with GST or MCS.

   Is same DTC indicated?

   YES – Replace the TCM with a new one (page 4-55), and recheck.

   NO – Faulty original TR sensor

DTC P1716/P1717

Probable cause:

- Faulty clutch line EOP sensor or its related circuit
- Faulty TCM

Symptom/Fail-safe function:

- Gearshift function does not work

1. **Clutch Line EOP Sensor Input Voltage Inspection**

   Disconnect the clutch line EOP sensor connector (page 11-60).
   Temporarily install the ignition switch.
   Turn the ignition switch ON.
   Measure the voltage at the wire harness side 3P connector [1].

   CONNECTION: Yellow/red (+) – Green/yellow (–)

   Is the voltage within 4.75 – 5.25 V?

   YES – GO TO STEP 2.

   NO – • Open circuit in the Yellow/red wire
   • Open circuit in the Green/yellow or Green wire
   • If the wires are OK, replace the TCM with a new one (page 4-55), and recheck.

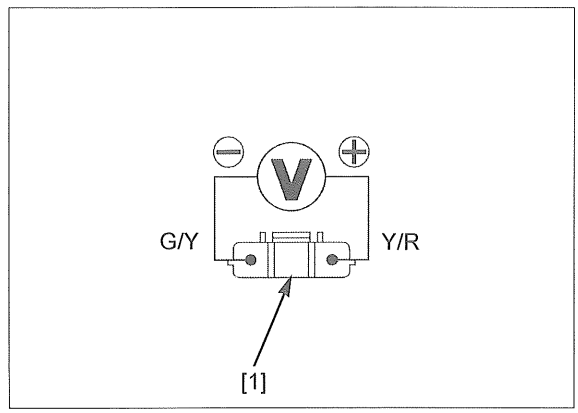

2. **Clutch Line EOP Sensor Output Line Open Circuit Inspection**

   Turn the ignition switch OFF.
   Disconnect the TCM 33P (Gray) connector (page 4-55).
   Check for continuity between the wire harness side 3P connector [1] and 33P (Gray) connector [2].

   CONNECTION: Violet/green – B18

   Is there continuity?

   YES – GO TO STEP 3.

   NO – Open circuit in the Violet/green wire

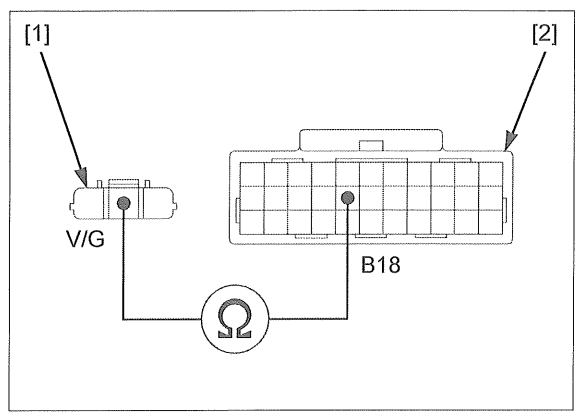

3. **Clutch Line EOP Sensor Output Line Short Circuit Inspection**

   Check for continuity between the wire harness side 3P connector [1] and ground.

   CONNECTION: Violet/green – Ground

   Is there continuity?

   YES – Short circuit in the Violet/green wire

   NO – GO TO STEP 4.

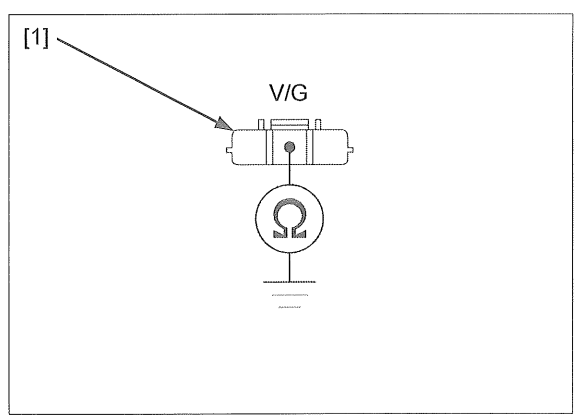

4. **Clutch Line EOP Sensor Inspection**

Replace the clutch line EOP sensor with a new one (page 11-60).
Connect the disconnected connector(s).
Erase the DTC (page 11-8).
Turn the ignition switch ON and wait for 10 seconds.
Check the DTC with MCS.

Is same DTC indicated?

YES – Replace the TCM with a new one (page 4-55), and recheck.

NO – Faulty original clutch line EOP sensor

DTC P1718

Probable cause:

- Engine oil level is low (page 3-9)
- Faulty oil pump (page 9-4)
- Faulty clutch oil filter (page 3-11)
- Faulty clutch oil circuit (page 11-38)
- Faulty clutch line EOP sensor
- Faulty TCM

Symptom/Fail-safe function:

- Gearshift function does not work

1. **Clutch Line EOP Sensor Inspection**

Replace the clutch line EOP sensor with a new one (page 11-60).
Erase the DTC (page 11-8).
Drive the motorcycle for a minute in each gear from 1st to 6th, and then drive the motorcycle for a minute in each gear from 6th to 1st.
Check the DTC with MCS.

Is same DTC indicated?

YES – Replace the TCM with a new one (page 4-55), and recheck.

NO – Faulty original clutch line EOP sensor

DTC P1719

Probable cause:

- Faulty VS sensor (page 4-57)
- Faulty No.1 clutch
- Faulty TCM

Symptom/Fail-safe function:

- Gearshift function does not work

1. **No.1 Clutch Inspection**

Replace the No.1 clutch assembly with a new one (page 11-46).
Erase the DTC (page 11-8).
Drive the motorcycle for a minute in each gear at 1st, 3rd and 5th gear.
Check the DTC with GST or MCS.

Is same DTC indicated?

YES – Replace the TCM with a new one (page 4-55), and recheck.

NO – Faulty original No.1 clutch assembly

DTC P171A

Probable cause:

- Faulty VS sensor (page 4-57)
- Faulty No.2 clutch
- Faulty TCM

Symptom/Fail-safe function:

- Gearshift function does not work

1. **No.2 Clutch Inspection**

   Replace the No.2 clutch assembly with a new one (page 11-46).
   Erase the DTC (page 11-8).
   Drive the motorcycle for a minute in each gear at 2nd, 4th and 6th gear.
   Check the DTC with GST or MCS.

   Is same DTC indicated?

   YES – Replace the TCM with a new one (page 4-55), and recheck.

   NO – Faulty original No.2 clutch assembly

DTC P171B/P171C

Probable cause:

- Faulty clutch oil circuit (page 11-38)
- No.1 clutch sticking
- No.2 clutch sticking
- Faulty TCM

Symptom/Fail-safe function:

- Gearshift function does not work

1. **Clutch Inspection**

   Replace the clutch assembly with a new one (page 11-46).

   – DTC P171B: No.1 clutch assembly
   – DTC P171C: No.2 clutch assembly

   Erase the DTC (page 11-8).
   Drive the motorcycle as follows:

   – P1700: Drive the motorcycle for a minute in each gear at 1st, 3rd and 5th gear.
   – P1701: Drive the motorcycle for a minute in each gear at 2nd, 4th and 6th gear.

   Check the DTC with MCS.

   Is same DTC indicated?

   YES – Replace the TCM with a new one (page 4-55), and recheck.

   NO – Faulty original clutch assembly

DTC P171D/P171E/P171F/P1720/P1721

Probable cause:

- Engine oil level is low (page 3-9)
- Faulty oil pump (page 9-4)
- Faulty clutch oil circuit (page 11-38)
- Faulty No.1 clutch EOP sensor
- Faulty TCM

Symptom/Fail-safe function:

- Gearshift function does not work

1. **Clutch EOP Sensor Inspection**

   Replace the No.1 clutch EOP sensor with a new one (page 11-38).
   Erase the DTC (page 11-8).
   Drive the motorcycle for a minute in each gear at 1st, 3rd and 5th gear.
   Check the DTC with GST or MCS.

   Is same DTC indicated?

   YES – Replace the TCM with a new one (page 4-55), and recheck.

   NO – Faulty original No.1 clutch EOP sensor

DTC P1722/P1723/P1724/P1725/P1726

Probable cause:

- Engine oil level is low (page 3-9)
- Faulty oil pump (page 9-4)
- Faulty clutch oil circuit (page 11-38)
- Faulty No.2 clutch EOP sensor
- Faulty TCM

Symptom/Fail-safe function:

- Gearshift function does not work

1. **Clutch EOP Sensor Inspection**

   Replace the No.2 clutch EOP sensor with a new one (page 11-38).
   Erase the DTC (page 11-8).
   Drive the motorcycle for a minute in each gear at 2nd, 4th and 6th gear.
   Check the DTC with GST or MCS.

   Is same DTC indicated?

   YES – Replace the TCM with a new one (page 4-55), and recheck.

   NO – Faulty original No.2 clutch EOP sensor

DTC P1728/P1729

Probable cause:

- Faulty gearshift mechanism
- Faulty TR sensor
- Faulty TCM

Symptom/Fail-safe function:

- Gearshift function does not work

Refer to DTC P1714 (page 11-26).

DTC P172C

Probable cause:

- Faulty N-D switch or its related circuit
- Faulty TCM

Symptom/Fail-safe function:

- N-D switch does not work

1. N-D Switch Input Voltage Inspection

Disconnect the right handlebar switch 8P (Black) connector (page 21-17).
Temporarily install the ignition switch.
Turn the ignition switch ON.
Measure the voltage at the wire harness side 8P (Black) connector [1] and ground.

CONNECTION: Yellow/red (+) – Ground (–)

Is the voltage within 4.75 – 5.25 V?

YES – GO TO STEP 2.

NO – • Open circuit in the Yellow/red wire
• If the wire is OK, replace the TCM with a new one (page 4-55), and recheck.

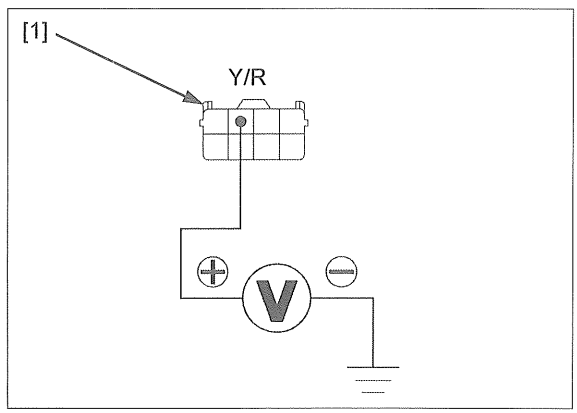

2. N-D Switch Signal Line Open Circuit Inspection

Turn the ignition switch OFF.
Disconnect the TCM 33P (Gray) connector (page 4-55).
Check for continuity between the wire harness side 8P (Black) connector [1] and 33P (Gray) connector [2].

CONNECTION:
D side: Blue – B22
N side: Light green – B33

Is there continuity?

YES – GO TO STEP 3.

NO – • D side: Open circuit in the Blue wire
• N side: Open circuit in the Light green wire

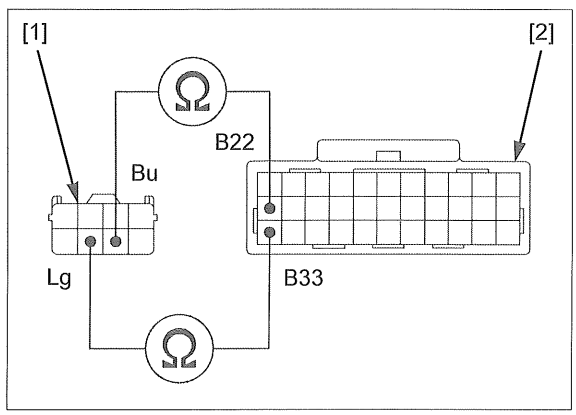

3. N-D Switch Signal Line Short Circuit Inspection

Check for continuity between the wire harness side 8P (Black) connector [1] and ground.

CONNECTION:
D side: Blue – Ground
N side: Light green – Ground

Is there continuity?

YES – • D side: Short circuit in the Blue wire
• N side: Short circuit in the Light green wire

NO – GO TO STEP 4.

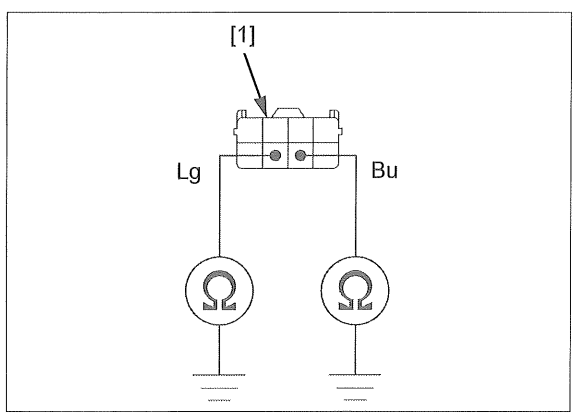

4. **N-D Switch Inspection**

Replace the right handlebar switch (N-D switch) with a new one (page 21-17).
Connect the disconnected connector(s).
Erase the DTC (page 11-8).
Turn the ignition switch ON and wait for 10 seconds.
Check the DTC with MCS.

Is same DTC indicated?

YES – Replace the TCM with a new one (page 4-55), and recheck.

NO – Faulty original N-D switch

DTC P172D

Probable cause:

- Faulty shift switch or its related circuit
- Faulty TCM

Symptom/Fail-safe function:

- Shift switch does not work

1. **Shift Switch Input Voltage Inspection**

Disconnect the left handlebar switch 8P connector (page 21-17).
Temporarily install the ignition switch.
Turn the ignition switch ON.
Measure the voltage at the wire harness side 8P connector [1] and ground.

CONNECTION: Yellow/red (+) – Ground (–)

Is the voltage within 4.75 – 5.25 V?

YES – GO TO STEP 2.

NO – • Open circuit in the Yellow/red wire
• If the wire is OK, replace the TCM with a new one (page 4-55), and recheck.

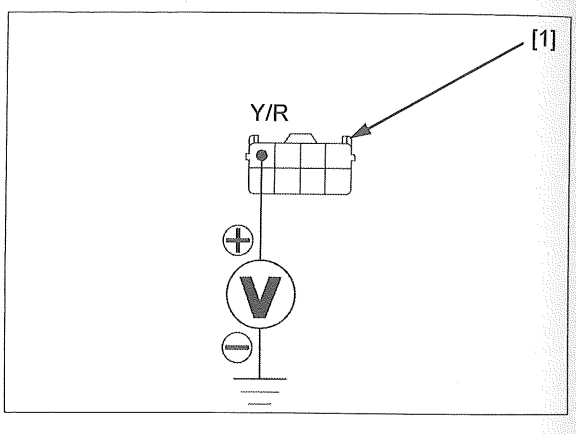

2. **Shift Switch Signal Line Open Circuit Inspection**

Turn the ignition switch OFF.
Disconnect the TCM 33P (Gray) connector (page 4-55).
Check for continuity between the wire harness side 8P connector [1] and 33P (Gray) connector [2].

CONNECTION:
Shift up side: Black – B28
Shift down side: Black/blue – B29

Is there continuity?

YES – GO TO STEP 3.

NO – • Shift up side: Open circuit in the Black wire
• Shift down side: Open circuit in the Black/blue wire

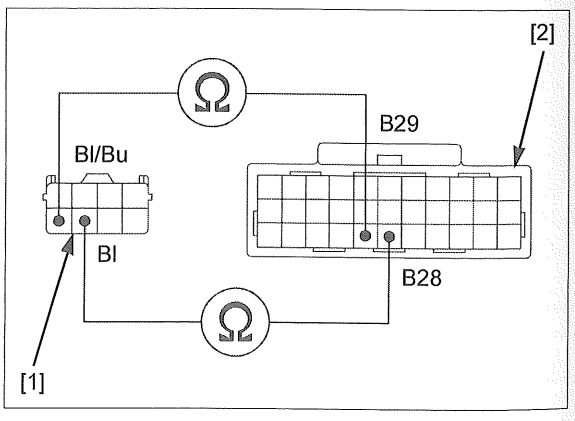

3. **Shift Switch Signal Line Short Circuit Inspection**

Check for continuity between the wire harness side 8P connector [1] and ground.

CONNECTION:
Shift up side: Black – Ground
Shift down side: Black/blue – Ground

Is there continuity?

YES – • Shift up side: Short circuit in the Black wire
• Shift down side: Short circuit in the Black/blue wire

NO – GO TO STEP 4.

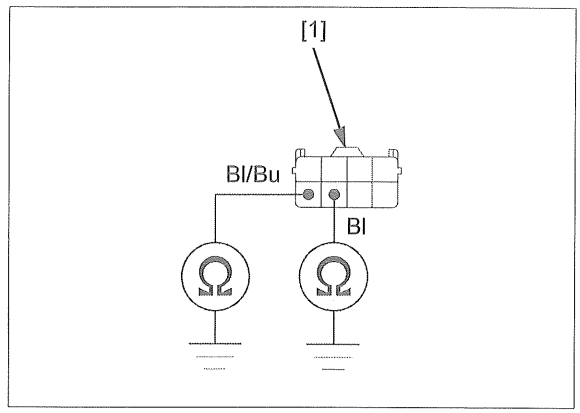

4. **Shift Switch Inspection**

Replace the left handlebar switch (shift switch) with a new one (page 21-17).
Connect the disconnected connector(s).
Erase the DTC (page 11-8).
Turn the ignition switch ON and wait for 10 seconds.
Check the DTC with MCS.

Is same DTC indicated?

YES – Replace the TCM with a new one (page 4-55), and recheck.

NO – Faulty original shift switch

DTC P172E

Probable cause:

- Faulty DCT relay or its related circuit
- Blown PVB fuse (30 A)
- Faulty TCM
- Faulty ECM

Symptom/Fail-safe function:

- DCT relay does not work

1. **DCT Relay Inspection**

Turn the ignition switch OFF.
Remove the DCT relay (page 21-22).
Check the DCT relay (page 21-23).

Is the DCT relay normal?

YES – GO TO STEP 2.

NO – Faulty DCT relay

2. **DCT Relay Input Voltage Inspection**

Measure the voltage at the wire harness side relay connector [1].

CONNECTION: Yellow/red (+) – Green (–)

Is there battery voltage?

YES – GO TO STEP 3.

NO – • Open circuit in the Yellow/red wire
• Blown PVB fuse (30 A)
• Open circuit in the Green wire

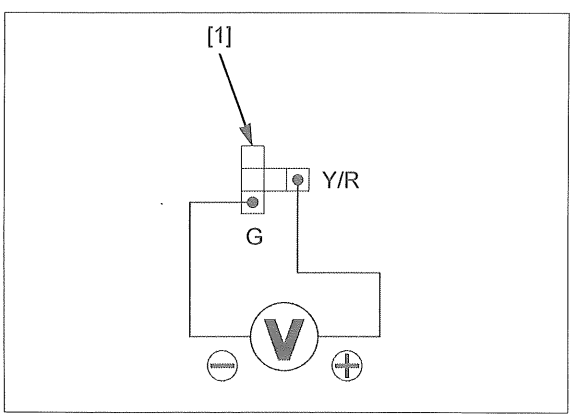

3. **DCT Relay Output Line Open Circuit Inspection**

Disconnect the TCM 33P (Black) connector (page 4-55).
Check for continuity between the wire harness side relay connector [1] and TCM 33P (Black) connector [2].

CONNECTION:
White – A3
White – A14

Is there continuity?

YES – GO TO STEP 4.

NO – Open circuit in the White wire

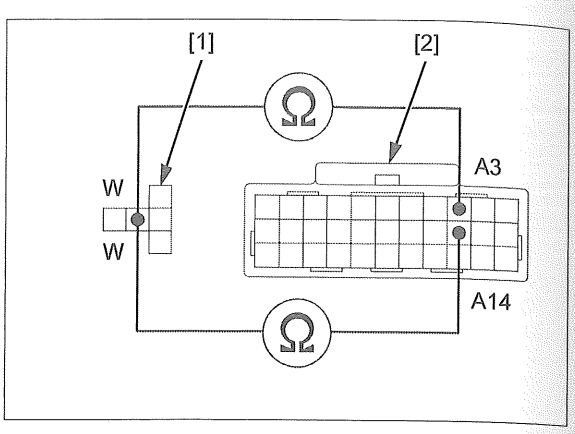

4. **DCT Relay Coil Line Open Circuit Inspection**

Disconnect the ECM 33P (Gray) connector (page 4-55).
Check for continuity between the wire harness side relay connector [1] and ECM 33P (Gray) connector [2].

CONNECTION: Yellow – Yellow (C9)

Is there continuity?

YES – GO TO STEP 5.

NO – Open circuit in the Yellow wire

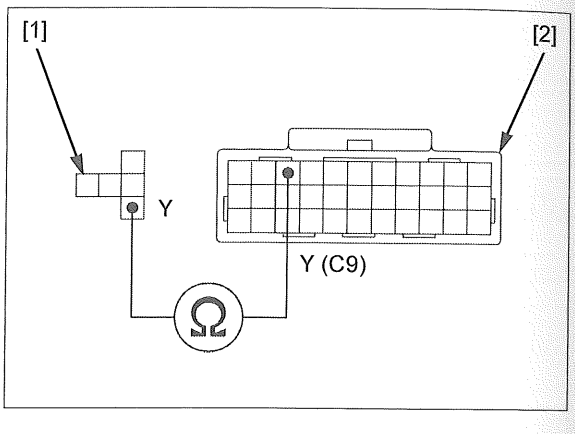

5. **DCT Relay Coil Line Short Circuit Inspection**

Check for continuity between the wire harness side relay connector [1] and ground.

CONNECTION: Yellow – Ground

Is there continuity?

YES – Short circuit in the Yellow wire

NO – GO TO STEP 6.

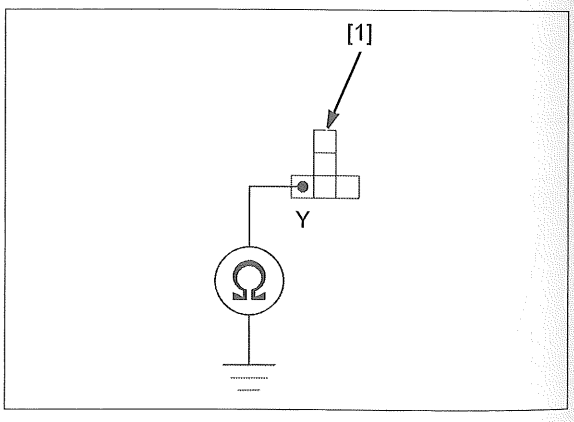

6. **TCM Inspection**

Replace the TCM with a new one (page 4-55).
Connect the disconnected connector(s).
Erase the DTC (page 11-8).
Turn the ignition switch ON and wait for 10 seconds.
Check the DTC with GST or MCS.

Is same DTC indicated?

YES – Replace the ECM with a new one (page 4-55), and recheck.

NO – Faulty original TCM

DTC P172F

Probable cause:

- Faulty shift spindle angle sensor
- Faulty TCM

Symptom/Fail-safe function:

- Gearshift function does not work

Refer to DTC P1713 (page 11-25).

DTC P2765

Probable cause:

- Electromagnetic interference
- Faulty outer mainshaft sensor or its related circuit
- Faulty TCM

Symptom/Fail-safe function:

- Gearshift function does not work

NOTE:

- When the DTC P0562 or P0686 for the PGM-FI system is displayed, troubleshoot it first (page 4-34).

1. **Outer Mainshaft Sensor Input Voltage Inspection**

   Disconnect the outer mainshaft sensor 3P connector (page 11-57).
   Temporarily install the ignition switch, starter relay switch and battery.
   Turn the ignition switch ON.
   Measure the voltage at the wire harness side 3P connector [1].

   CONNECTION: Pink/blue (+) – Green/black (–)

   Is there about battery voltage?

   YES – GO TO STEP 2.

   NO – • Open circuit in the Pink/blue wire
   • Open circuit in the Green/black or Green wire

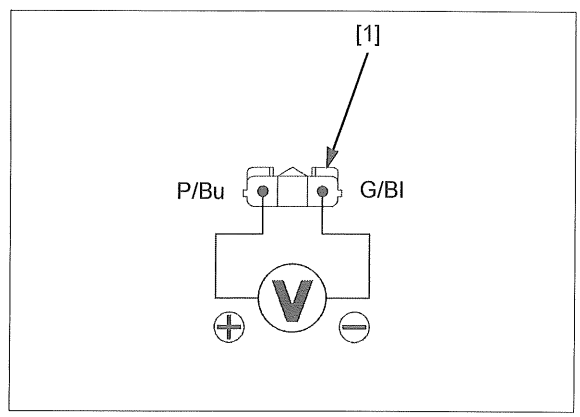

2. **Outer Mainshaft Sensor Output Line Open Circuit Inspection**

   Turn the ignition switch OFF.
   Disconnect the TCM 33P (Gray) connector (page 4-55).
   Check for continuity between the wire harness side 3P connector [1] and TCM 33P (Gray) connector [2].

   CONNECTION: Pink – B25

   Is there continuity?

   YES – GO TO STEP 3.

   NO – Open circuit in the Pink wire

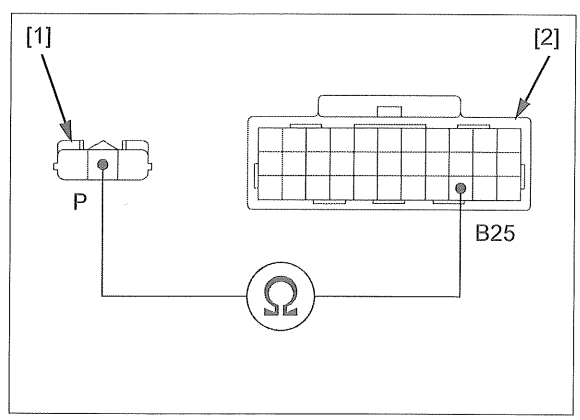

3. **Outer Mainshaft Sensor Output Line Short Circuit Inspection**

Check for continuity between the wire harness side 3P connector [1] and ground.

CONNECTION: Pink – Ground

Is there continuity?

YES – Short circuit in the Pink wire

NO – GO TO STEP 4.

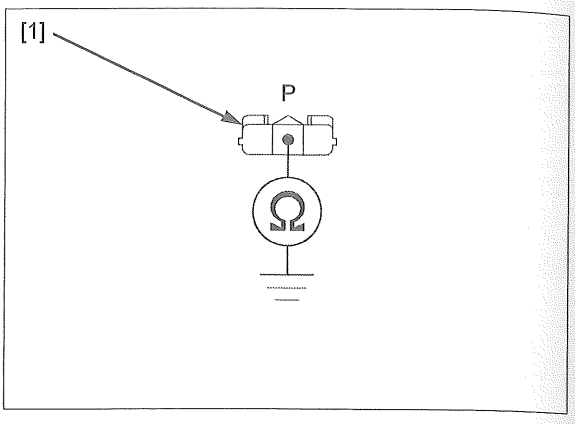

4. **Outer Mainshaft Sensor Inspection**

Replace the outer mainshaft sensor with a new one (page 11-57).
Erase the DTC (page 11-8).
Drive the motorcycle for a minute in each gear at 2nd, 4th and 6th gear.
Check the DTC with GST or MCS.

Is same DTC indicated?

YES – Replace the TCM with a new one (page 4-55), and recheck.

NO – Faulty original outer mainshaft sensor

A/M SWITCH TROUBLESHOOTING

If the engine can be started but AT/MT mode cannot be changed, perform this troubleshooting.

NOTE:

- Before starting the inspection, check for loose or poor contact on the right handlebar switch 8P (Black) connector and TCM 33P (Black) connector, and recheck the A/M switch operation.

1. A/M Switch Power Input Voltage Inspection

Disconnect the right handlebar switch 8P (Black) connector (page 21-17).
Temporarily install the ignition switch.
Turn the ignition switch ON.
Measure the voltage between the wire harness side 8P (Black) connector [1] and ground.

Connection: Black (+) – Ground (–)

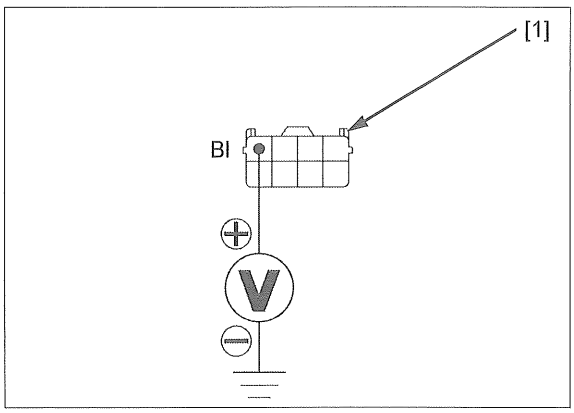

Is there battery voltage?

YES – GO TO STEP 2.

NO – Open circuit in the Black wire

2. A/M Switch Output Line Open Circuit Inspection

Turn the ignition switch OFF.
Disconnect the TCM 33P (Black) connector (page 4-55).
Check for continuity between the wire harness side 8P (Black) connector [1] and 33P (Black) connector [2].

Connection: Blue – B1

TOOL:
Test probe **07ZAJ-RDJA110**

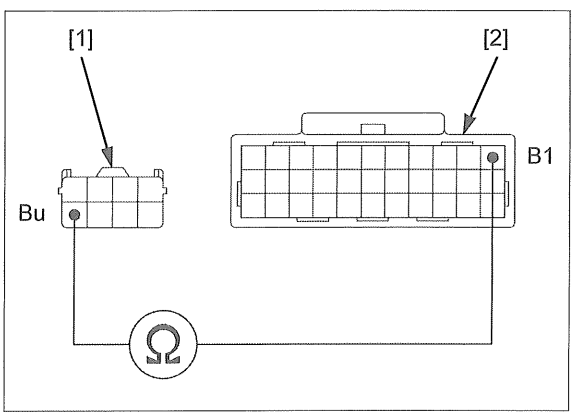

Is there continuity?

YES – GO TO STEP 3.

NO – Open circuit in the Blue wire

3. A/M Switch Inspection

Check the A/M switch (page 21-17).

Is the switch normal?

YES – Replace the TCM with a known good one (page 4-55), and recheck.

NO – Replace the right handlebar switch (page 21-17).

RIGHT CRANKCASE COVER

REMOVAL

Drain the engine oil (page 3-10).

Remove the following:

- Center lower cover (page 2-21)
- Shift spindle angle sensor (page 11-59)

Disconnect the EOP switch 1P (Gray) connector (page 21-14).

Disconnect the linear solenoid valve 4P (Black) connector [1]

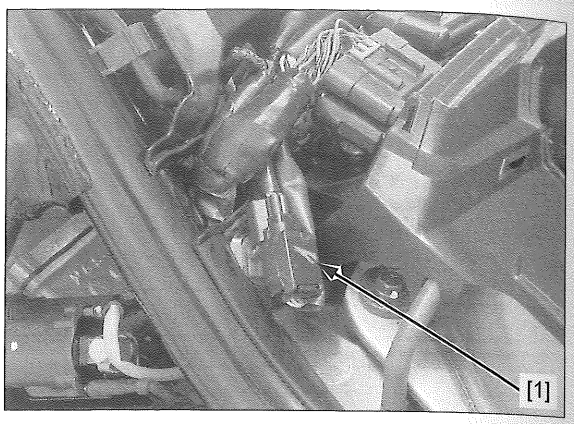

Release the wire clip [1].

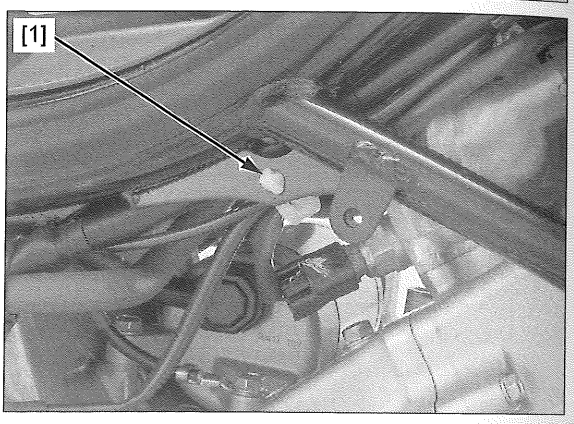

Remove the bolt [1], heat guard plate [2] and washer [3].

Remove the A/F sensor 1P (Black) connector [4] from the right floor stay [5].

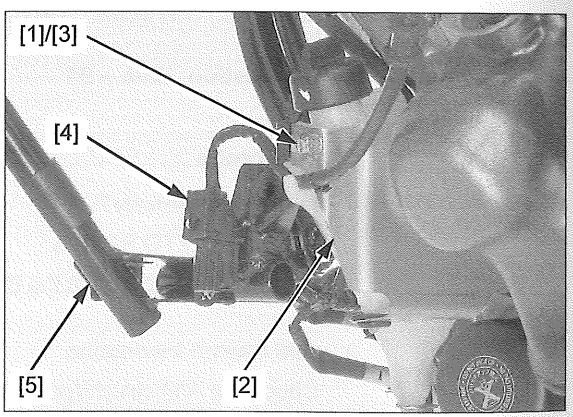

Remove the bolts [1] and right floor stay [2].

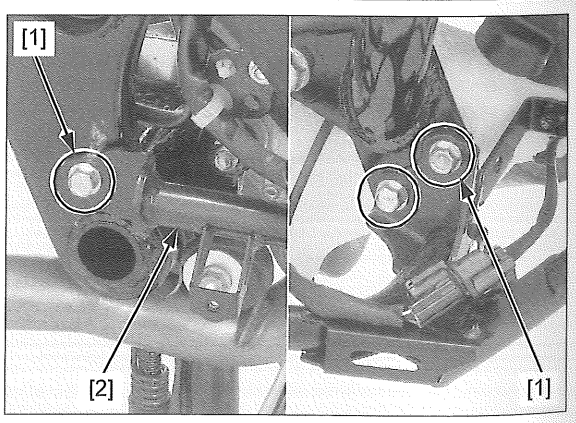

Disconnect the clutch EOP sensor 3P connectors [1].

Remove the wire clip [2].

Remove the bolt [3] and wire clamp [4].

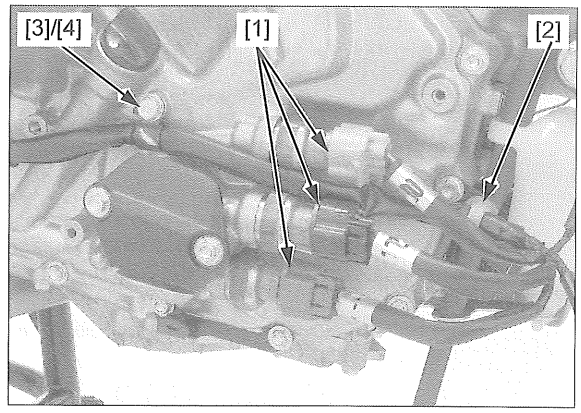

Remove the following:

- Bolts [1]
- Sealing washer [2]
- Stays [3]
- Rubber [4]
- Right crankcase cover [5]

NOTE:

- Do not allow dust or dirt to enter the oil passages.

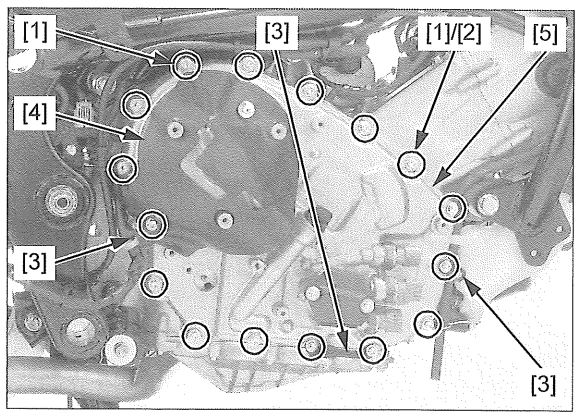

Remove the dowel pins [1].

Remove the oil joint pipe [2].

Remove the O-rings [3] and backup rings [4] from the joint pipe.

Remove the seal rings [5] from the mainshaft end.

Inspect the bearing [6] and replace if necessary.

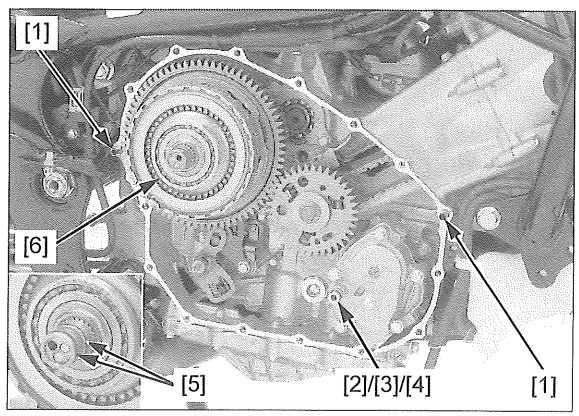

LINEAR SOLENOID VALVE BODY

NOTE:

- Keep dust and dirt away from all the parts.
- Be careful not to damage the mating surfaces of the valve body components.

REMOVAL

Remove the right crankcase cover (page 11-38).

Remove the linear solenoid valve wire clamp bolts [1] and wire clamp [2].

Release the linear solenoid valve wire grommet [3].

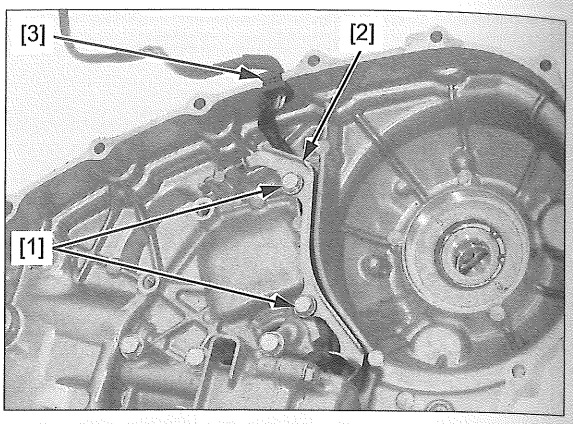

Remove the bolts [1] and linear solenoid valve body [2].

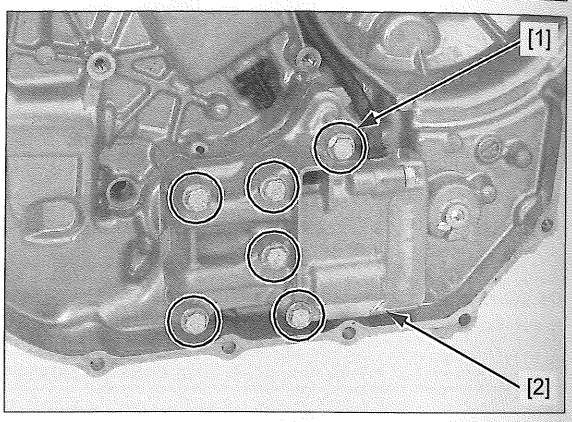

Remove the separator plate [1] and dowel pins [2].

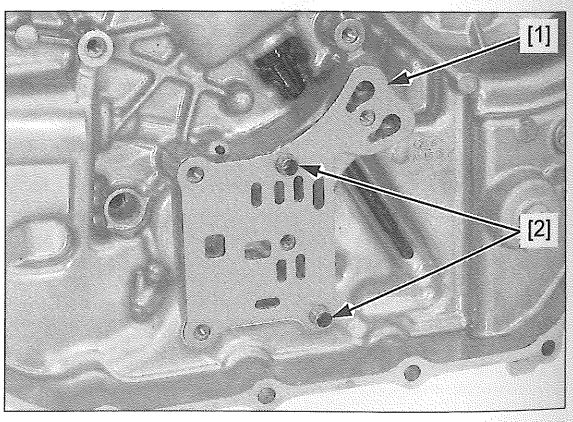

DISASSEMBLY/ASSEMBLY

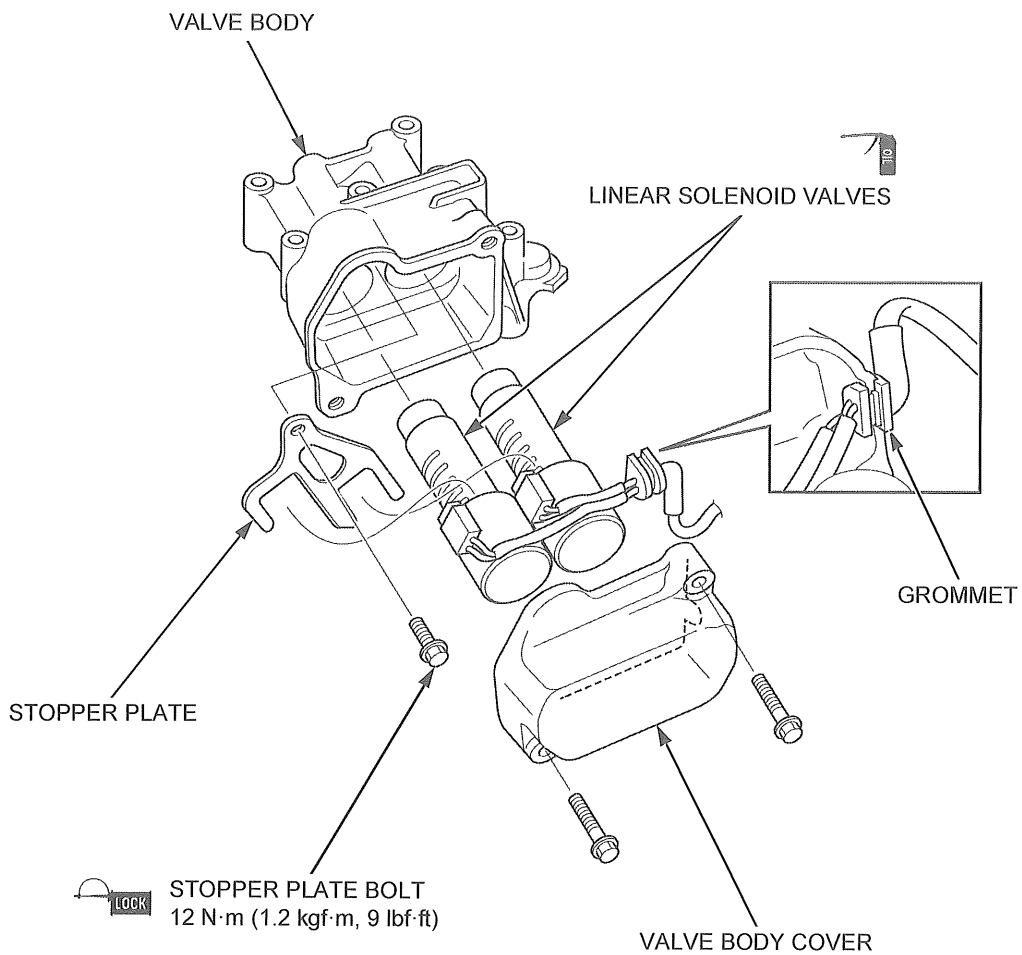

NOTE:

- Clean all the parts with compressed air. Make sure that there is no dust or lint on any parts.
- Apply engine oil to the linear solenoid valve sliding surface.
- Apply locking agent to the threads of the solenoid valve stopper plate bolt (page 1-15).

INSTALLATION

Check the oil filter screen [1] and packing [2] for damage and replace them if necessary.

Install the dowel pins [3] and separator plate [4] onto the right crankcase cover.

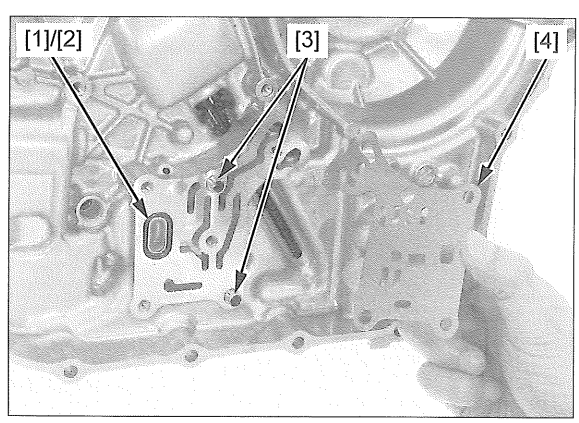

Install the valve body [1] and bolts [2].

Tighten the bolts in the sequence as shown.

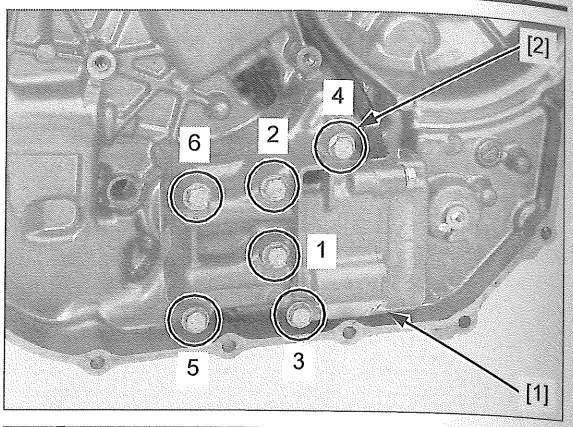

Apply liquid sealant (TB1207B manufactured by Three Bond or equivalent) to the linear solenoid valve wire grommet sealing surface.

Install the linear solenoid valve wire grommet [1] to the right crankcase cover.

Apply locking agent to the threads of the linear solenoid valve wire clamp bolts (page 1-15).

Install the wire clamp [2] and right crankcase cover wire clamp bolts [3].

Tighten the right crankcase cover wire clamp bolts to the specified torque.

TORQUE: 12 N·m (1.2 kgf·m, 9 lbf·ft)

Install the right crankcase cover (page 11-43).

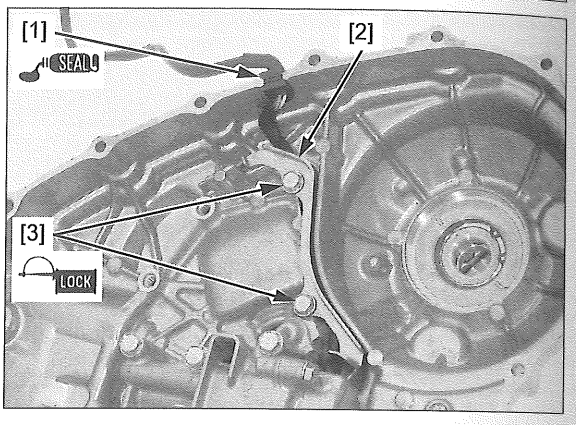

OIL GUIDE COLLAR REMOVAL/ INSTALLATION

Remove the right crankcase cover (page 11-38).

Remove the snap ring [1] from the right crankcase cover.

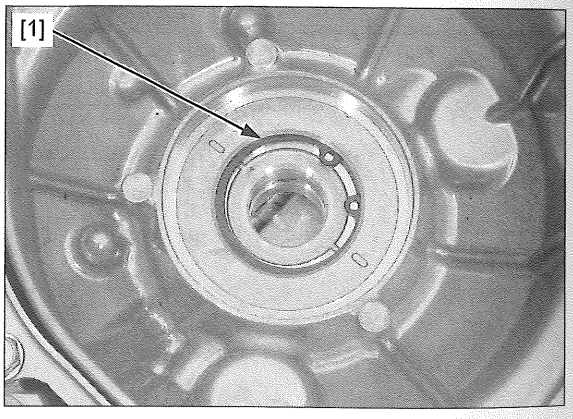

Remove the oil guide collar [1] from the right crankcase cover with the special tool.

TOOL:
Bearing remover, 20 mm [2] 07931-MA70000

Remove the O-rings [3] from the oil guide collar.

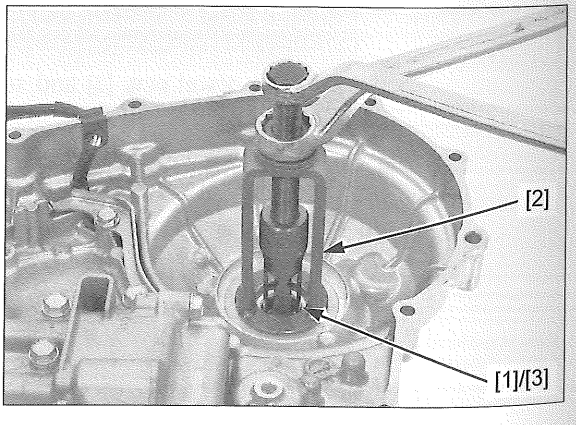

Coat new O-rings [1] with engine oil and install them into the grooves in the oil guide collar [2].

Install the oil guide collar into the right crankcase cover until it is seated.

NOTE:

- Align the oil guide collar tab [3] with the right crankcase cover groove [4].

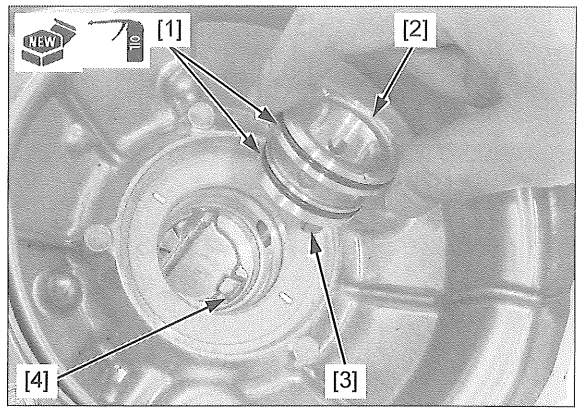

Make sure that the index marks [1] of the oil guide collar and right crankcase cover are aligned.

Install the snap ring [2] into the right crankcase cover groove with the chamfered edge facing in.

Install the right crankcase cover (page 11-43).

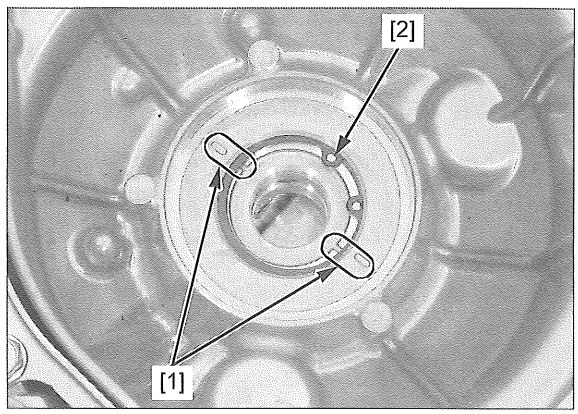

INSTALLATION

Coat new O-rings with engine oil.

Install the O-rings [1] and backup rings [2] onto the oil joint pipe [3].

Install the oil joint pipe into the oil pump.

NOTE:

- Do not allow dust or dirt to enter the oil passages.

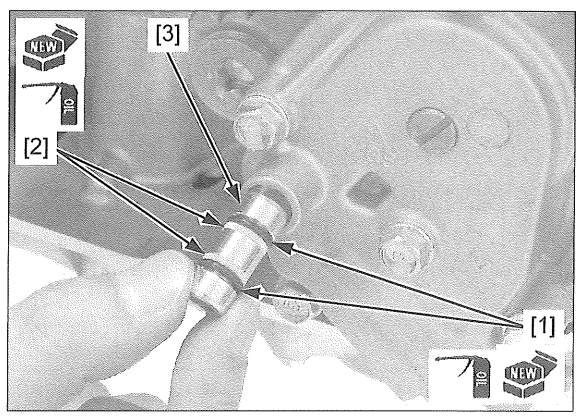

Install the dowel pins [1].

Apply engine oil to new seal rings.

Install the seal rings [2] into the mainshaft grooves.

Push in the seal rings to seat them into the grooves as shown.

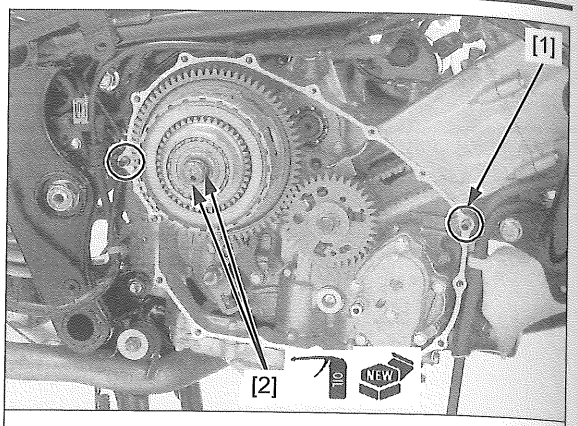

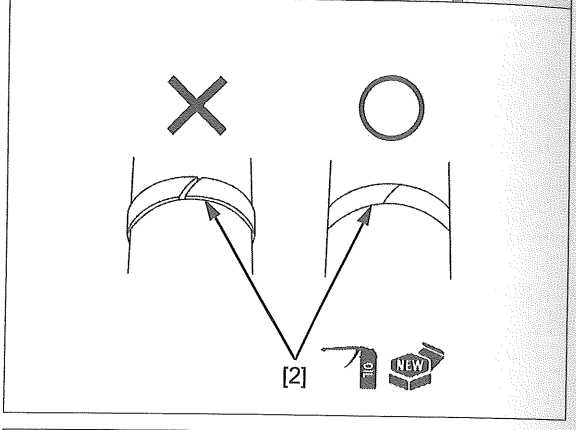

Clean the right crankcase cover mating surfaces thoroughly.

Apply liquid sealant (TB1207B manufactured by Three Bond or equivalent) to the right crankcase cover mating surface as shown.

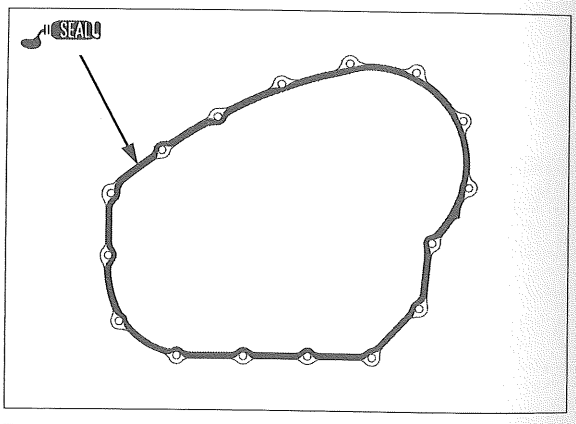

Install the right crankcase cover [1].

NOTE:

- Be careful not to damage the seal rings.
- Do not allow dust or dirt to enter the oil passages.

Install the following:

- Stays [2]
- Sealing washer [3]
- Bolts [4]
- Rubber [5]

Tighten the bolts in a crisscross pattern in 2 or 3 steps.

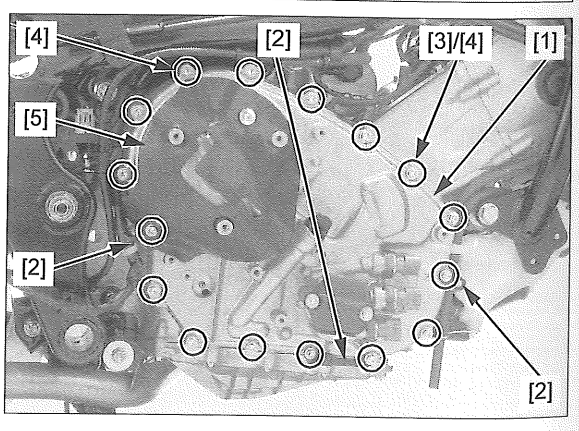

Connect the clutch EOP sensor 3P connectors [1].

NOTE:

- Each sensor wires has the following identification mark:
  - 2: No.2 clutch (upper) EOP sensor
  - P: Clutch line (middle) EOP sensor
  - 1: No.1 clutch (lower) EOP sensor

Install the wire clip [2].

Install the wire clamp [3] and bolt [4].

Tighten the bolt securely.

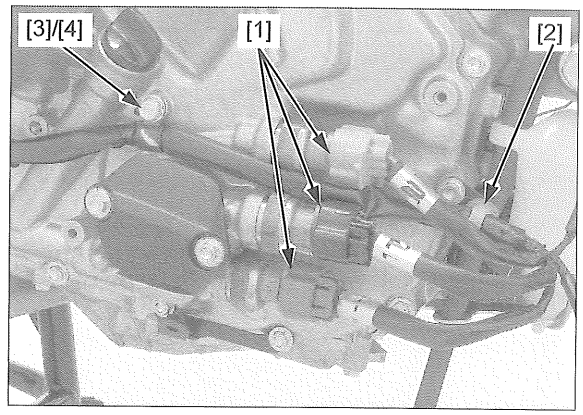

Install the right floor stay [1] and bolts [2].

Tighten the bolt securely.

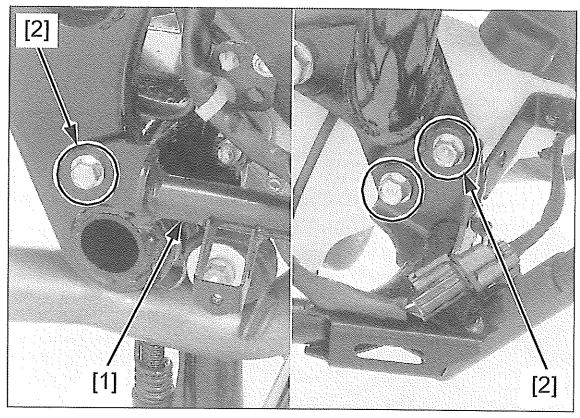

Install the washer [1], heat guard plate [2] and bolt [3].

Tighten the bolt securely.

Install the A/F sensor 1P (Black) connector [4] to the right floor stay [5].

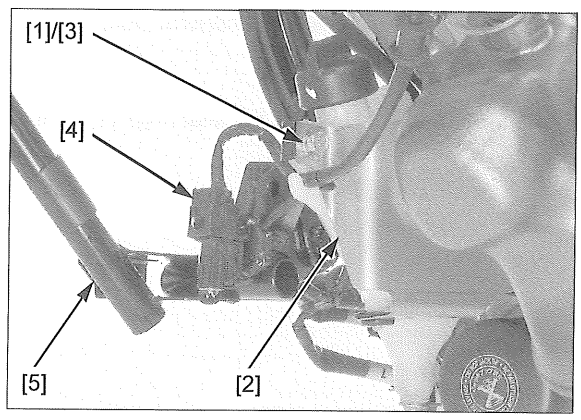

Install the wire clamp [1].

NOTE:

- Route the wires properly (page 1-20).

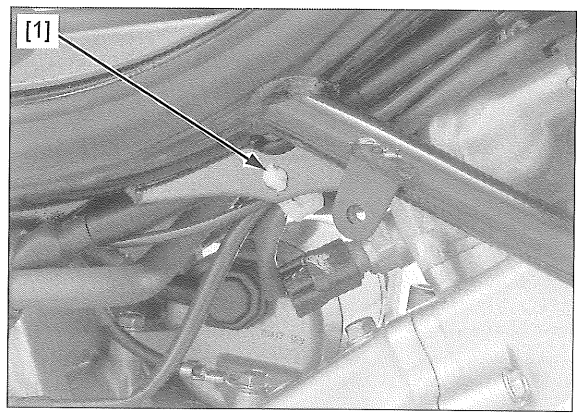

Connect the EOP switch 1P (Gray) connector (page 21-14).

Connect the linear solenoid valve 4P (Black) connector [1]

Install the following:

- Center lower cover (page 2-21)
- Shift spindle angle sensor (page 11-59)

Fill the engine oil (page 3-9).

DUAL CLUTCH

REMOVAL

Remove the primary drive gear (page 11-50).

Remove the bearing [1].

Remove the dual clutch assembly [2] from the mainshaft.

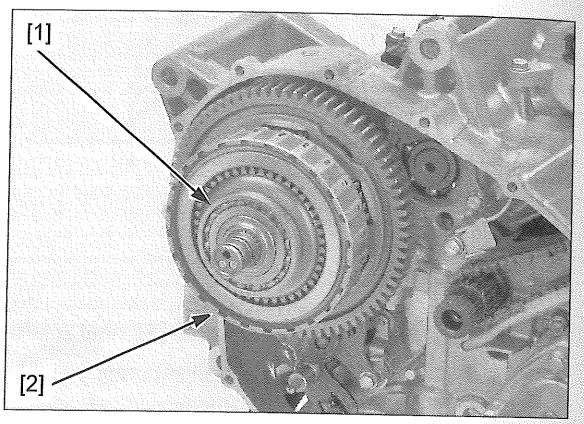

Remove the seal rings [1] from the mainshaft grooves.

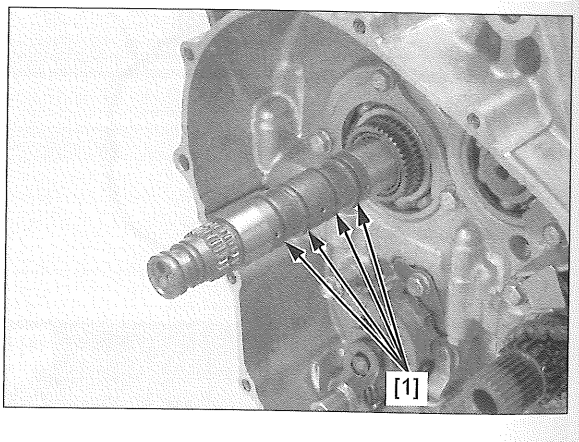

DISASSEMBLY

Remove the clutch guide 1 [1] and washer [2].

Turn over the dual clutch assembly.

Remove the clutch guide 2 [3], and washer [4].

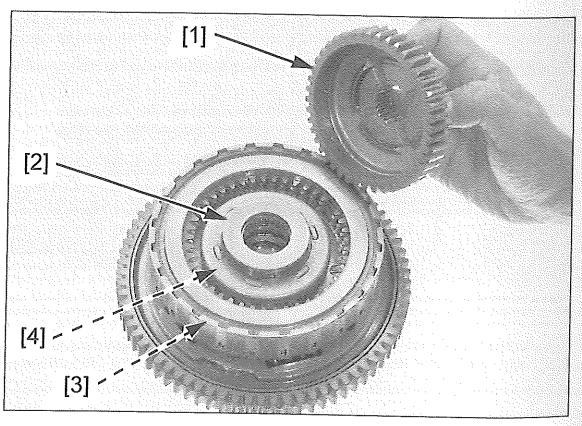

Remove the clutch assemblies [1] and O-rings [2] from the primary driven gear [3].

NOTE:

- Do not disassemble the clutch assembly.
- The No.1 clutch assembly (for inner mainshaft) and No.2 clutch assembly (for outer mainshaft) are the same parts.

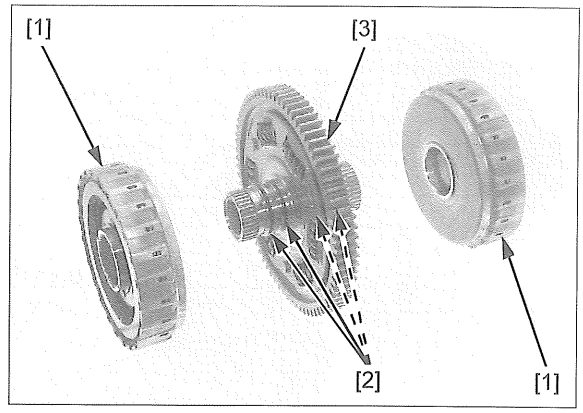

CLUTCH CLEARANCE INSPECTION

Set a dial indicator on the end plate [1] with the plate bottomed.

Measure the clearance by lifting the end plate against the snap ring [2] and record it.

Perform this inspection at three points in 120° apart.

SERVICE LIMIT: 2.0 mm (0.08 in)

If the measured value exceeds the service limit, replace the clutch assembly.

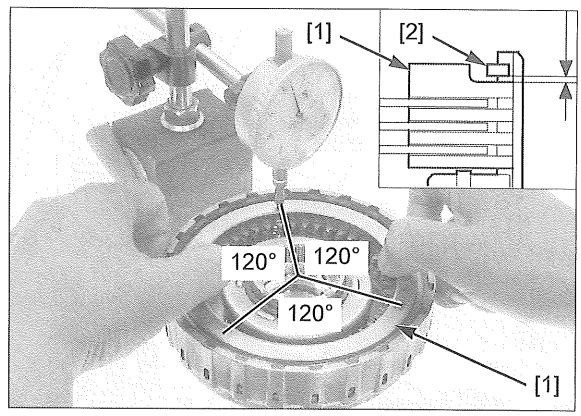

ASSEMBLY

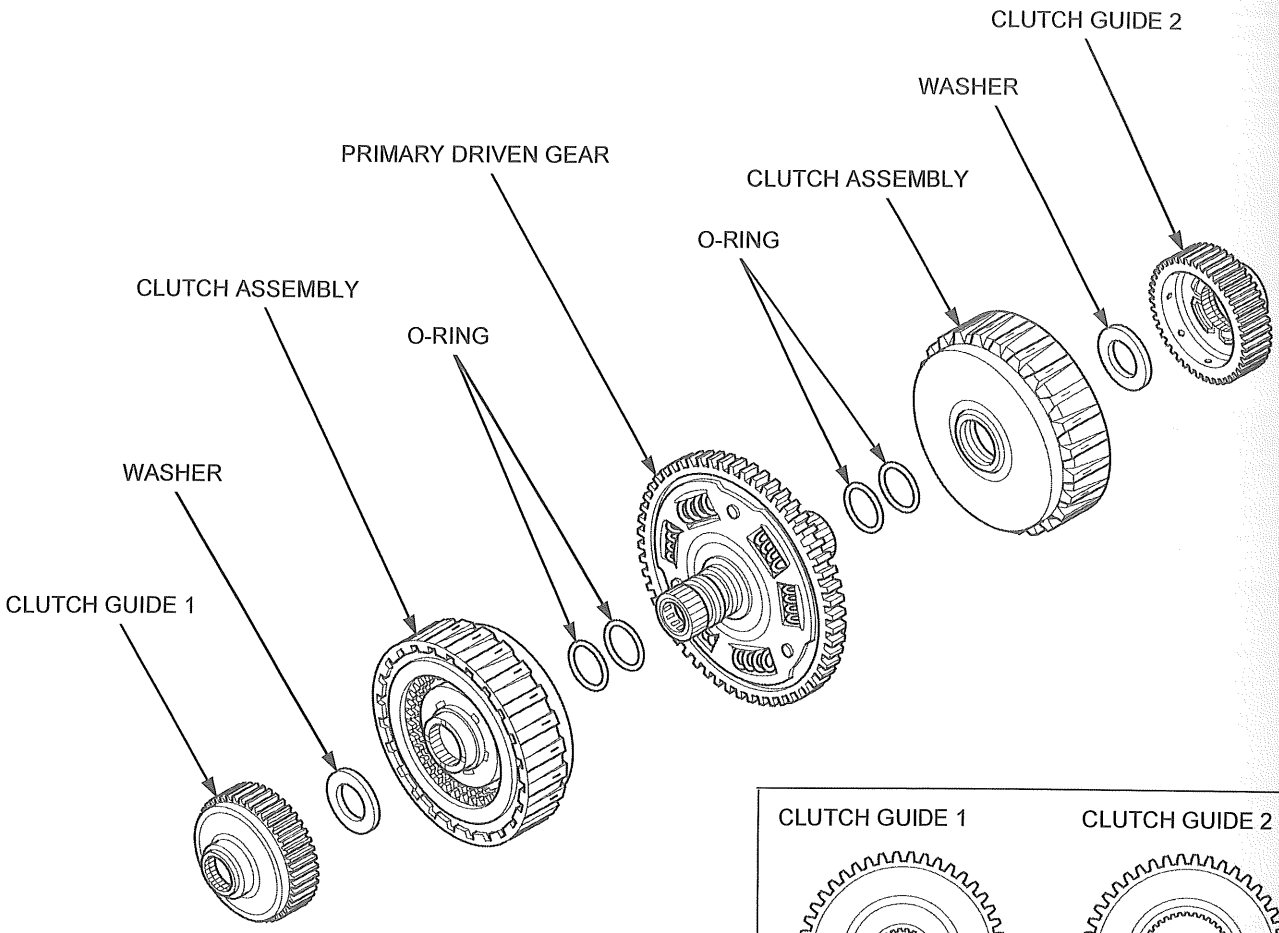

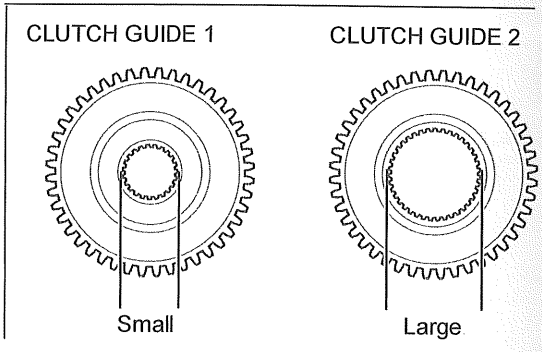

Coat new O-rings [1] with engine oil and install them into the grooves in the primary driven gear [2].

Apply molybdenum oil solution to the primary driven gear tooth, friction spring, and sliding surface.

Install the clutch assemblies [3] onto the primary driven gear.

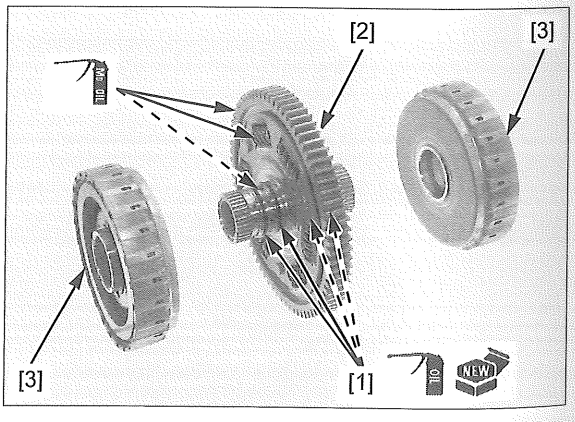

Place the dual clutch assembly and primary driven gear index line [1] facing up.

Apply engine oil to the needle bearings [2].

Line up the wide grooves [3] of the clutch discs [4].

Install the washer [5] onto the clutch assembly.

Install clutch guide 1 [6] into the clutch by aligning the gear teeth with grooves of the clutch discs.

NOTE:

- Set the washer in position as shown.

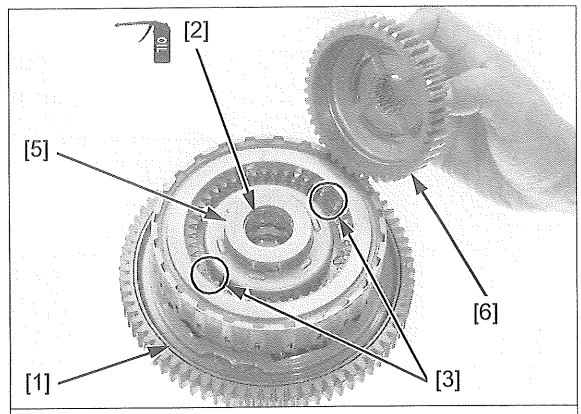

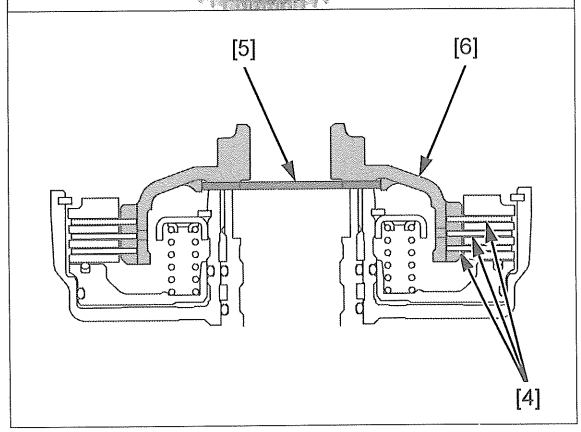

Turn over the dual clutch assembly while holding clutch guide 1.

Apply engine oil to the needle bearings [1].

Line up the wide grooves [2] of the clutch discs [3].

Install the washer [4] onto the clutch assembly.

Install clutch guide 2 [5] into the clutch by aligning the gear teeth with grooves of the clutch discs.

NOTE:

- Set the washer in position as shown.

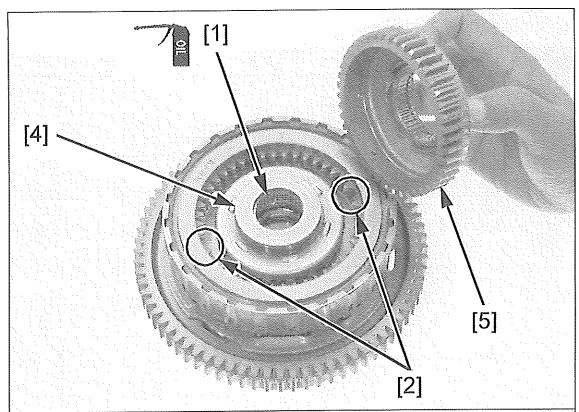

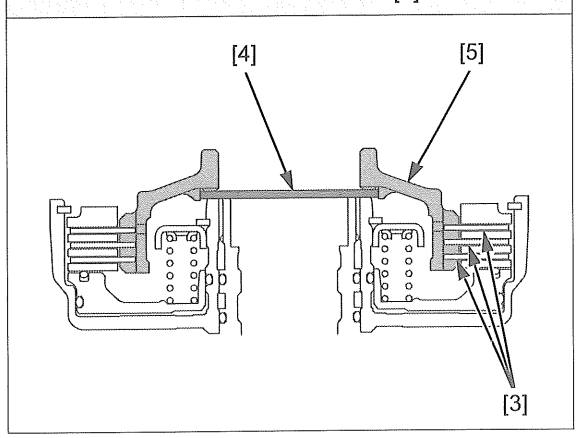

INSTALLATION

Apply engine oil to new seal rings.

Install the seal rings [1] into the mainshaft grooves.

Push in the seal rings to seat them into the grooves as shown.

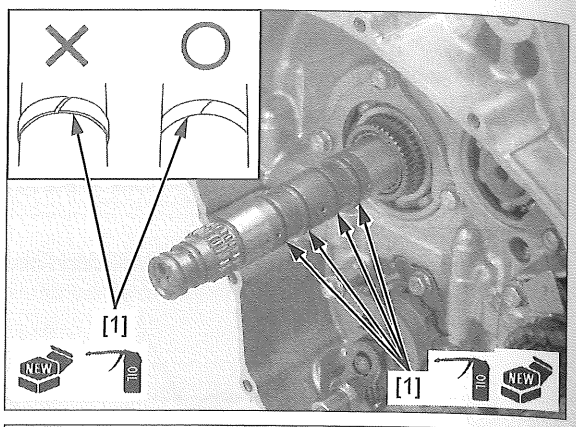

Be careful not to damage the seal rings.

Install the dual clutch assembly [1] onto the mainshaft while holding clutch guide 1 and 2.

Install the bearing [3] with the marked side facing out.

Install the primary drive gear (page 11-50).

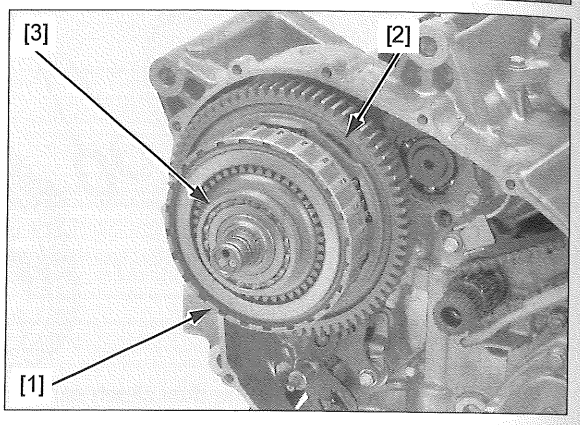

PRIMARY DRIVE GEAR

REMOVAL

Remove the right crankcase cover (page 11-38).

Align the gear teeth of the primary drive gear [1] and sub-gear [2] by prying the gears through the holes [3].

Hold the primary drive gear and sub-gear with a suitable 6 mm bolt [4].

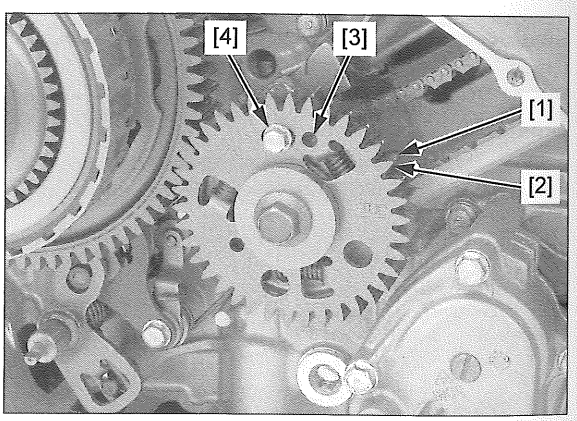

Install the special tool between the primary drive and driven gears, and loosen the primary drive gear bolt [1].

TOOL:

Gear holder, 2.5 [2] **07724-0010100**

Remove the following:

- Primary drive gear bolt
- Washer [3]
- Primary drive gear assembly [4]

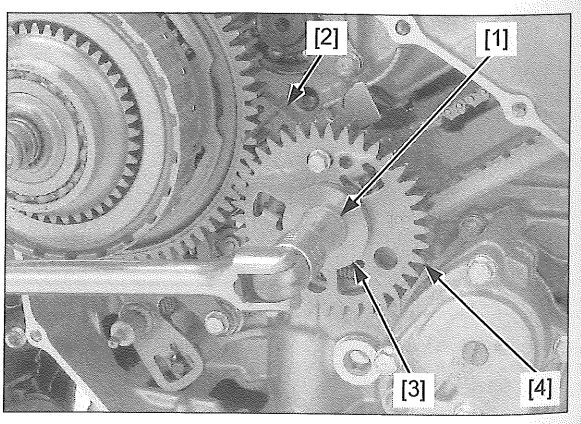

Remove the following from the primary drive gear [1] if necessary:

- 6 mm bolt [2]
- Primary drive sub-gear [3]
- Damper springs [4]

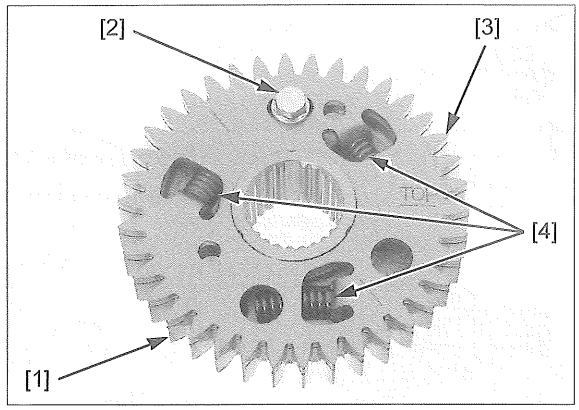

INSTALLATION

Apply molybdenum oil solution to the sliding surface or the primary drive gear [1] and loosely install the following if they are removed:

- Damper springs [2]
- Primary drive sub-gear [3]
- Suitable 6 mm bolt [4]

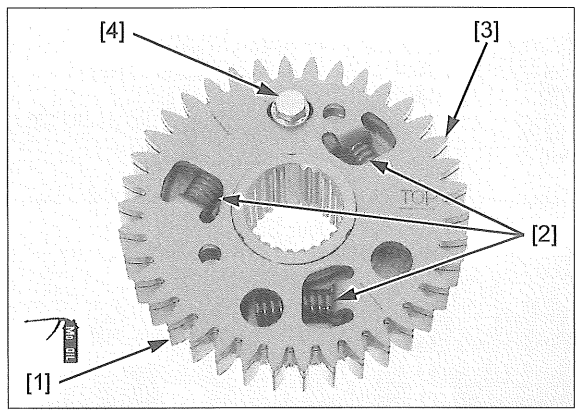

Install the primary drive gear assembly [1] onto the crankshaft by aligning their wide grooves with the wide tooth.

NOTE:

- If the primary drive sub-gear is removed, align the gear teeth of the primary drive gear and sub-gear by prying the gears through the holes [2].

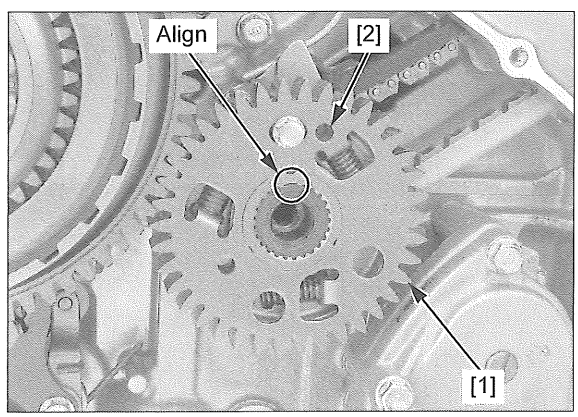

Apply engine oil to the threads and seating surface of the primary drive gear bolt [1].

Install the washer [2] and primary drive gear bolt.

NOTE:

- There is no installation direction for the washer.

Install the special tool between the primary drive gear and driven gear, and tighten the primary drive gear bolt to the specified torque.

TOOL:

Gear holder, 2.5 [3]	**07724-0010100**

TORQUE: 93 N·m (9.5 kgf·m, 69 lbf·ft)

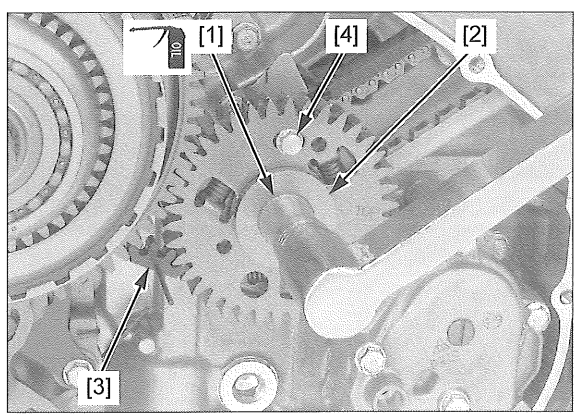

Remove the 6 mm bolt [4].

Install the right crankcase cover (page 11-43).

SHIFT CONTROL MOTOR/REDUCTION GEARS

REMOVAL

Remove the TR sensor (page 11-58).

Disconnect the shift control motor 2P (Black) connector [1].

Remove the bolts [2] and shift control motor [3].

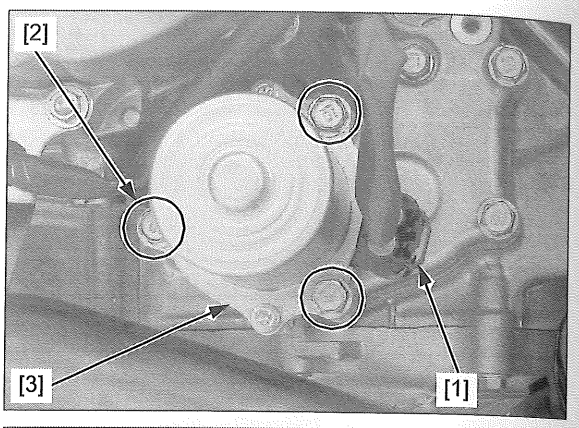

Remove the bolts [1] and reduction gear cover [2].

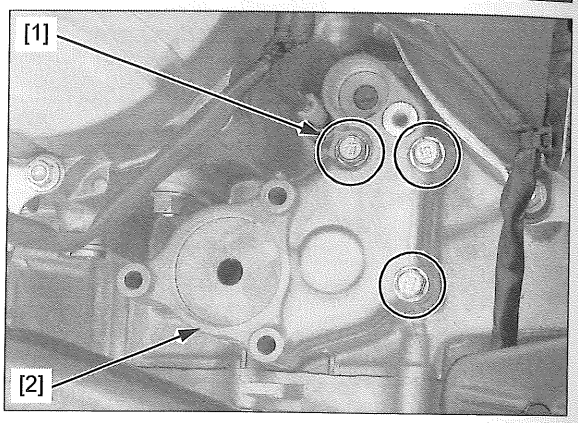

Remove the dowel pins [1] and gasket [2].

Remove the reduction gears [3].

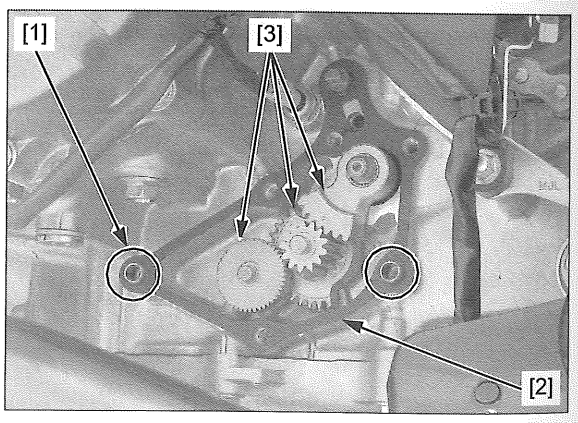

BEARING REPLACEMENT

Heat the reduction gear cover to 80°C (176°F) evenly using a heat gun.

NOTE:

- Do not use a torch to heat the reduction gear cover; it may cause warping.

Tap the reduction gear cover lightly and remove the bearings.

– Radial ball bearing (699ZZ) [1]
– Radial ball bearing (607ZZ) [2]
– Radial ball bearing (696ZZ) [3]

Apply engine oil to new bearings.

Drive in new bearings squarely until they are fully seated.

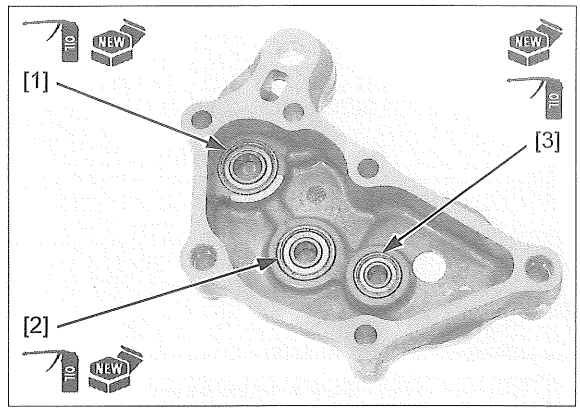

Check the following:

– Oil seal (14 x 22 x 5) [1]
– Radial ball bearing (607 ZZ) [2]
– Radial ball bearing (696 ZZ) [3]

Replace the oil seal if necessary, after removing the gearshift spindle (page 11-54).

Replace the bearings in the same manner as the reduction gear cover side if necessary, after separating the crankcase (page 13-4).

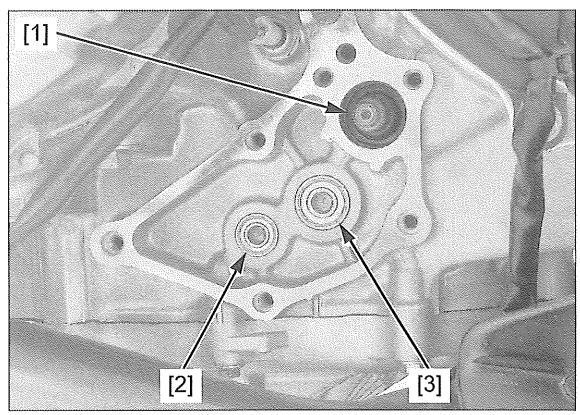

INSTALLATION

Apply 2 – 4 g (0.07 – 0.14 oz) of specified grease to the reduction gear bearing journals [1].

SPECIFIED GREASE:
UNIREX N3 manufactured by ExxonMobil or equivalent

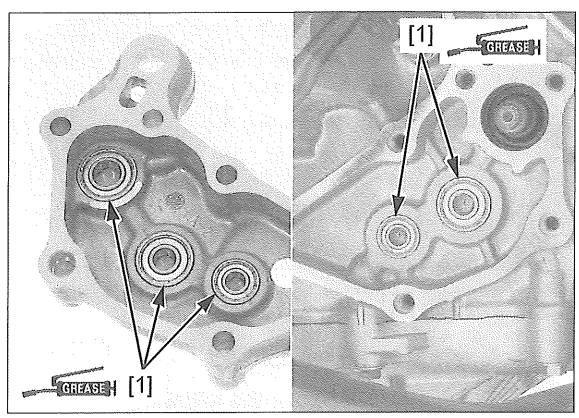

Install the reduction gear B [1].

Align the reduction gear B ends with the ribs of the crankcase.

Install the reduction gear C [2].

NOTE:

- Position the punch marks on the reduction gear C and shift spindle as shown.

Install reduction gear A [3].

Install the dowel pins [4] and a new gasket [5].

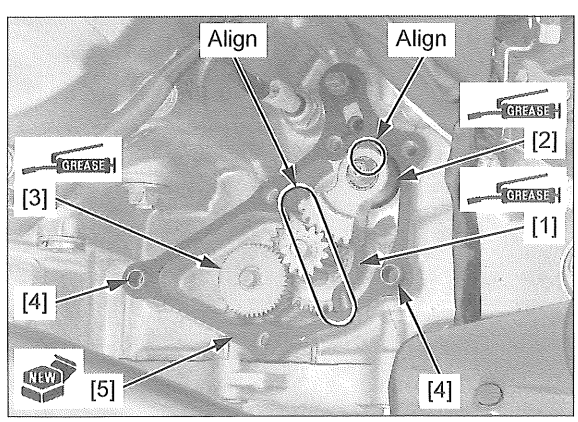

Install the reduction gear cover [1] and reduction gear cover bolts [2].

Tighten the reduction gear cover bolts to the specified torque.

TORQUE: 14 N·m (1.4 kgf·m, 10 lbf·ft)

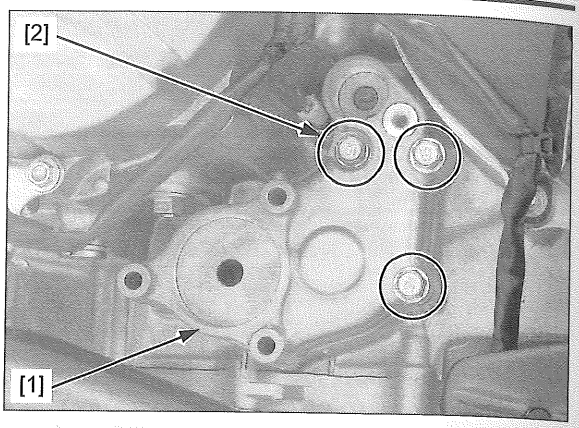

Coat a new O-ring with engine oil.

Install the O-ring [1] to the shift control motor groove.

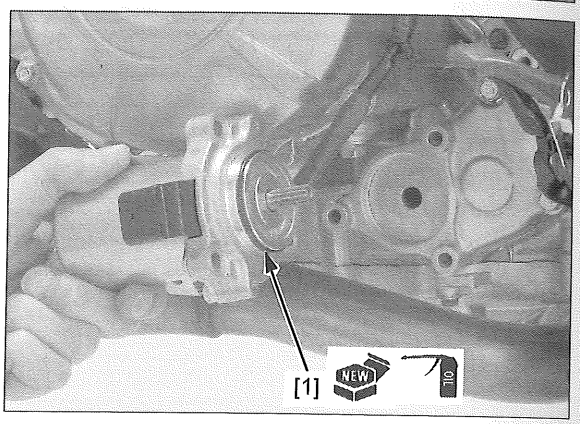

Install the shift control motor [1] and shift control motor bolts [2].

Tighten the shift control motor bolts to the specified torque.

TORQUE: 14 N·m (1.4 kgf·m, 10 lbf·ft)

Connect the shift control motor 2P (Black) connector [3].

Install the TR sensor (page 11-58).

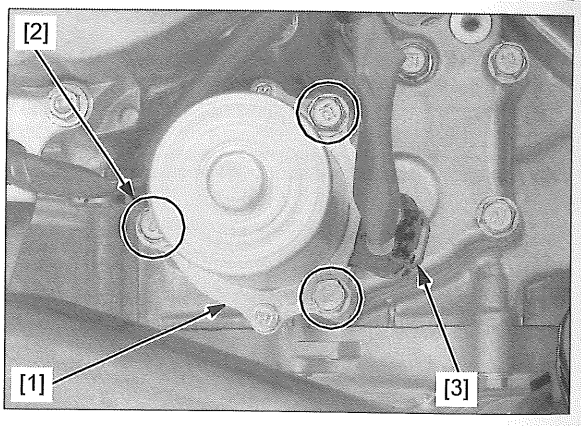

GEARSHIFT LINKAGE

REMOVAL

Remove the following:

- Shift control motor/reduction gears (page 11-52)
- Dual clutch (page 11-46)

Remove the gearshift spindle [1] and washer [2].

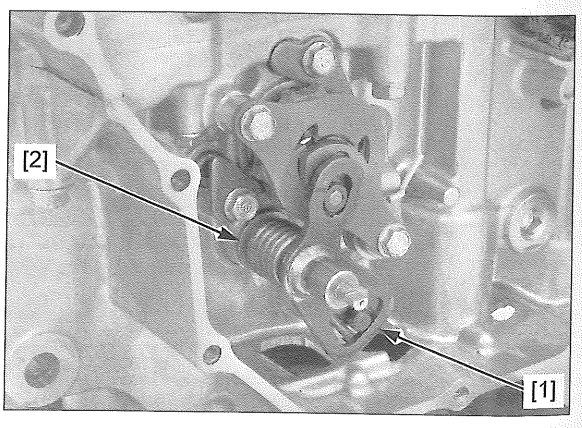

Remove the drum shifter collar [1].

Remove the bolts [2] and drum shifter guide plate/drum shifter assembly [3].

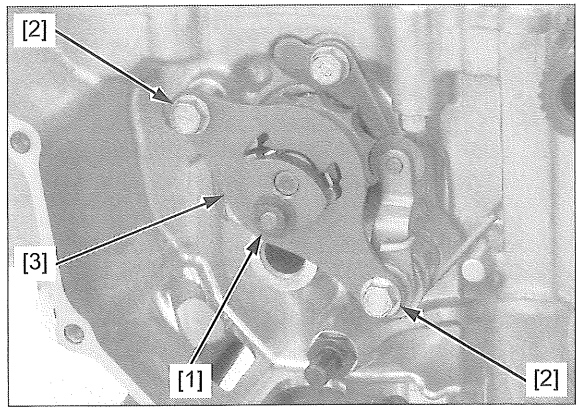

Remove the guide plate distance collar [1].

Remove the stopper arm side collar [2].

Remove the shift drum center bolt [3] and shift drum center [4].

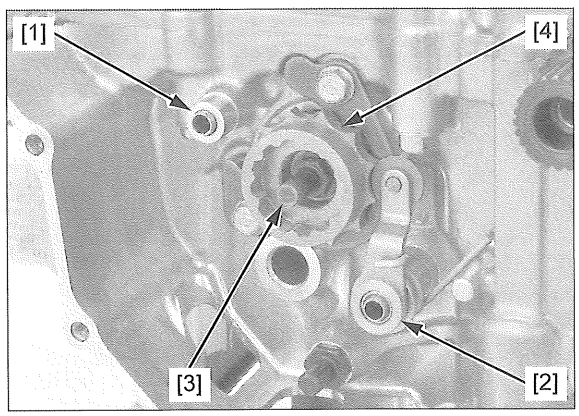

Remove the following:

- Shift drum stopper arm [1]
- Stopper arm return spring [2]
- Stopper arm distance collar [3]
- Shift drum center dowel pin [4]

Remove the 8 x 20 mm dowel pins [5] if necessary.

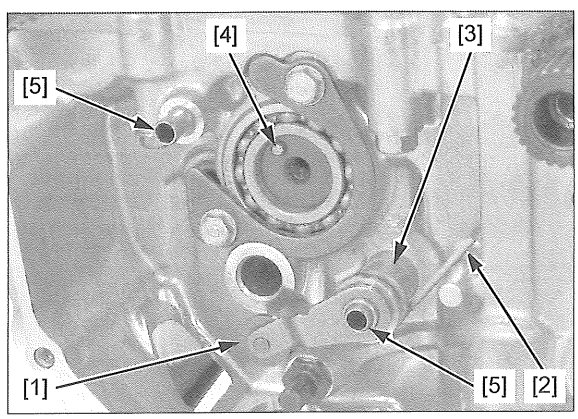

INSPECTION

Inspect the following parts for scratch, damage, abnormal wear, or deformation.

- Gearshift spindle, spindle arm, return spring
- Drum shifter guide plate
- Drum shifter
- Ratchet pawls
- Plungers
- Plunger springs

Replace if necessary.

INSTALLATION

Install the following:

- 8 x 20 mm dowel pins [1]
- Shift drum center dowel pin [2]
- Stopper arm distance collar [3]
- Stopper arm return spring [4]
- Shift drum stopper arm [5]

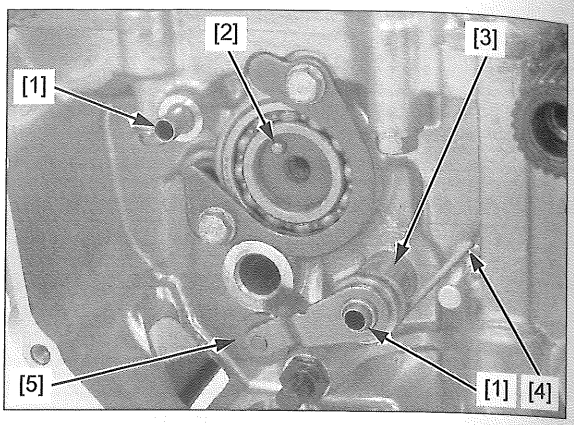

Hold the shift drum stopper arm [1] with a screwdriver and install the shift drum center [2].

NOTE:

- Align the groove with the dowel pin.

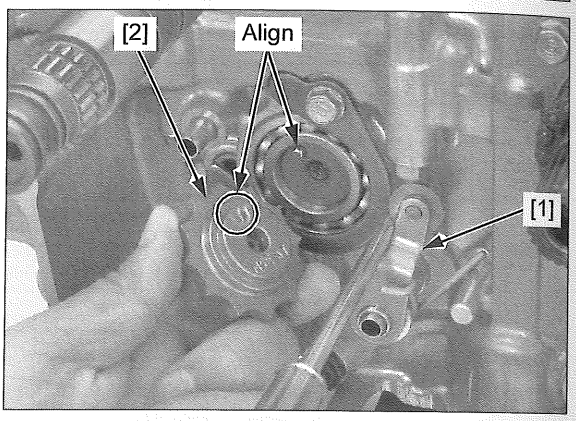

Apply locking agent to the threads of the shift drum center bolt [1] (page 1-15).

Install and tighten the shift drum center bolt to the specified torque.

TORQUE: 31 N·m (3.2 kgf·m, 23 lbf·ft)

Install the stopper arm side collar [2] and guide plate distance collar [3].

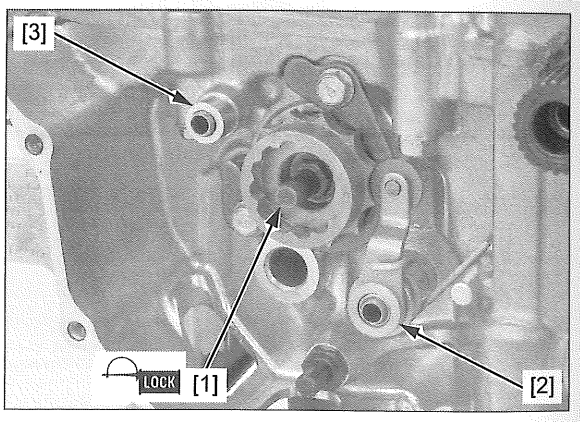

Install the plunger springs [1], plungers [2], and ratchet pawls [3] into the drum shifter [4] and set them in the drum shifter guide plate [5].

NOTE:

- Install the ratchet pawls by aligning its grooves with the plungers.

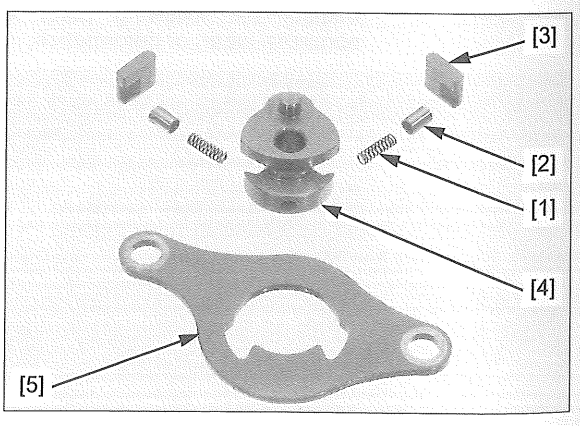

Install the drum shifter guide plate/drum shifter assembly [1].

Apply locking agent to the threads of the guide plate bolts [2] (page 1-15).

Install the guide plate bolts and tighten them.

TORQUE: 12 N·m (1.2 kgf·m, 9 lbf·ft)

Install the drum shifter collar [3] onto the drum shifter.

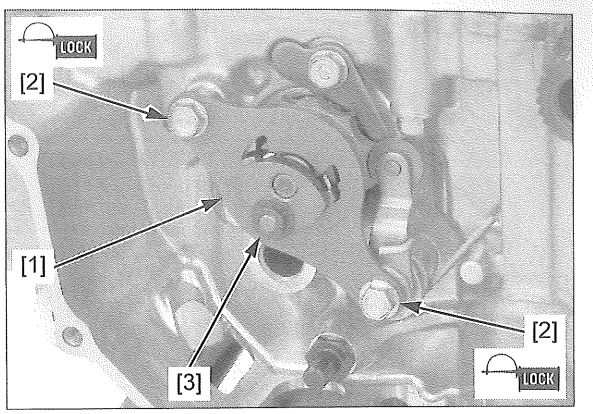

Install the washer [1] onto the gearshift spindle [2].

Install the gearshift spindle.

NOTE:
- Align the return spring ends with spring pin [3].
- Align the spindle arm hole with the drum shifter collar [4].

Install the following:

– Dual clutch (page 11-50)
– Reduction gears/shift control motor (page 11-53)

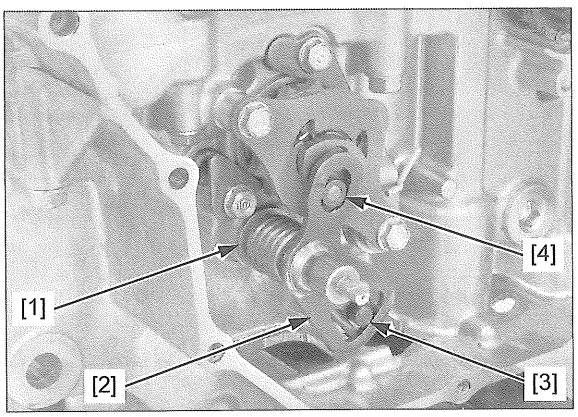

MAINSHAFT SENSOR

NOTE:
- The following parts are the same:
  – Inner mainshaft sensor
  – Outer mainshaft sensor
  – VS sensor

REMOVAL/INSTALLATION

Remove the heat guard (page 2-24).

Inner mainshaft sensor: Disconnect the inner mainshaft sensor 3P (Black) connector [1].

Remove the inner mainshaft sensor bolt [2] and inner mainshaft sensor [3].

Remove the O-ring [4] from the inner mainshaft sensor.

Outer mainshaft sensor: Disconnect the outer mainshaft sensor 3P (Black) connector [5].

Remove the outer mainshaft sensor bolt [6] and outer mainshaft sensor [7].

Remove the O-ring [8] from the outer mainshaft sensor.

Installation is in the reverse order of removal.

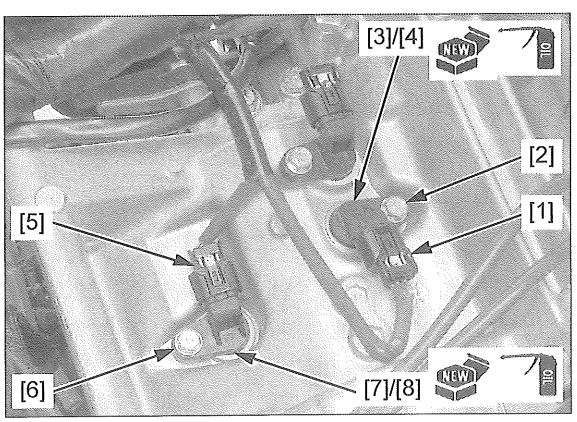

TORQUE:
Inner mainshaft sensor bolt:
12 N·m (1.2 kgf·m, 9 lbf·ft)
Outer mainshaft sensor bolt:
12 N·m (1.2 kgf·m, 9 lbf·ft)

NOTE:
- Replace the O-ring with a new one.
- Apply engine oil to a new O-ring.

TR SENSOR

REMOVAL/INSTALLATION

Remove the left step panel/side panel (page 2-18).

Release the TR sensor 3P connector [1] from the stay and disconnect it.

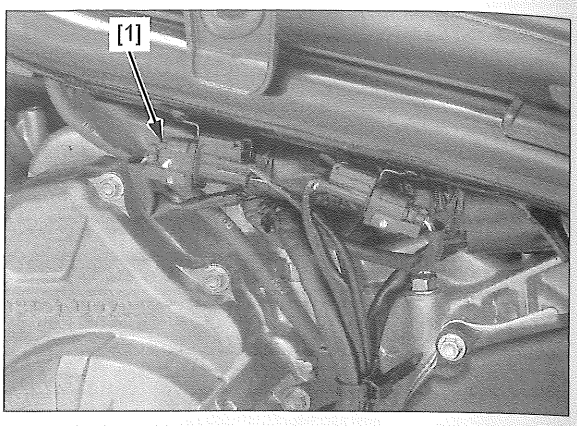

Remove the wire band [1].

Release the TR sensor wire [2] from the stay [3].

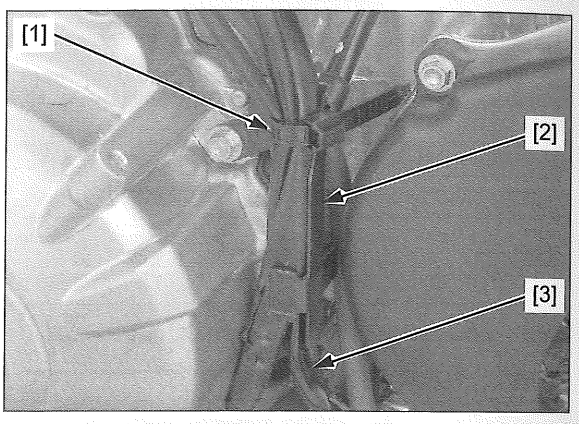

Remove the bolt [1], wire clip stay [2] and TR sensor wire clip [3].

Remove the TR sensor [4].

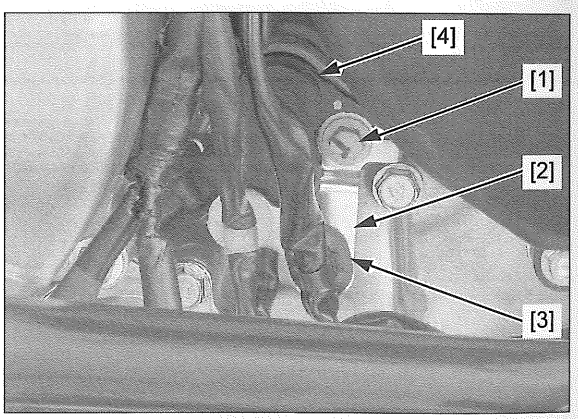

Remove the O-ring [1] from the TR sensor.

Installation is in the reverse order of removal.

TORQUE:

TR sensor bolt:

12 N·m (1.2 kgf·m, 9 lbf·ft)

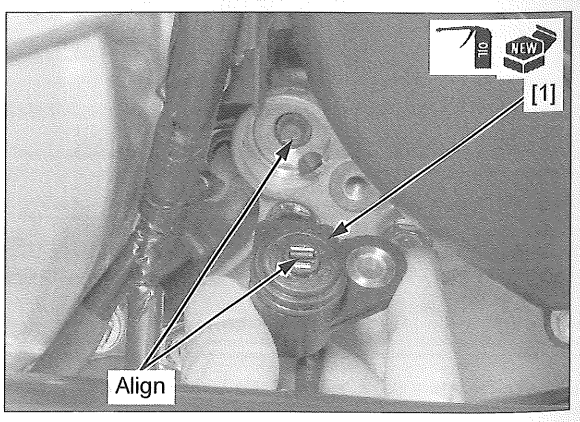

NOTE:

- Always replace the O-ring with a new one.
- Apply engine oil to a new O-ring.
- Align the flat surfaces of the TR sensor and shift drum end.
- Route the hoses and wires properly (page 1-20).

SHIFT SPINDLE ANGLE SENSOR

REMOVAL/INSTALLATION

Remove the right step panel/side panel (page 2-18).

Disconnect the shift spindle angle sensor 3P connector [1].

Release the wire clip [2] from the wire clip stay.

Remove the shift spindle angle sensor bolt [3] and shift spindle angle sensor [4].

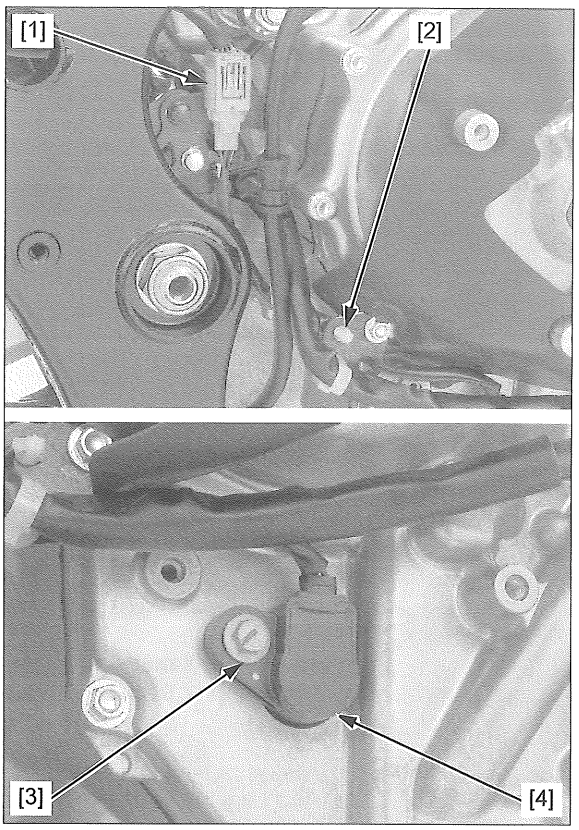

Remove the O-ring [1] from the shift spindle angle sensor [2].

Installation is in the reverse order of removal.

TORQUE:

Shift spindle angle sensor bolt:
12 N·m (1.2 kgf·m, 9 lbf·ft)

NOTE:

- Always replace the O-ring with a new one.
- Apply engine oil to a new O-ring.
- Align the flat surfaces of the shift spindle angle sensor and gearshift spindle end.
- Route the hoses and wires properly (page 1-20).

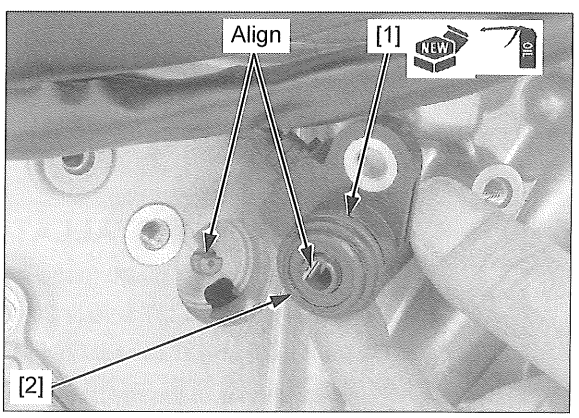

CLUTCH EOP SENSOR

NOTE:

- The following parts are the same:
  - No.1 clutch EOP sensor
  - No.2 clutch EOP sensor
  - Clutch line EOP sensor

REMOVAL/INSTALLATION

Remove the right step panel/side panel (page 2-18).

Disconnect the following:

- No.2 clutch EOP sensor 3P (Gray) connector [1]
- Clutch line EOP sensor 3P (Black) connector [2]
- No.1 clutch EOP sensor 3P (Gray) connector [3]

Remove the clutch EOP sensors [4] and O-rings [5].

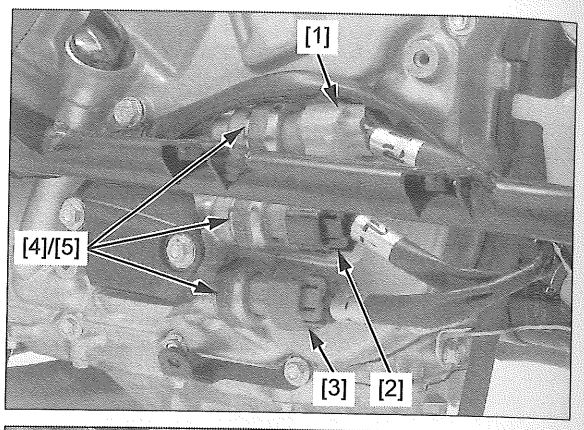

Installation is in the reverse order of removal.

TORQUE:
Clutch EOP sensor:
19.6 N·m (2.0 kgf·m, 14 lbf·ft)

NOTE:

- Always replace the O-ring [1] with a new one.
- Apply engine oil to a new O-ring.
- Each sensor wires has the following identification mark:
  - 2: No.2 clutch (upper) EOP sensor
  - P: Clutch line (middle) EOP sensor
  - 1: No.1 clutch (lower) EOP sensor

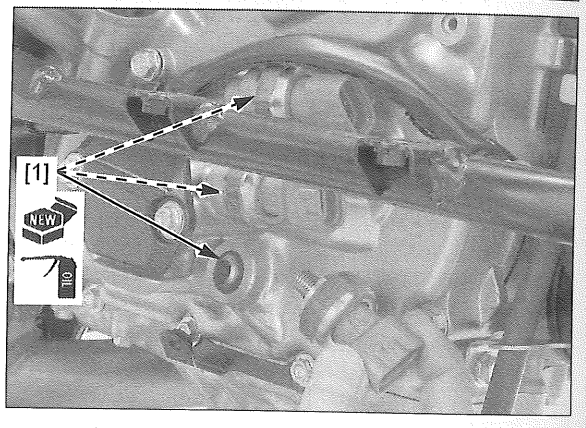

EOT SENSOR

REMOVAL/INSTALLATION

Remove the heat guard (page 2-24).

Disconnect the EOT sensor 2P (Black) connector [1].

Remove the EOT sensor [2] and sealing washer [3].

Installation is in the reverse order of removal.

TORQUE:
EOT sensor:
14 N·m (1.4 kgf·m, 10 lbf·ft)

NOTE:

- Always replace the sealing washer with a new one.
- Apply engine oil to the EOT sensor threads and seating surface.

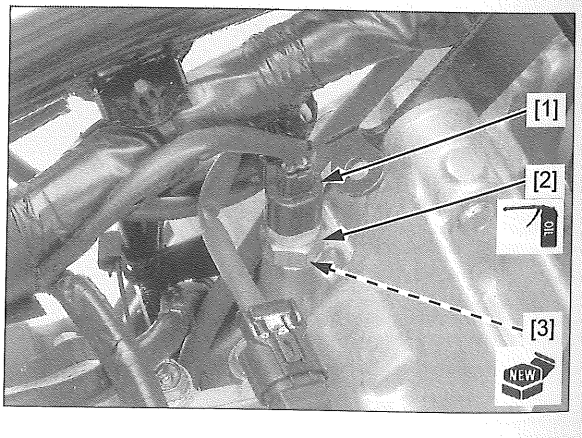

NEUTRAL SWITCH

REMOVAL/INSTALLATION

Drain the engine oil (page 3-10).

Remove the shift control motor/reduction gears (page 11-52).

Disconnect the neutral switch connector [1].

Remove the neutral switch [2] and sealing washer [3].

Install the neutral switch with a new sealing washer.

Tighten the neutral switch to the specified torque.

TORQUE: 12 N·m (1.2 kgf·m, 9 lbf·ft)

Connect the neutral switch connector.

Install the shift control motor/reduction gears (page 11-53).

Fill the engine with the recommended engine oil (page 3-10).

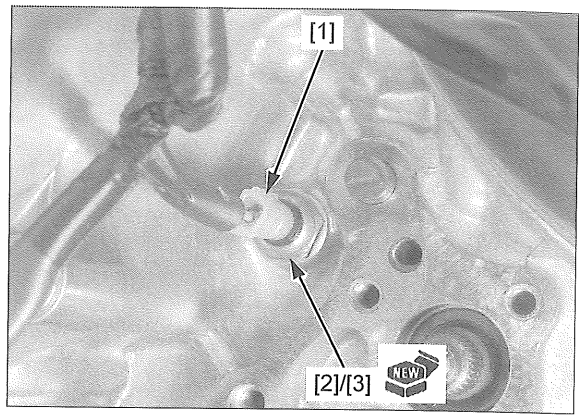

TCM

POWER/GROUND LINE INSPECTION

POWER INPUT LINE

Disconnect the TCM 33P (Black) connector (page 4-55).

Temporarily install the ignition switch.

Turn the ignition switch ON.

Measure the voltage between the wire harness side 33P (Black) connector [1] and ground.

TOOL:
Test probe **07ZAJ-RDJA110**

CONNECTION: A7 (+) – Ground (–)

There should be battery voltage.

If there is no voltage, check the following:

- Open circuit in the Black wire between the TCM and FI 2 fuse (10 A)
- Blown FI 2 fuse (10 A)

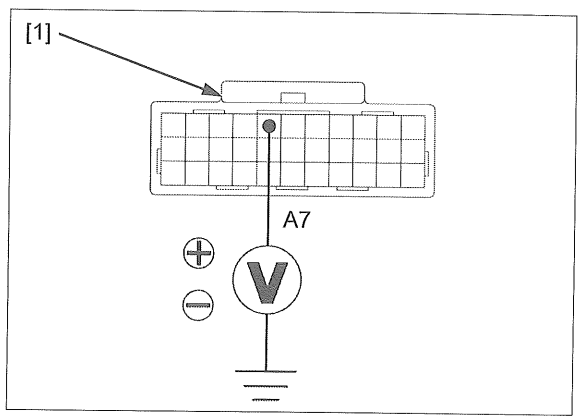

POWER GROUND LINE

Disconnect the TCM 33P (Black) connector (page 4-55).

Check for continuity between the wire harness side 33P (Black) connector [1] and ground.

TOOL:
Test probe **07ZAJ-RDJA110**

CONNECTION: A23 – Ground
A24 – Ground

There should be continuity at all times.

If there is no continuity, check for an open circuit in the Green wires.

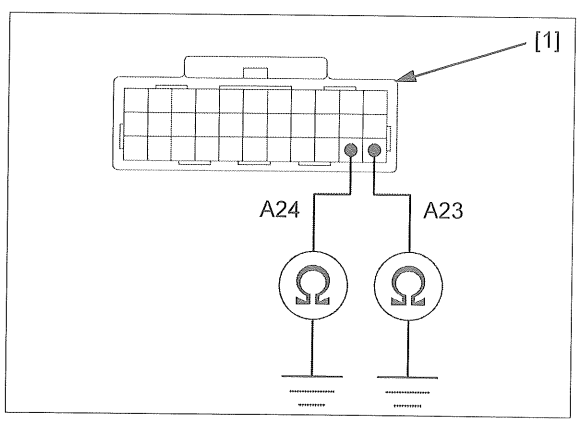

LOGIC GROUND LINE

Disconnect the TCM 33P (Black) connector (page 4-55).

Check for continuity between the wire harness side 33P (Black) connector [1] and ground.

TOOL:
Test probe **07ZAJ-RDJA110**

CONNECTION: A11 – Ground

There should be continuity at all times.

If there is no continuity, check for an open circuit in the Green wire.

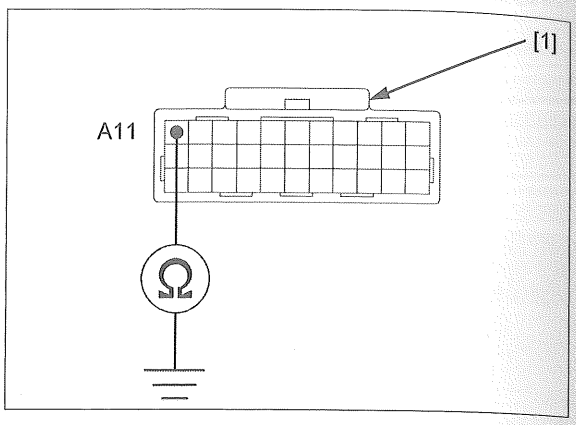

CLUTCH INITIALIZE LEARNING (TCM)

NOTE:

- If the TCM and/or clutch assembly are replaced, perform this procedure.
- Before starting this procedure, check the following:
  – PGM-FI system and DCT system have no DTC.
  – Engine idle speed is normal.
  – Transmission is in neutral and cooling fan stops.
- Do not operate the throttle during clutch initialize learning

1. Warm up the engine to the normal operating temperature (engine oil temperature: 50 – 110°C/ 122 – 230°F) and stop it.

NOTE:

- If the TCM is replaced with a new one, the level ring [1] of the DCT mode indicator will display as shown to indicate that the clutch initialization learning procedure is necessary when the ignition switch is turned on.
  Furthermore, if the "TOO LOW" (extremely low oil temperature) [2], or "LOW" (low oil temperature) [3] is displayed on the shift indicator, the engine must be warmed before proceeding.

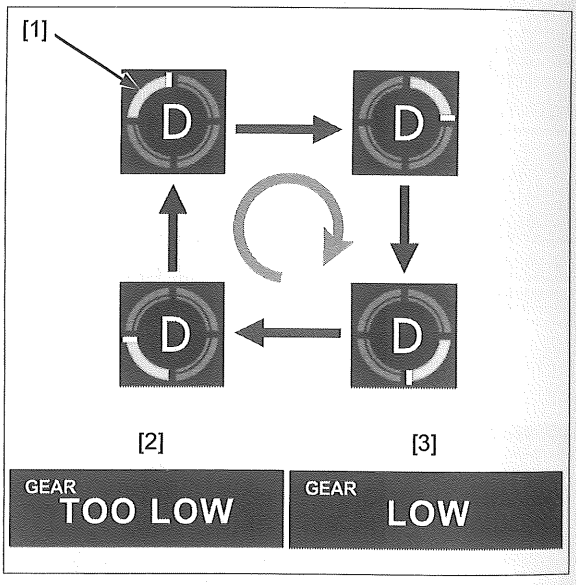

2. Turn the ignition switch ON while pushing the D switch [1] of the N-D switch. The MIL will come on.

   Release the D switch after the MIL goes off.

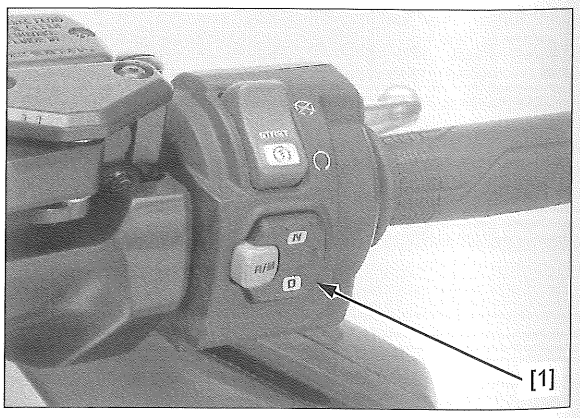

3. Operate the N-D switch [1] in the sequence as follows:

– Push the D switch
– Push the D switch
– Push the N switch
– Push the D switch
– Push the N switch

The "–" [2] is displayed on the shift indicator and blinks at interval of 0.5 seconds.

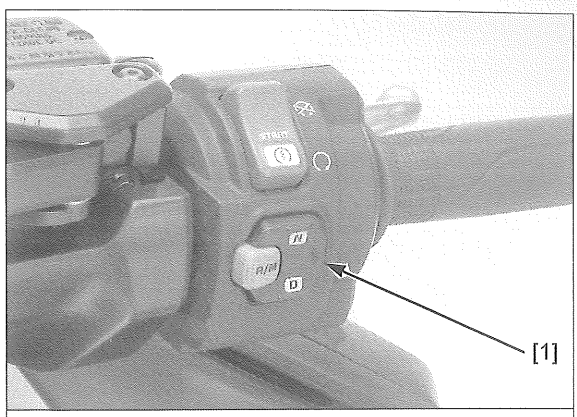

NOTE:

- When the engine is not warmed up enough, the "TOO LOW" [3] (extremely low oil temperature) or "LOW" [4] (low oil temperature) is displayed on the shift indicator. If so, warm up the engine until the "LOW" on the shift indicator goes off. Stop the engine and perform steps 2 and 3 again.

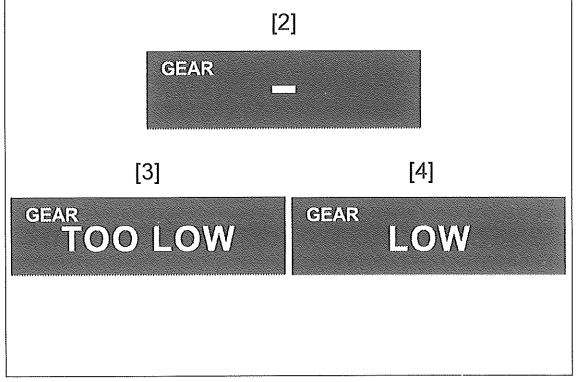

4. Start the engine and let it idle. The "–" [1] on the shift indicator continues blinking at interval of 0.5 seconds. The Clutch Initialize Learning is successful when the "N" [2] is displayed on the shift indicator.

NOTE:

- If the clutch initialize learning is unsuccessful, try it again from step 2.

5. Stop the engine.

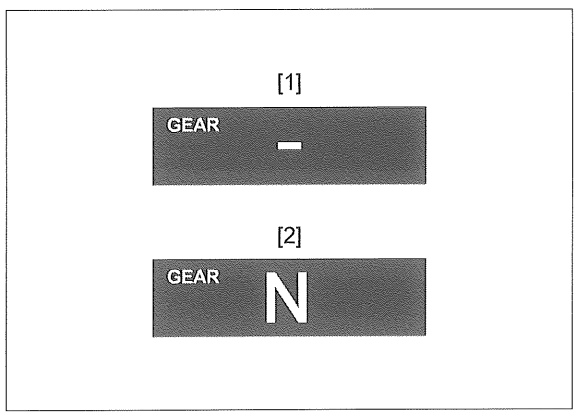

12. ALTERNATOR/STARTER CLUTCH

SERVICE INFORMATION 12-2

TROUBLESHOOTING 12-2

COMPONENT LOCATION 12-2

ALTERNATOR COVER 12-3

FLYWHEEL 12-4

STARTER CLUTCH 12-7

STATOR 12-9

SERVICE INFORMATION

GENERAL

- This section covers service of the alternator and starter clutch. All service can be done with the engine installed in the frame.
- For alternator inspection (page 20-8).
- For CKP sensor inspection (page 5-6).
- For starter motor service (page 6-5).

TROUBLESHOOTING

Starter motor turns, but engine does not turn

- Faulty starter clutch
- Damaged starter reduction gear/shaft
- Damaged starter idle gear/shaft
- Damaged or faulty starter motor pinion gear
- Damaged starter driven gear

COMPONENT LOCATION

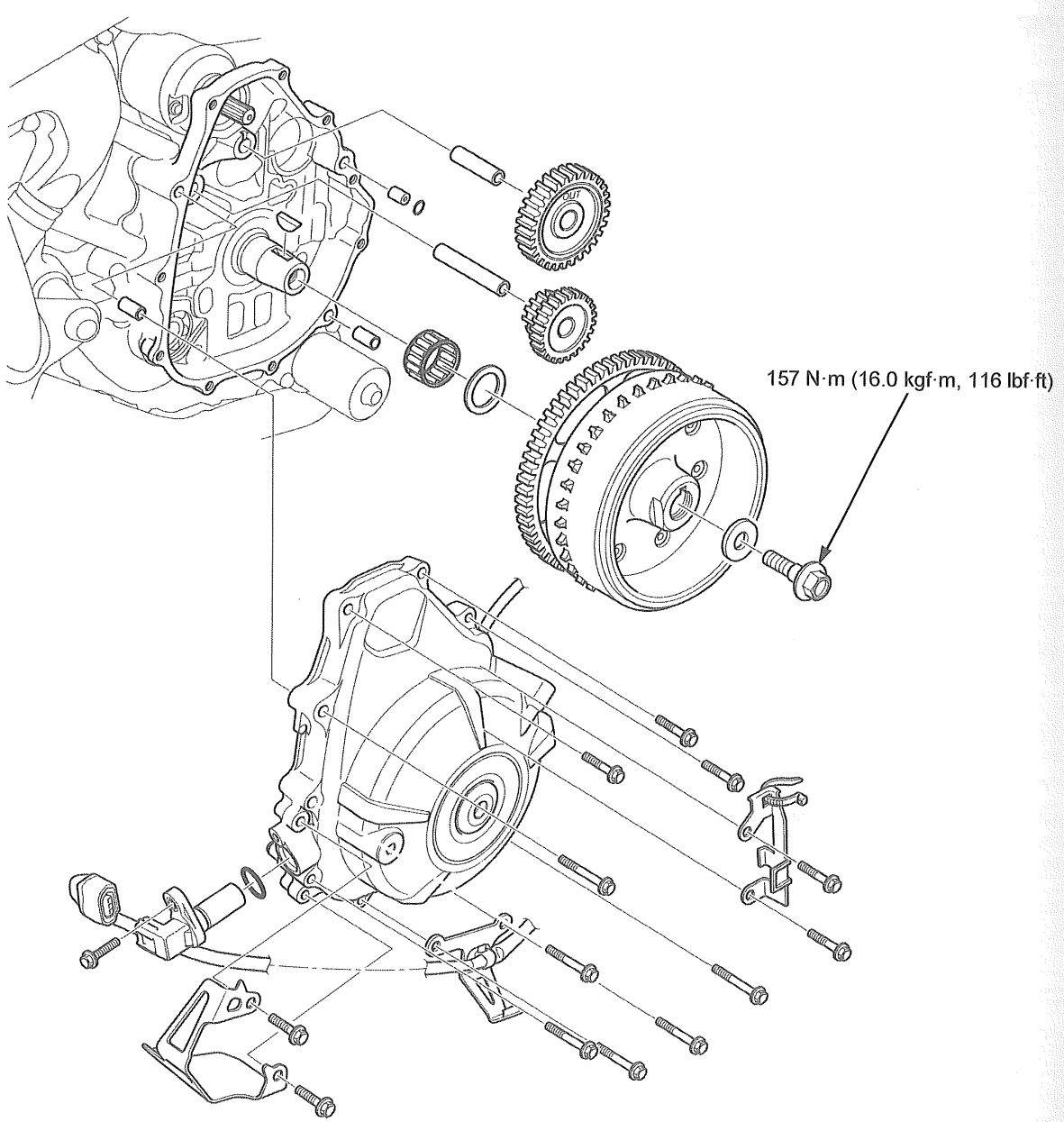

ALTERNATOR COVER

REMOVAL/INSTALLATION

Drain the engine oil (page 3-10).

Remove the following:

- Heat guard (page 2-24)
- CKP sensor (page 4-60)
- Horn (page 21-20)

Disconnect the alternator 3P (Gray) connector [1].

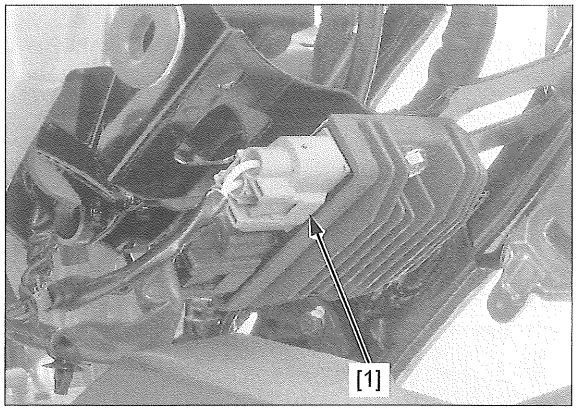

Remove the socket bolt [1].

Release the wire clip [2] from the harness guard [3].

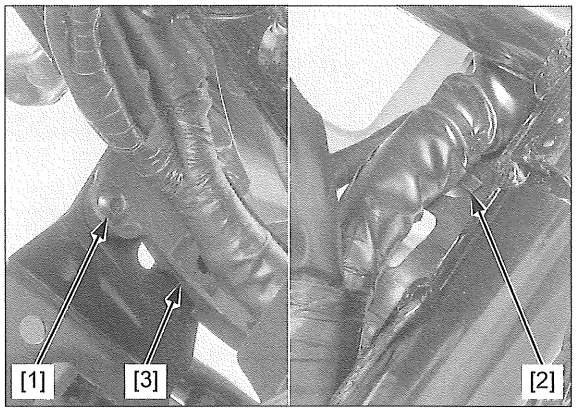

Remove the bolts [1], left floor stay [2] and horn stay [3].

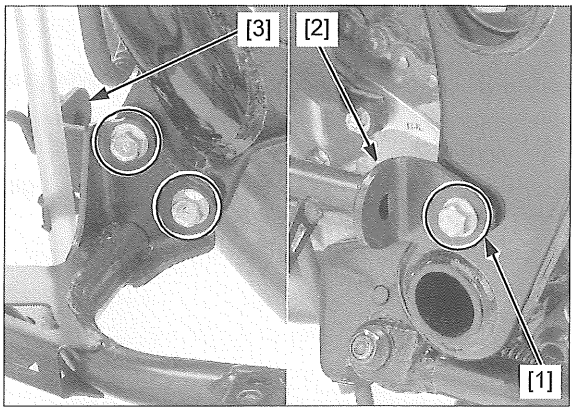

Loosen the alternator cover bolts [1] in a crisscross pattern in 2 or 3 steps.

Remove the following:

- Alternator cover bolts
- Stays [2]
- Alternator cover [3]

NOTE:

- The alternator cover (stator) is magnetically attracted to the flywheel, be careful during removal.

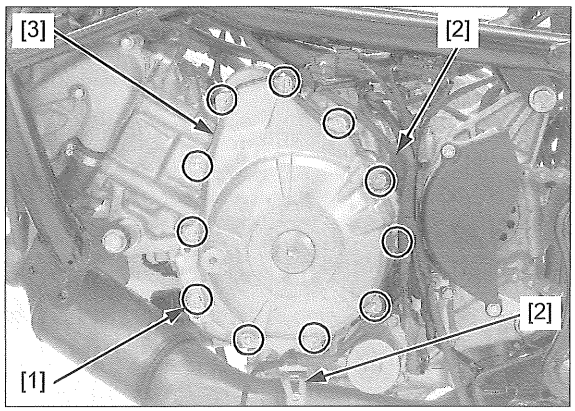

Remove the following:

- Dowel pins [1]
- Oil orifice [2]
- O-ring [3]

Clean off any sealant from the alternator cover mating surfaces.

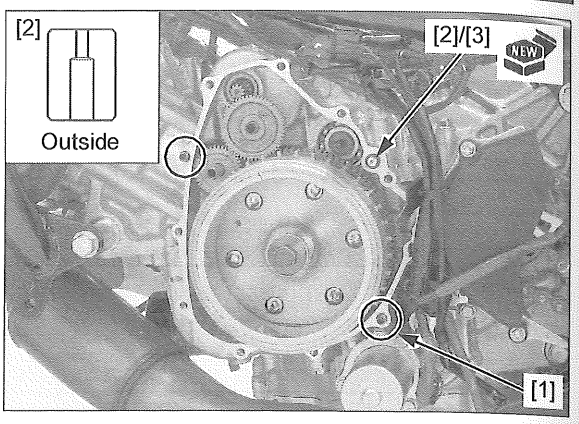

Installation is in the reverse order of removal.

TORQUE:
Left floor stay socket bolt:
32 N·m (3.3 kgf·m, 24 lbf·ft)

NOTE:

- Always replace the O-ring with a new one.
- Apply liquid sealant (TB1207B manufactured by Three bond or equivalent) to the alternator cover mating surface as shown.
- Apply liquid sealant (TB1207B manufactured by Three bond or equivalent) to the alternator wire grommet sealing surface.
- Do not apply more liquid sealant than necessary.
- Route the hoses and wires properly (page 1-20).

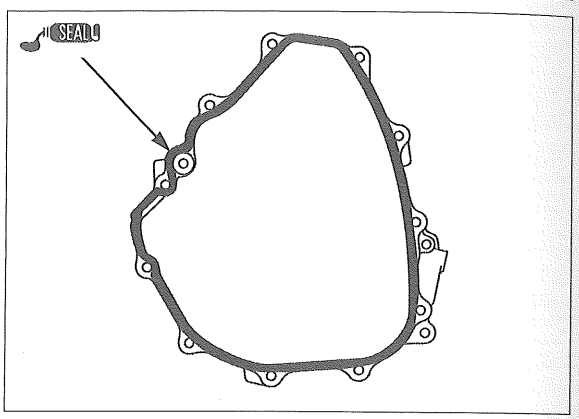

Fill the engine oil (page 3-9).

FLYWHEEL

REMOVAL

Remove the alternator cover (page 12-3).

Remove the starter idle gear shaft [1] and starter idle gear [2].

Remove the starter reduction gear shaft [3] and starter reduction gear [4].

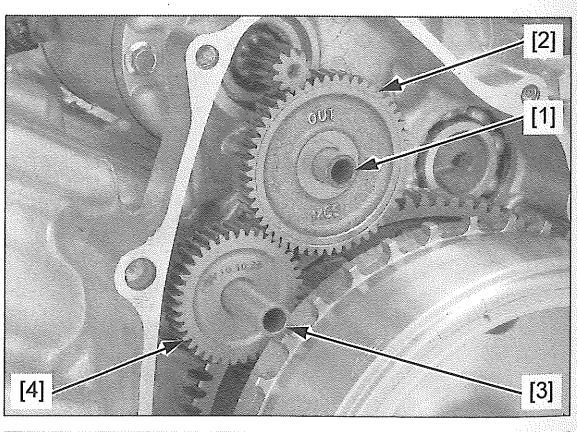

Hold the flywheel [1] using the special tool.

TOOL:
Flywheel holder [2] **07725-0040001**

Loosen the flywheel mounting bolt [3].

NOTE:

- The flywheel mounting bolt has left hand threads.

Remove the flywheel mounting bolt and washer [4].

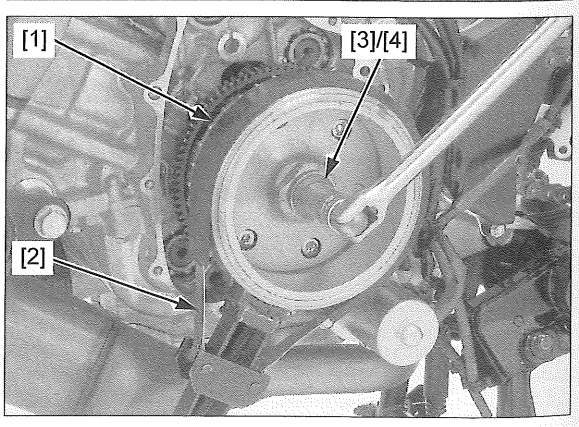

Remove the flywheel [1] using the special tool.

TOOL:
Rotor puller [2] **07933-3290001**

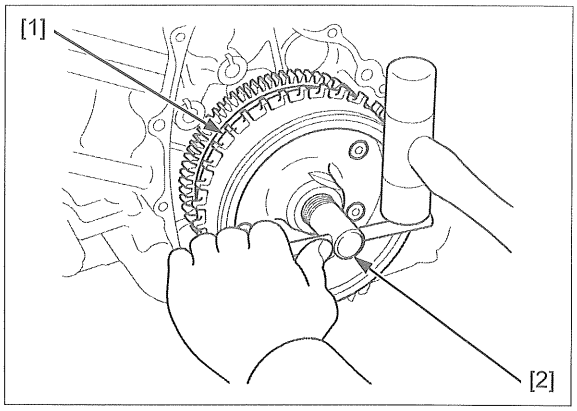

Remove the washer [1] and needle bearing [2].

Remove the woodruff key [3].

NOTE:

- Be careful not to damage the key groove and crankshaft.

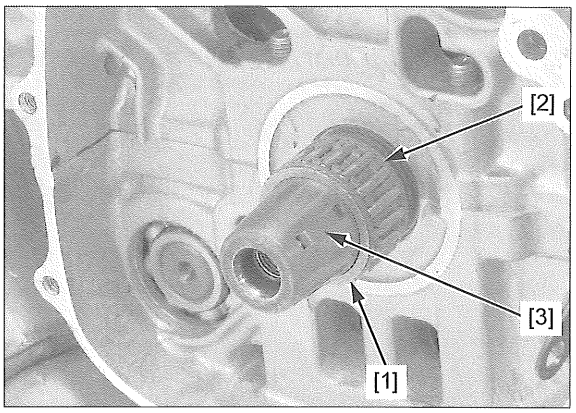

INSPECTION

Inspect the following parts for scratch, damage, abnormal wear, or deformation.

- Starter idle gear shaft
- Starter idle gear
- Starter reduction gear shaft
- Starter reduction gear
- Woodruff key
- Needle bearing

Replace if necessary.

INSTALLATION

Install the woodruff key [1].

NOTE:

- Be careful not to damage the key groove and crankshaft.

Apply engine oil to the needle bearing rotating area.

Install the needle bearing [2] and washer [3].

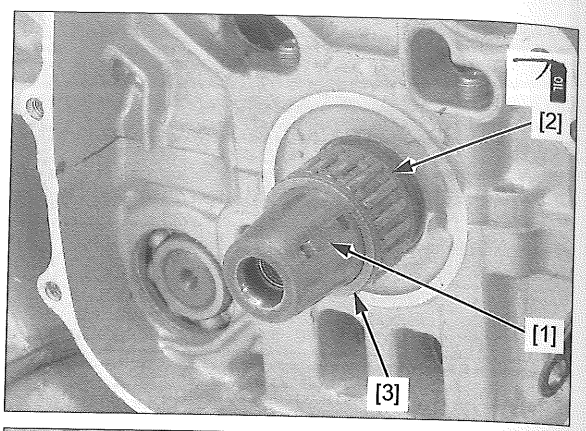

Clean any oil from the crankshaft tapered area and flywheel thoroughly.

Install the flywheel [1] to the crankshaft.

NOTE:

- Align the woodruff key with flywheel keyway.

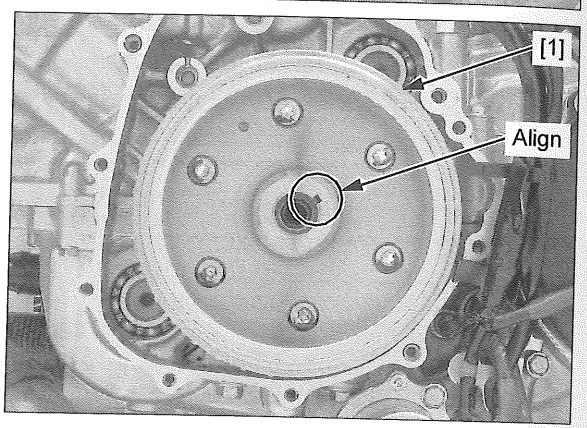

Apply engine oil to the flywheel mounting bolt threads and seating surface.

Install the washer [1] and flywheel mounting bolt [2].

Hold the flywheel [3] using the special tool.

TOOL:

Flywheel holder [4] **07725-0040001**

Tighten the flywheel mounting bolt to the specified torque.

TORQUE: 157 N·m (16.0 kgf·m, 116 lbf·ft)

NOTE:

- The flywheel mounting bolt has left hand threads.

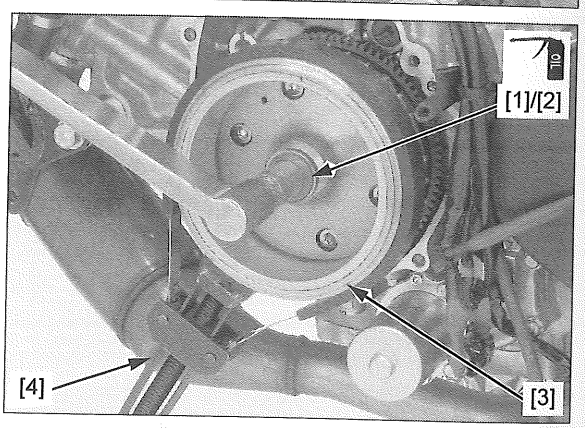

Apply molybdenum oil solution to the starter reduction gear and idle gear shaft outer surfaces.

Install the starter reduction gear [1] and shaft [2].

Install the starter idle gear [3] and shaft [4].

NOTE:

- Install the starter idle gear with its "OUT" mark [5] facing out.

Install the alternator cover (page 12-3).

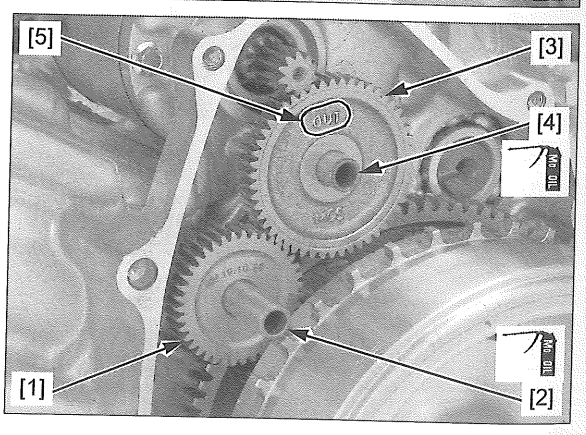

STARTER CLUTCH

REMOVAL

Remove the flywheel (page 12-4).

Remove the starter driven gear [1] while turning the starter driven gear counterclockwise.

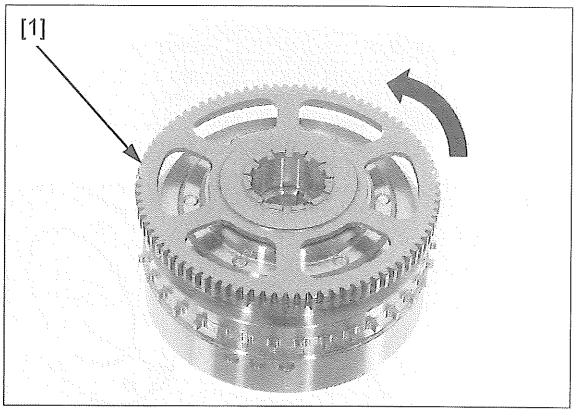

Hold the flywheel [1] using the special tool.

TOOL:
Flywheel holder [2] **07725-0040001**

Remove the starter clutch socket bolt [3].

NOTE:
- Do not damage the flywheel reluctors [4].

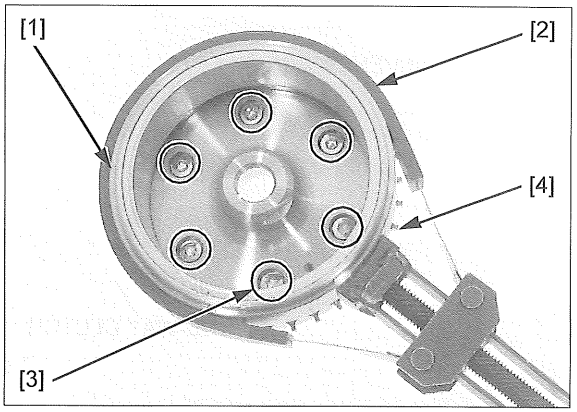

Remove the starter clutch assembly.

Remove the starter one-way clutch [1] from the starter clutch outer [2].

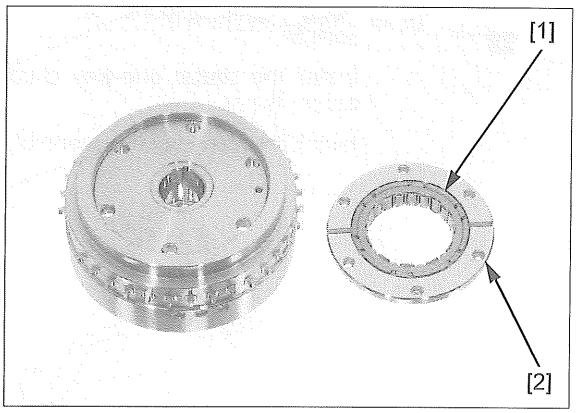

INSPECTION

Inspect the following parts for scratch, damage, abnormal wear, or deformation.

- Starter driven gear
- Starter clutch outer
- Starter one-way clutch

Measure each part according to ALTERNATOR/ STARTER CLUTCH SPECIFICATIONS (page 1-6).

Replace any part if it is out of service limit.

INSTALLATION

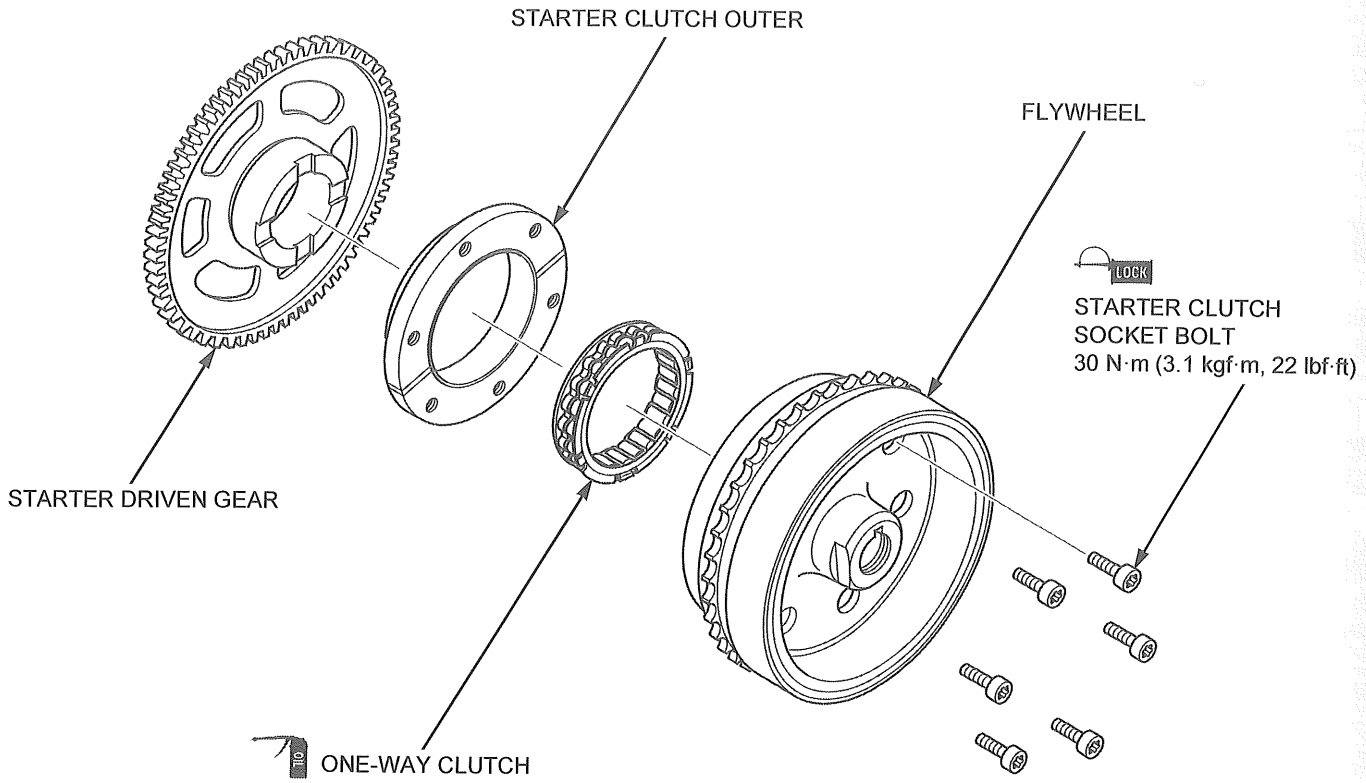

Apply engine oil to the starter one-way clutch [1] sliding surface.

Install the starter one-way clutch to the starter clutch outer [2].

Install the starter clutch assembly.

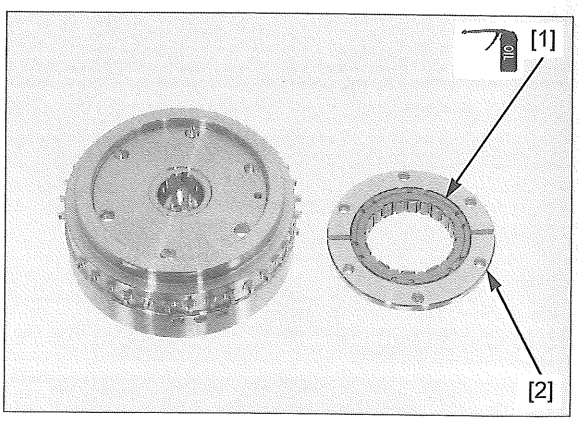

Hold the flywheel [1] using the special tool.

TOOL:
Flywheel holder [2] 07725-0040001

Apply locking agent to the starter clutch socket bolt threads (page 1-15).

Install and tighten the starter clutch socket bolt [3] to the specified torque.

TORQUE: 30 N·m (3.1 kgf·m, 22 lbf·ft)

NOTE:

- Do not damage the flywheel reluctors [4].

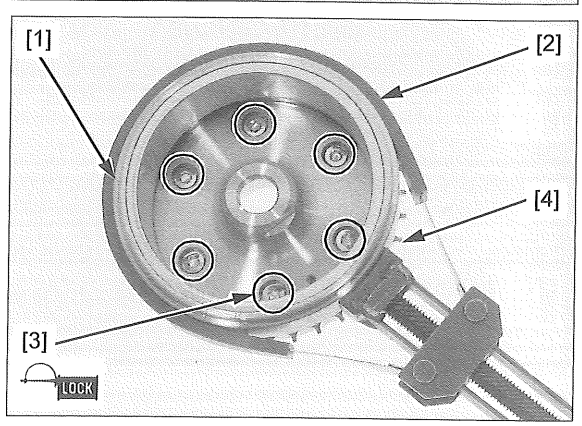

Install the starter driven gear [1] into the starter clutch outer while turning the starter driven gear counterclockwise.

Recheck the one-way clutch operation.

Install the flywheel (page 12-6).

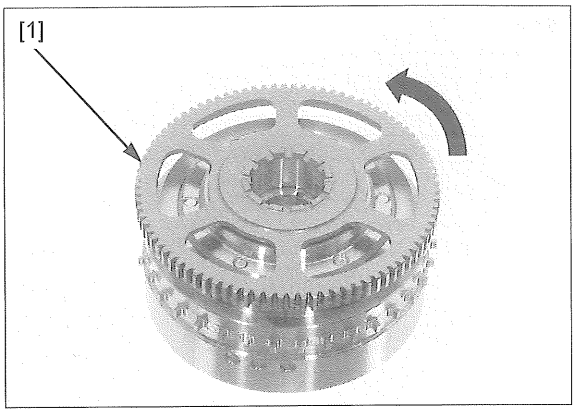

STATOR

REMOVAL/INSTALLATION

Remove the alternator cover (page 12-3).

Installation is in the reverse order of removal.

NOTE:

- Apply locking agent to the alternator stator mounting bolt and alternator wire clamp bolt threads (page 1-15).
- Apply liquid sealant (TB1207B manufactured by Three Bond or equivalent) to the alternator wire grommet sealing surface.

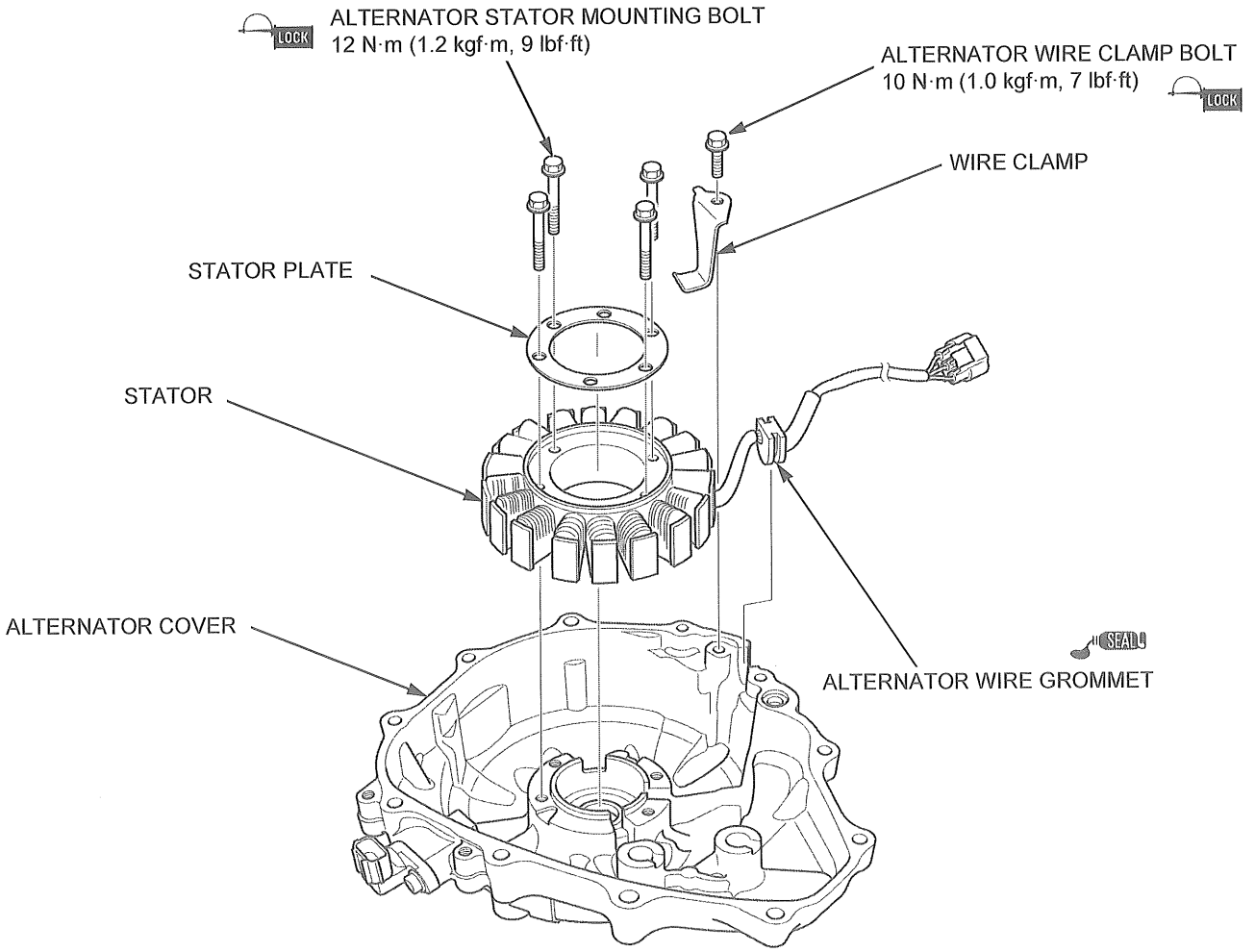

13. CRANKCASE/TRANSMISSION/BALANCER

SERVICE INFORMATION 13-2

TROUBLESHOOTING 13-2

COMPONENT LOCATION 13-3

CRANKCASE SEPARATION 13-4

TRANSMISSION 13-5

BALANCER 13-12

CRANKCASE ASSEMBLY 13-15

SERVICE INFORMATION

GENERAL

- The crankcase must be separated to service the following:
  - Transmission
  - Balancer
  - Crankshaft (page 14-4)
  - Piston/cylinder (page 14-12)
- The following components must be removed before separating the crankcase:
  - Engine (page 15-4)
  - Engine oil filter (page 3-10)
  - EOP switch (page 21-14)
  - Starter motor (page 6-5)
  - Cylinder head (page 10-13)
  - Flywheel (page 12-4)
  - Shift control motor/reduction gears (page 11-52)
  - Neutral switch (page 11-61)
  - Dual clutch (page 11-46)
  - Primary drive gear/CKP sensor rotor (page 11-50)
  - Gearshift linkage (page 11-54)
  - Oil pump (page 9-4)
  - Mainshaft sensors (page 11-57)
  - VS sensor (page 4-57)
  - EOT sensor (page 11-60)
  - Oil strainer (page 9-6)
- Be careful not to damage the crankcase mating surfaces when servicing.
- Clean the oil passages before assembling the crankcase halves.
- Prior to assembling the crankcase halves, apply sealant to their mating surfaces. Wipe off excess sealant thoroughly.

TROUBLESHOOTING

Hard to shift
- Improper clutch operation
- Incorrect engine oil weight
- Bent shift fork
- Bent shift fork shaft
- Bent shift fork claw
- Damaged shift drum groove
- Bent gearshift spindle (page 11-54)

Transmission jumps out of gear
- Worn gear dogs
- Worn shift drum groove
- Bent shift fork shaft
- Worn or bent shift forks
- Broken shift drum stopper arm (page 11-54)
- Broken shift drum stopper arm return spring (page 11-54)
- Broken gearshift spindle return spring (page 11-54)

Excessive engine noise
- Worn or damaged transmission gear
- Worn or damaged transmission bearings

COMPONENT LOCATION

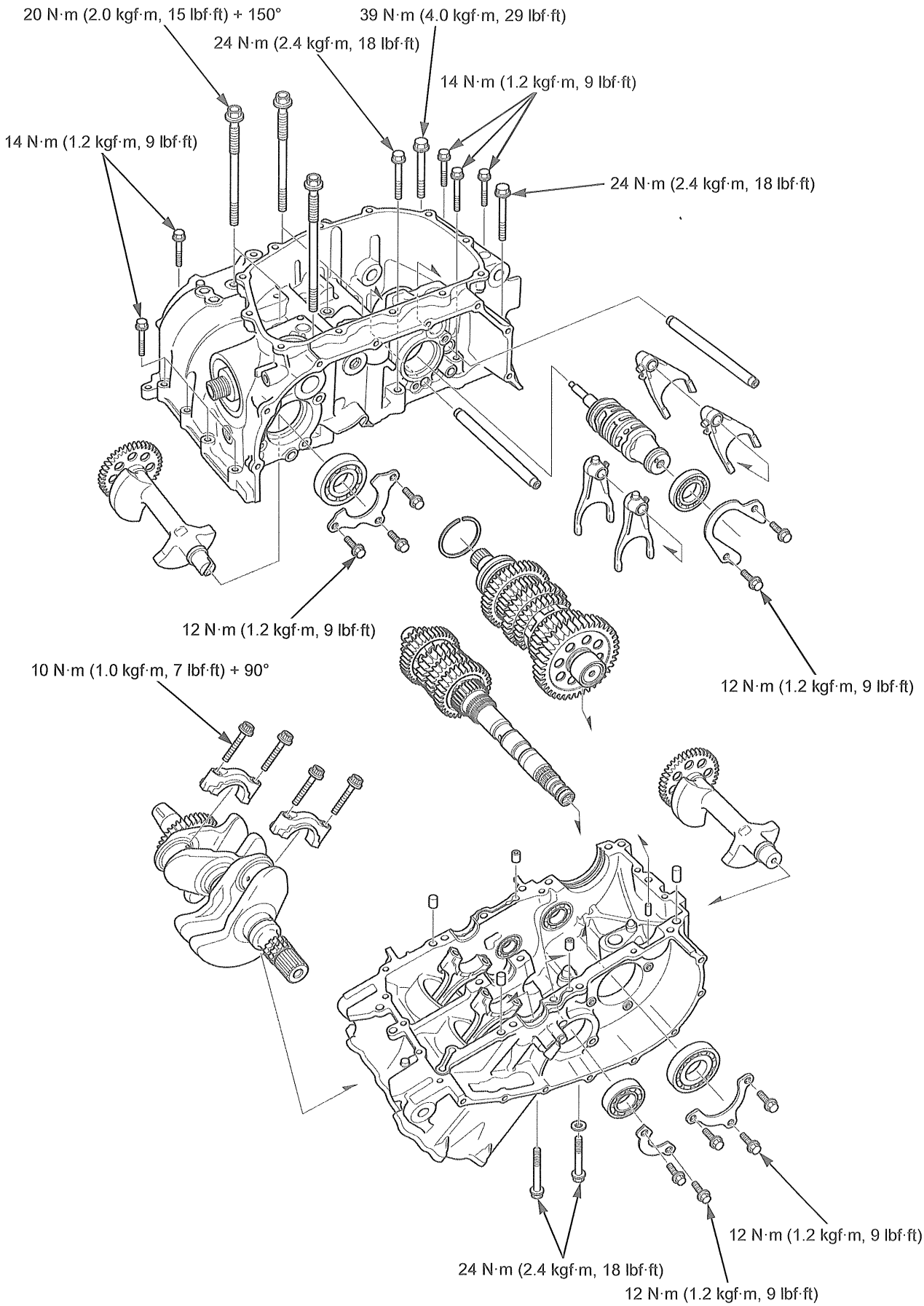

CRANKCASE SEPARATION

For Service Information for removal of the necessary parts before separating the crankcase (page 13-2).

Remove the cam chain [1].

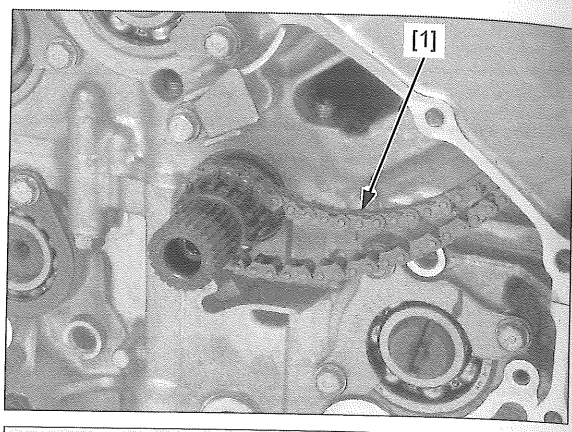

Remove the crankcase 8 x 100 mm bolt [1] and sealing washer [2].

Remove the crankcase 8 x 70 mm bolt [3].

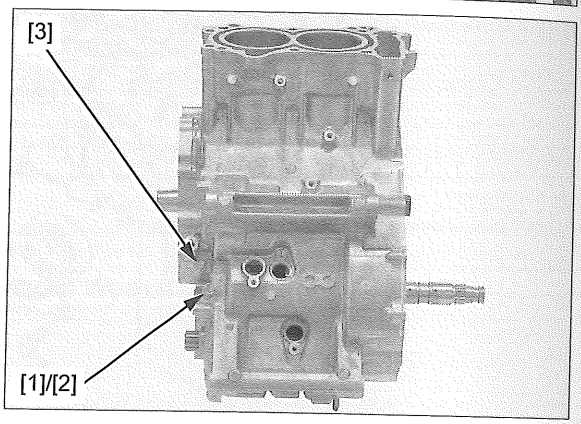

Place the engine upside down.

Loosen the crankcase 6 mm bolts [1] in a crisscross pattern in 2 or 3 steps.

Remove the crankcase 6 mm bolts.

Remove the following:

- 8 x 45 mm bolts [2]
- 8 x 70 mm bolts [3]
- 10 mm bolt [4]

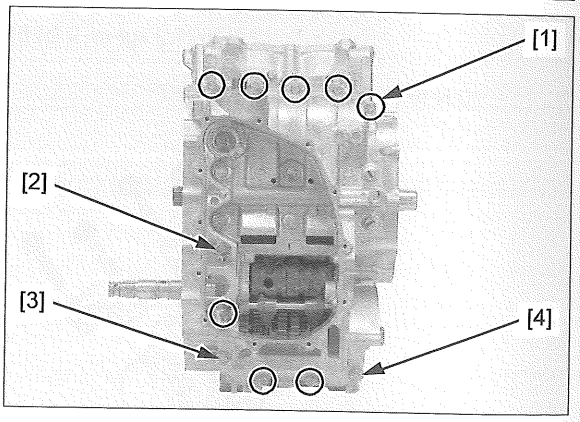

Loosen the crankcase main journal bolts [1] in a crisscross pattern in 2 or 3 step.

Remove the crankcase main journal bolts.

Separate the lower crankcase [2] from the upper crankcase.

NOTE:

- Do not pry the crankcase halves with a screwdriver.

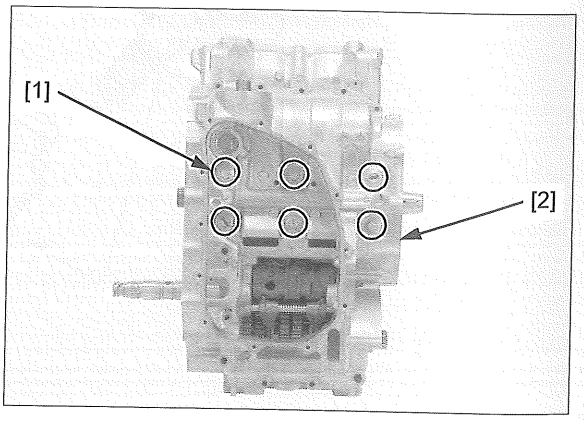

Remove the dowel pins [1] and oil orifices [2].

Clean any sealant off from the crankcase mating surface.

Clean the oil orifices in solvent thoroughly.

Check the oil orifices for clog, and replace them if necessary.

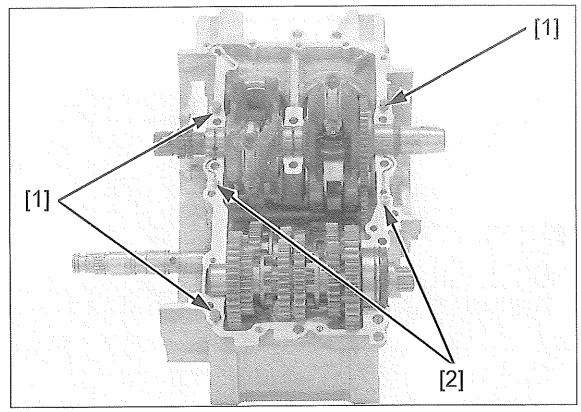

TRANSMISSION

REMOVAL

COUNTERSHAFT

Separate the crankcase halves (page 13-4).

Remove the countershaft assembly [1] from the upper crankcase.

Remove the dowel pin [2].

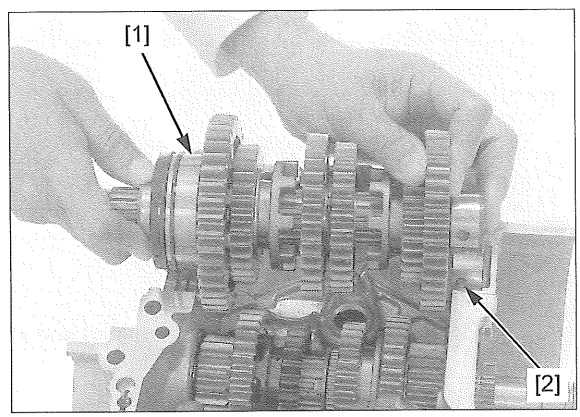

MAINSHAFT

Remove the countershaft (page 13-5).

Remove the mainshaft bearing set plate bolts [1] and set plate [2] from the upper crankcase.

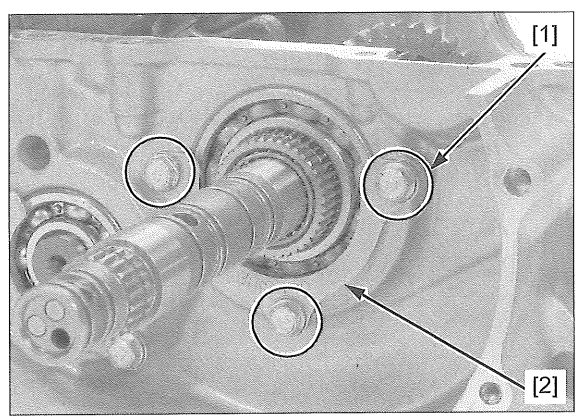

Remove the right mainshaft bearing [1].

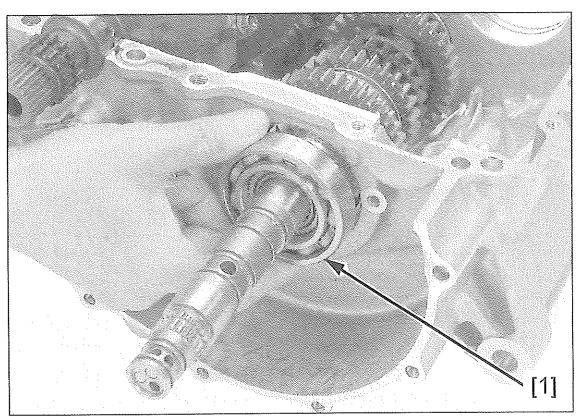

DISASSEMBLY/ASSEMBLY

NOTE:

- Do not expand the snap ring more than necessary for removal. To remove a snap ring, expand the snap ring and pull it off using the gear behind it.
- Keep track of the disassembled parts (gears, bushings, washers, and snap rings) by sliding them onto a tool or a piece of wire.
- Clean all parts in solvent and dry them thoroughly.
- Apply engine oil to the gear teeth, rotating surface, and bearing.
- Apply molybdenum oil solution to the spline bushing outer surfaces, bushing inner and outer surfaces, and gear shifter grooves.

MAINSHAFT

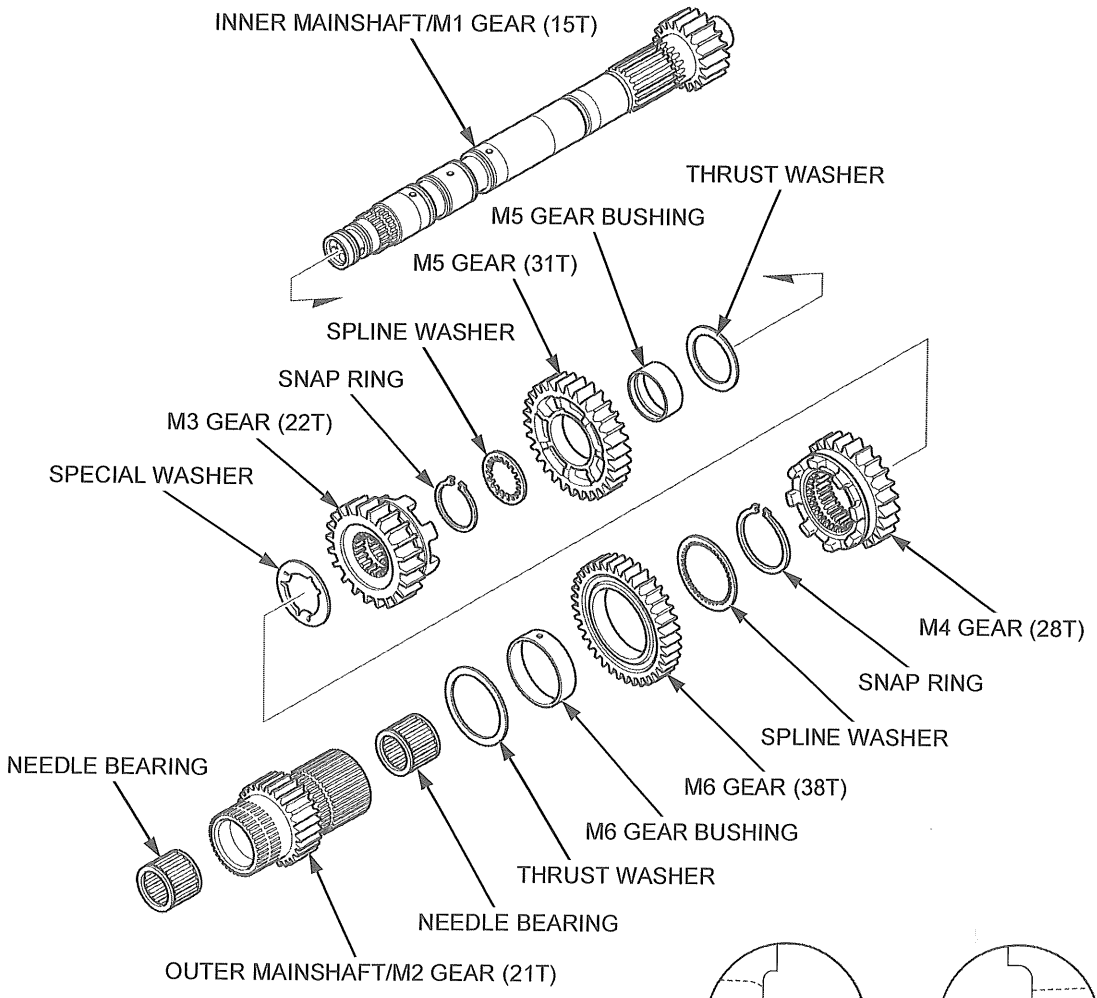

: Gear teeth, rotating surfaces, and bearing

: Bushing surfaces and gear shifter grooves

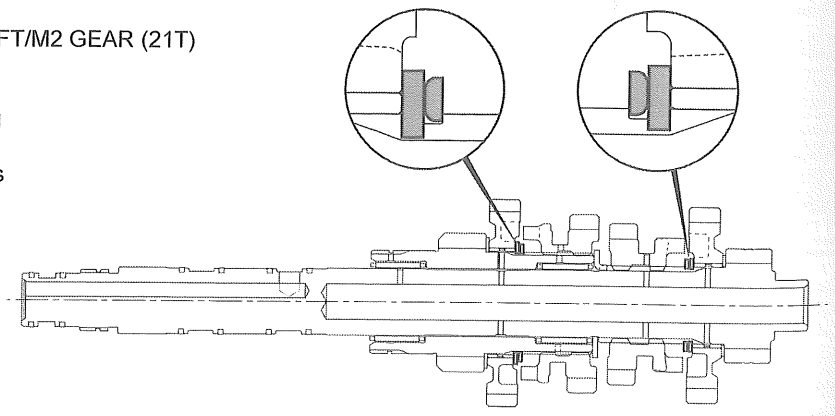

COUNTERSHAFT

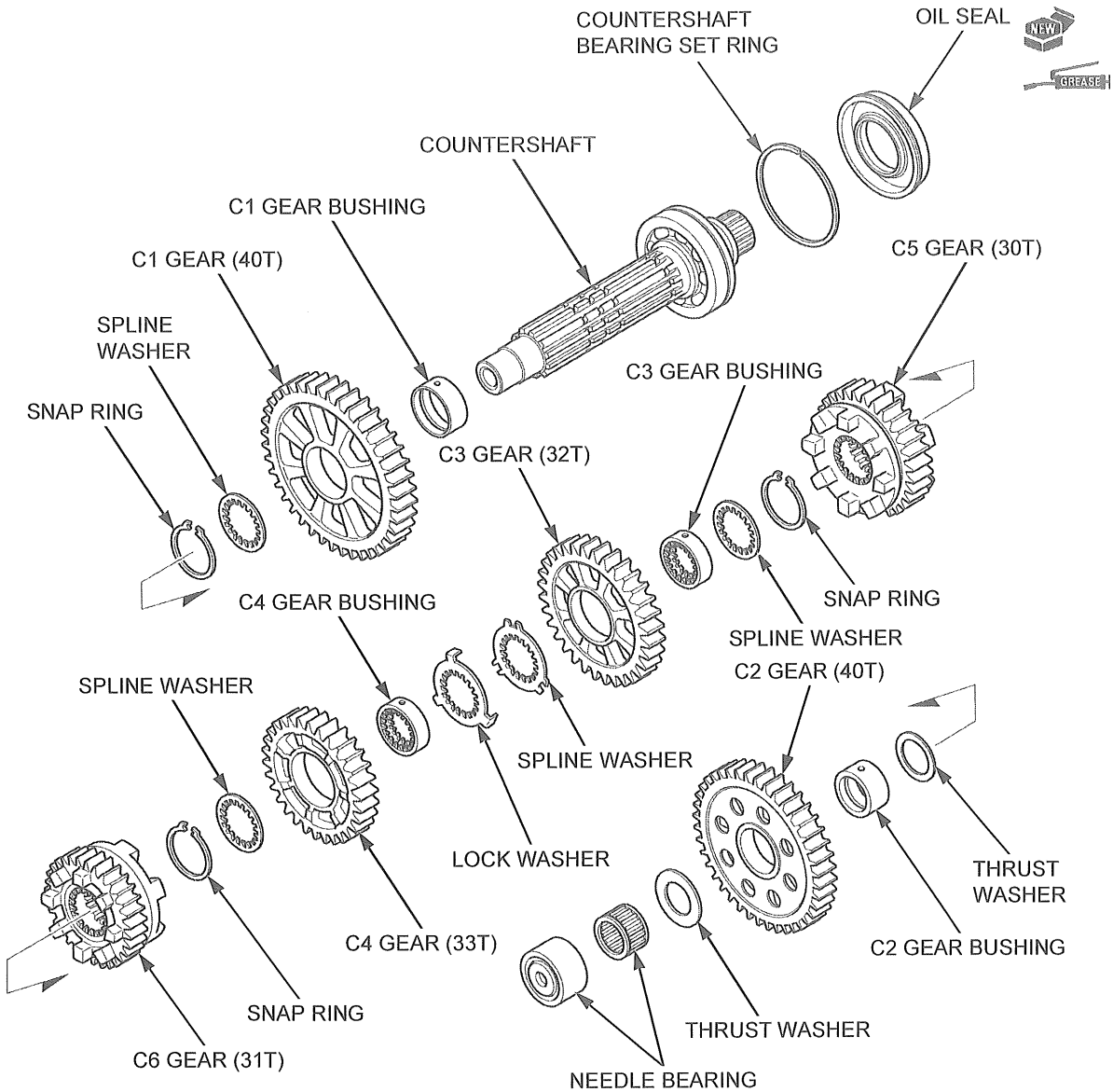

: Gear teeth, rotating surfaces and, bearing

: Bushing surfaces and gear shifter grooves

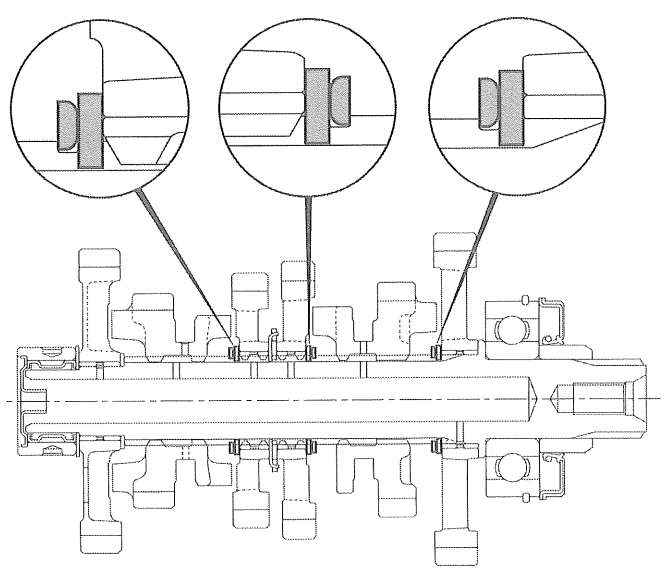

DISASSEMBLY/ASSEMBLY

NOTE:

- Do not expand the snap ring more than necessary for removal. To remove a snap ring, expand the snap ring and pull it off using the gear behind it.
- Keep track of the disassembled parts (gears, bushings, washers, and snap rings) by sliding them onto a tool or a piece of wire.
- Clean all parts in solvent and dry them thoroughly.
- Apply engine oil to the gear teeth, rotating surface, and bearing.
- Apply molybdenum oil solution to the spline bushing outer surfaces, bushing inner and outer surfaces, and gear shifter grooves.

MAINSHAFT

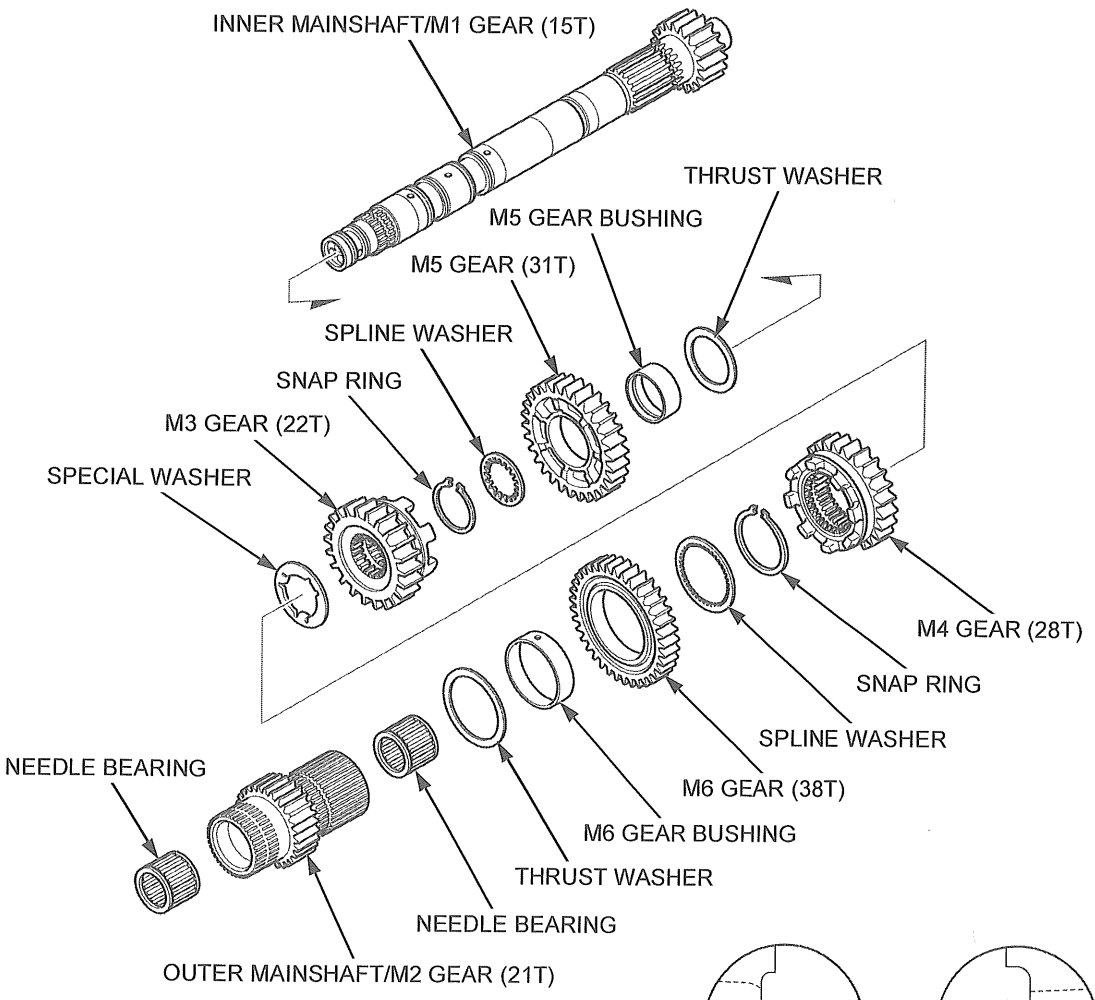

: Gear teeth, rotating surfaces, and bearing

: Bushing surfaces and gear shifter grooves

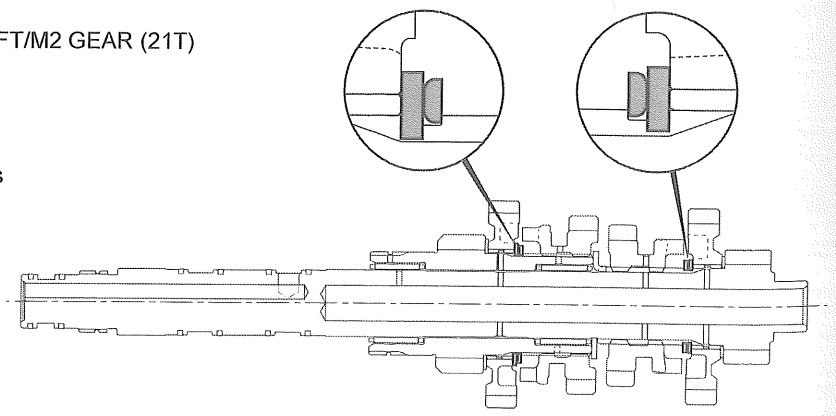

COUNTERSHAFT

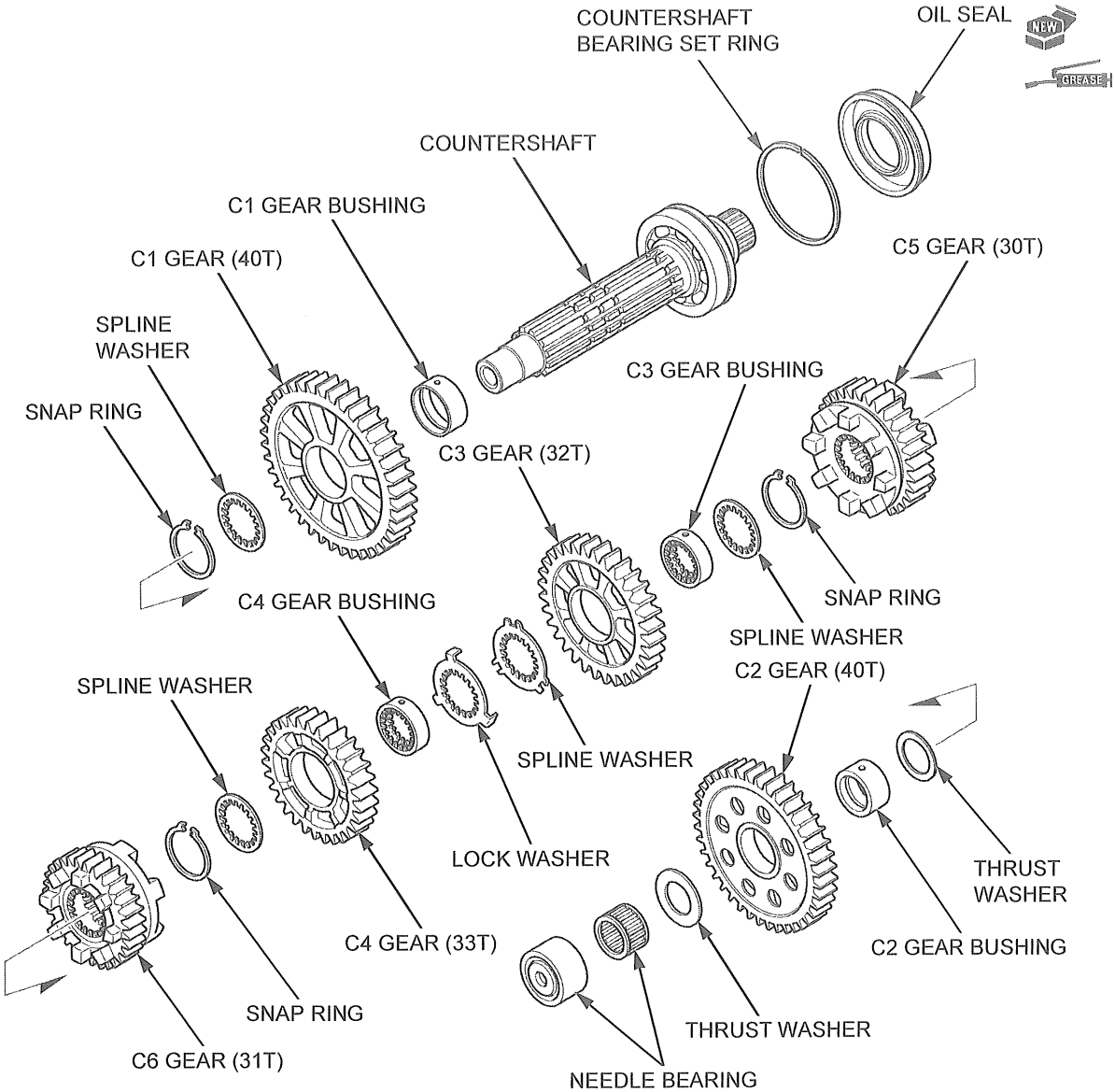

: Gear teeth, rotating surfaces and, bearing

: Bushing surfaces and gear shifter grooves

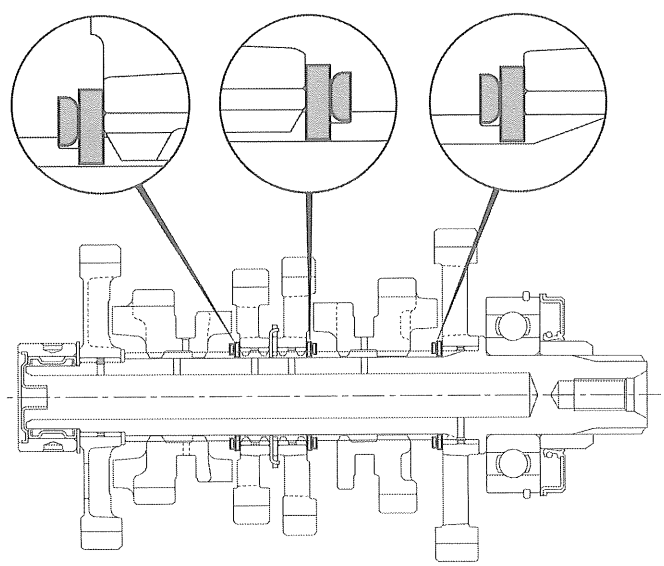

NOTE:

- Coat each gear with clean engine oil and check for smooth movement.
- Align the lock washer tabs with the spline washer grooves.
- Always install the thrust washers and snap rings with the chamfered (rolled) edge facing away from the thrust load.
- Install the snap rings [1] so that the end gap aligns with the groove of the splines.
- Make sure that the snap rings are fully seated in the shaft groove after installing them.
- Make sure that the special washer tabs align the inner mainshaft grooves.

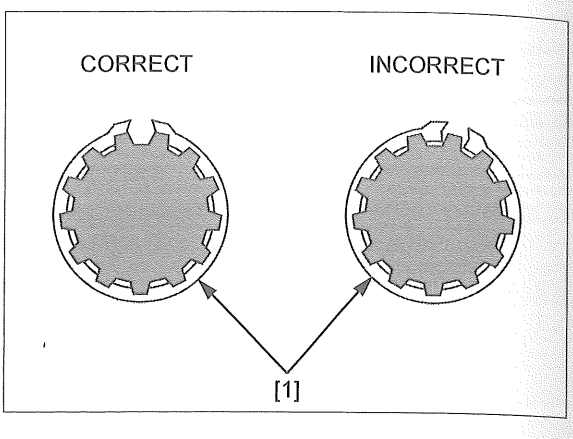

INSPECTION

Inspect the following parts for scratch, damage, abnormal wear, or deformation.

- Transmission gears
- Transmission bushings
- Transmission bearings
- Shift drum/bearing
- Shift forks
- Shift fork shaft

Measure each part according to CRANKCASE/TRANSMISSION SPECIFICATIONS (page 1-7).

Replace any part if it is out of service limit.

INSTALLATION

MAINSHAFT

Install the mainshaft assembly [1] into the upper crankcase.

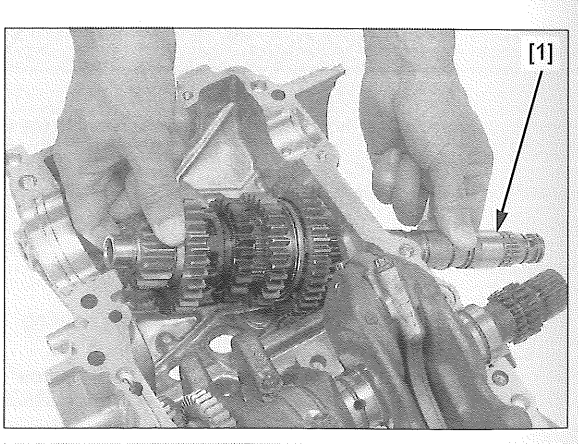

Apply engine oil to the right mainshaft bearing [1].

Install the right mainshaft bearing into the upper crankcase.

NOTE:

- Install the bearing into the crankcase with the marked side facing out.

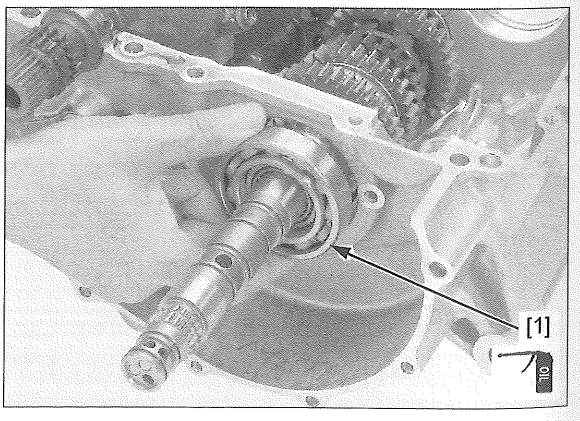

Apply locking agent to the threads of the mainshaft bearing set plate bolts [1] (page 1-15).

Install the mainshaft bearing set plate [2] with its "OUT SIDE" mark [3] facing out.

Install the set plate bolts and tighten them to the specified torque.

TORQUE: 12 N·m (1.2 kgf·m, 9 lbf·ft)

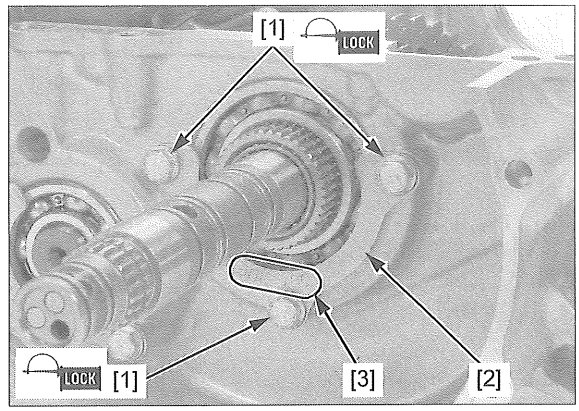

COUNTERSHAFT

Install the mainshaft (page 13-10).

Install the dowel pin [1] onto the upper crankcase hole.

Install the countershaft assembly [2].

NOTE:

- Align the needle bearing cap hole [3] with the dowel pin.
- Align the set ring [4] with the upper crankcase groove.
- Align the oil seal [5] flange with the upper crankcase groove.

Install the shift drum/shift fork (page 13-11).

Assemble the crankcase (page 13-15).

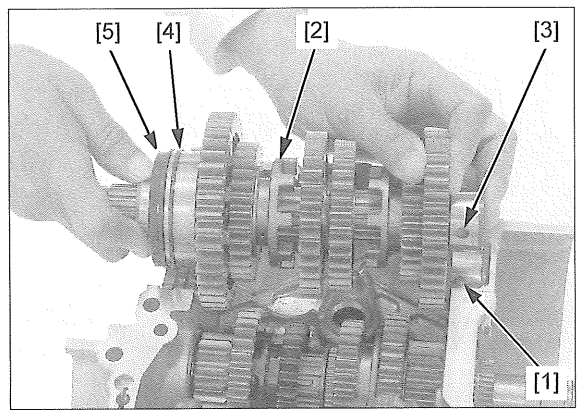

SHIFT DRUM/SHIFT FORK

Apply engine oil to the shift drum bearing [1].

Install the shift drum [2] and bearing into the lower crankcase.

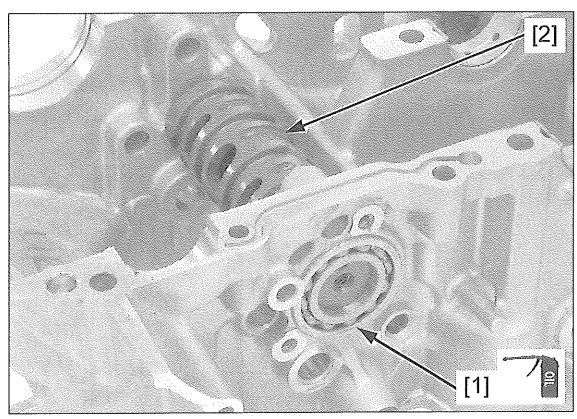

The shift forks have the following identification marks:

– "MKA ML" mark [1]: Left mainshaft shift fork
– "D2M R" mark [2]: Right mainshaft shift fork
– "D2C L" mark [3]: Left countershaft shift fork
– "D2C R" mark [4]: Right countershaft shift fork

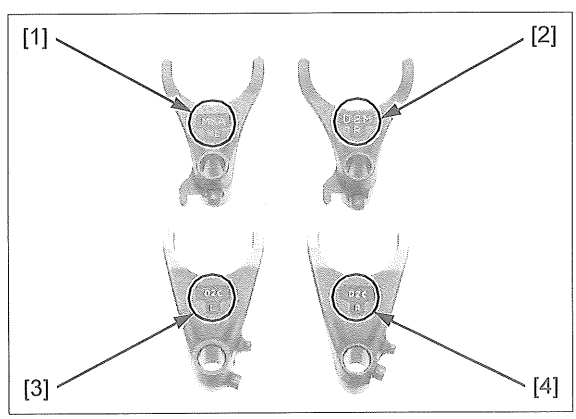

Apply molybdenum oil solution to the shift fork shaft outer surfaces, shift fork claws, and guide pins.

Install the left countershaft shift fork [1], right countershaft shift fork [2] and shift fork shaft [3].

Install the left mainshaft shift fork [4], right mainshaft shift fork [5] and shift fork shaft [6].

NOTE:

- Align the shift fork bosses with the shift drum outer guide grooves.
- Shift fork identification marks facing toward the right side.

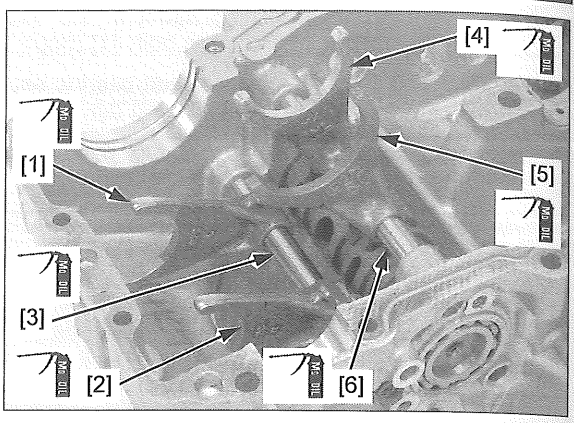

Apply locking agent to the bolt threads of the shift drum bearing set plate bolts [1] (page 1-15).

Install the shift drum bearing set plate [2] and bolts.

Tighten the bolts to the specified torque.

TORQUE: 12 N·m (1.2 kgf·m, 9 lbf·ft)

Assemble the crankcase (page 13-15).

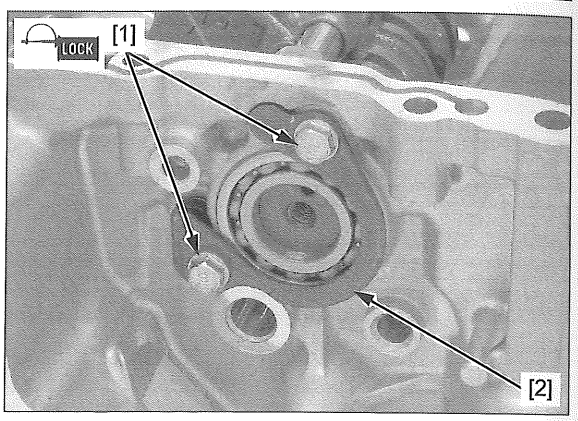

BALANCER

REMOVAL

FRONT BALANCER SHAFT

Separate the crankcase halves (page 13-4).

Remove the front balancer shaft bearing set plate bolts [1] and set plate [2] from the lower crankcase.

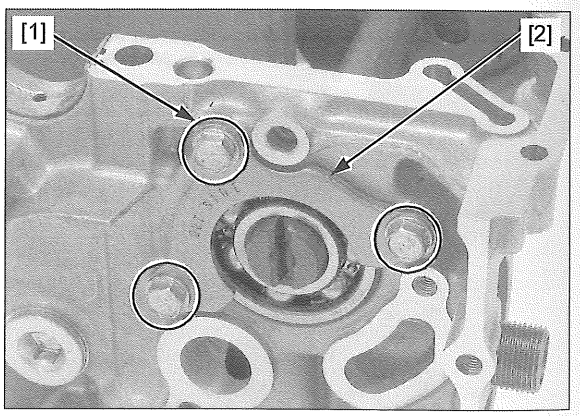

Remove the right front balancer shaft bearing [1] and front balancer shaft [2].

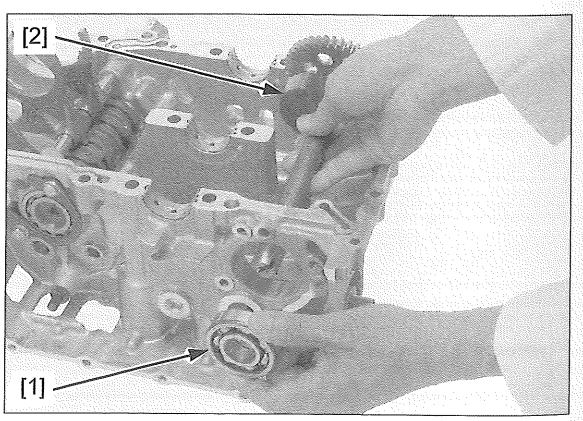

REAR BALANCER SHAFT

Remove the crankshaft (page 14-4).

Remove the mainshaft assembly (page 13-5).

Remove the rear balancer shaft bearing set plate bolts [1] and set plate [2] from the upper crankcase.

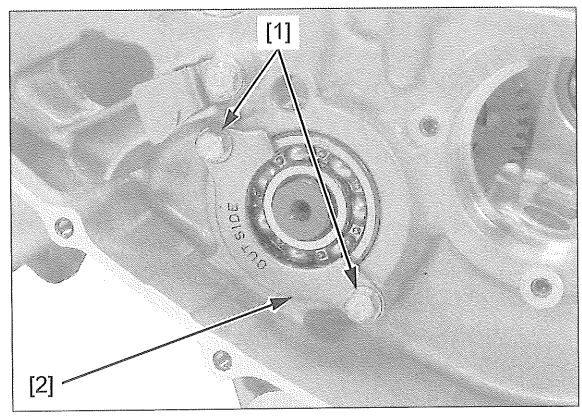

Remove the right rear balancer shaft bearing [1] and rear balancer shaft [2].

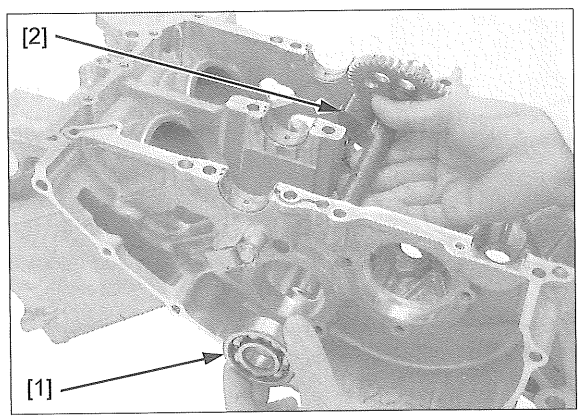

INSPECTION

Inspect the following parts for scratch, damage, abnormal wear, or deformation.

- Balancer shaft
- Balancer shaft bearings

Replace if necessary.

LEFT BALANCER SHAFT BEARING REPLACEMENT

Remove the front balancer shaft (page 13-12).

Drive out the left front balancer shaft bearing [1] from the lower crankcase.

Remove the rear balancer shaft (page 13-12).

Drive out the left rear balancer shaft bearing [2] from the upper crankcase.

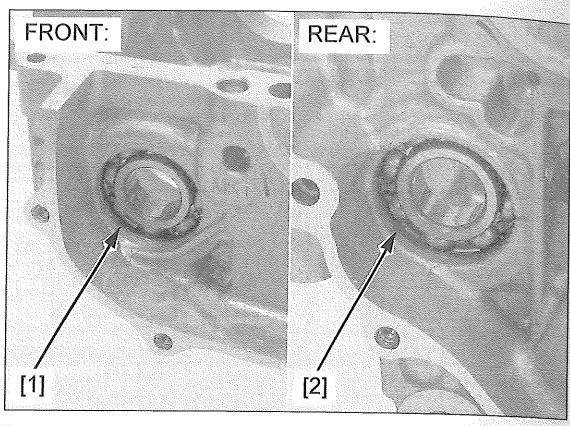

Apply engine oil to a new left balancer shaft bearing [1].

Drive the left balancer shaft bearing into the crankcase until it is fully seated using the special tools.

TOOLS:

Driver, 15 x 280L [2]	**07949-3710001**
Attachment, 42 x 47 mm [3]	**07746-0010300**
Pilot, 20 mm [4]	**07746-0040500**

NOTE:

- Drive in a new bearing squarely with the marking side facing toward the inside of the crankcase.

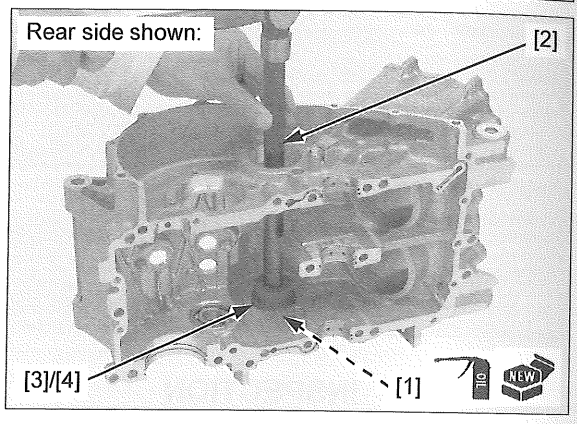

INSTALLATION

FRONT BALANCER SHAFT

Apply engine oil to the left front balancer shaft bearing.

Apply engine oil to the right front balancer shaft bearing [1].

Install the front balancer shaft [2] and right front balancer shaft bearing into the lower crankcase.

NOTE:

- Install the right front balancer shaft bearing into the crankcase with the marked side facing out.

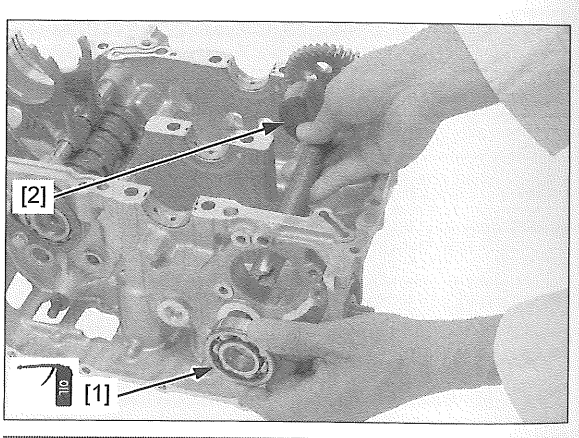

Apply locking agent to the threads of the front balancer shaft bearing set plate bolts [1] (page 1-15).

Install the front balancer shaft bearing set plate [2] with its "OUT SIDE" mark [3] facing out.

Install the set plate bolts and tighten them to the specified torque.

TORQUE: 12 N·m (1.2 kgf·m, 9 lbf·ft)

Assemble the crankcase (page 13-15).

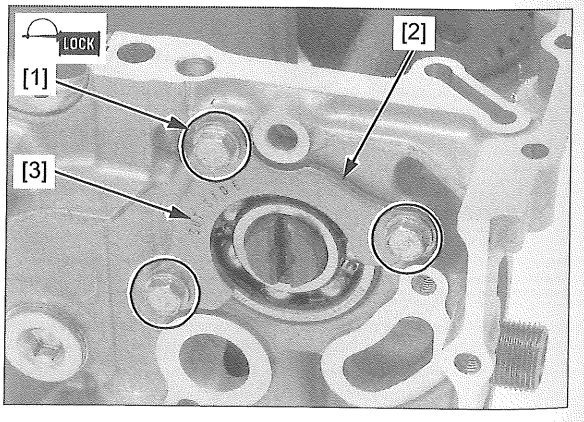

REAR BALANCER SHAFT

Apply engine oil to the left rear balancer shaft bearing.

Apply engine oil to the right rear balancer shaft bearing [1].

Install the rear balancer shaft [2] and bearing into the upper crankcase.

NOTE:

- Install the bearing into the crankcase with the marked side facing out.

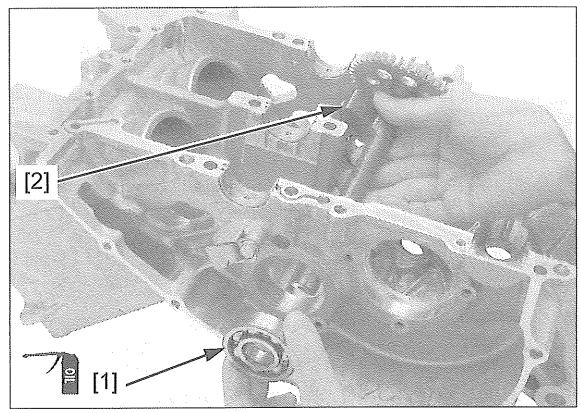

Apply locking agent to the threads of the rear balancer shaft bearing set plate bolts [1] (page 1-15).

Install the rear balancer shaft bearing set plate [2] with its "OUT SIDE" mark [3] facing out.

Install the set plate bolts and tighten them to the specified torque.

TORQUE: 12 N·m (1.2 kgf·m, 9 lbf·ft)

Assemble the crankcase (page 13-15).

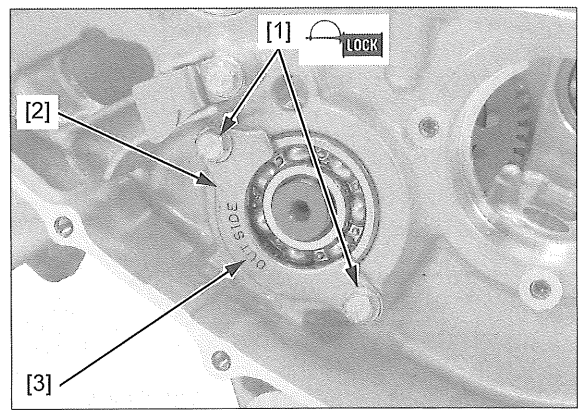

CRANKCASE ASSEMBLY

Apply liquid sealant (TB1207B manufactured by Three Bond or equivalent) to the crankcase mating surface as shown.

NOTE:

- Do not apply more liquid sealant than necessary.
- Do not apply liquid sealant to the crankcase main journal bolts area and the oil passage area as shown.

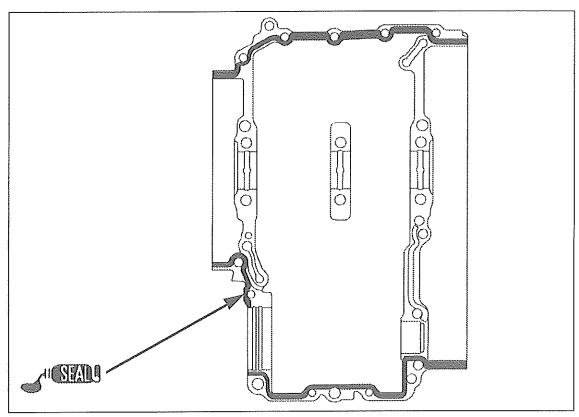

Install the dowel pins [1] and oil orifices [2] onto the upper crankcase.

NOTE:

- Install the oil orifices with its narrow hole side facing upper crankcase.

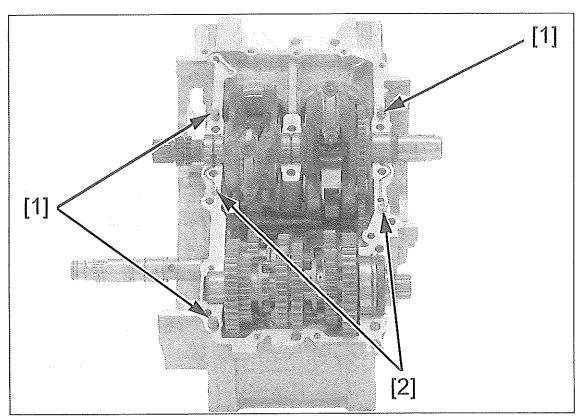

Set the crankshaft in the following:

- The index mark [1] on the balancer drive gear is positioned between the index lines [2] on the rear balancer driven gear.
- The "△" mark [3] is facing in an upward direction as shown.

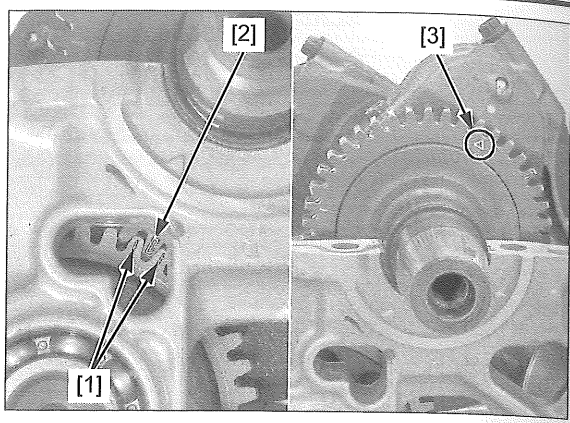

Apply molybdenum oil solution to the main journal bearing sliding surfaces on the lower crankcase.

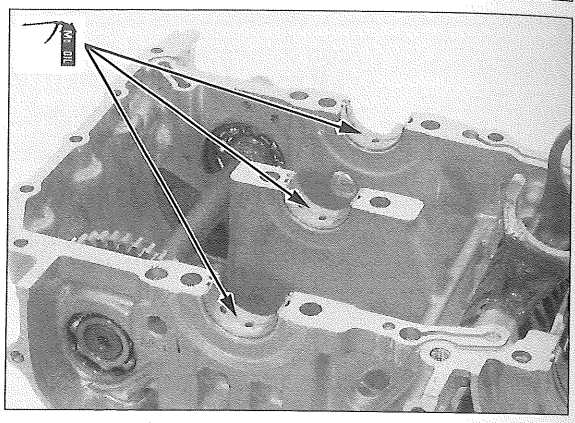

Install the lower crankcase onto the upper crankcase so that the index mark [1] on the balancer drive gear is positioned between the index lines [2] on the front balancer driven gear.

NOTE:

- Make sure the upper and lower crankcase are seated securely.

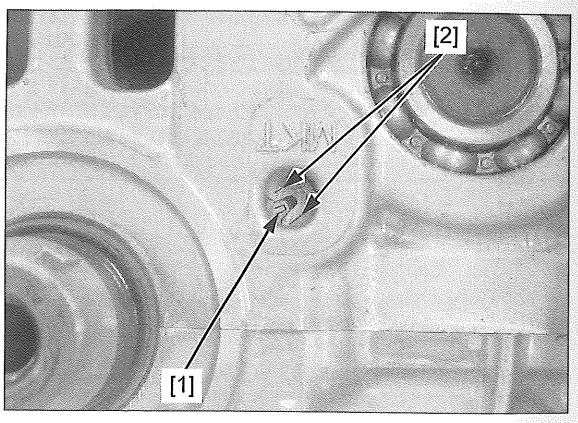

Install new crankcase main journal bolts [1].

NOTE:

- Do not reuse the crankcase main journal bolts, because the correct axial tension will not be obtained.
- The crankcase main journal bolts are pre-coated with an oil additive for axial tension stability. Do not remove the oil additive from the new crankcase main journal bolt surfaces.
- Tighten the crankcase main journal bolts using the Plastic Region Tightening Method.

Tighten the bolts in numerical order as shown in 2 or 3 steps to the specified torque.

Further tighten the crankcase main journal bolts 150°.

TORQUE: 20 N·m (2.0 kgf·m, 15 lbf·ft) + 150°

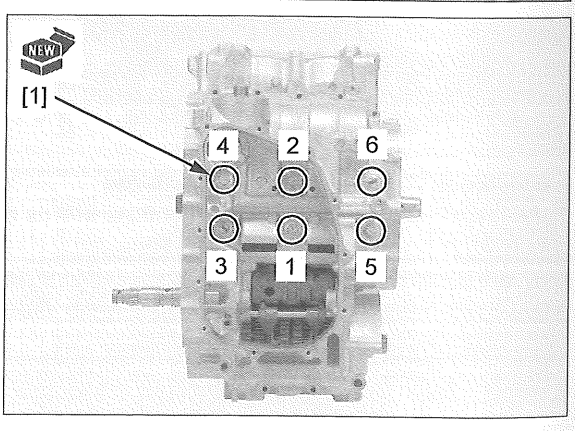

Install and tighten the crankcase 10 mm bolt [1] to the specified torque.

TORQUE: 39 N·m (4.0 kgf·m, 29 lbf·ft)

Install and tighten the crankcase 8 x 70 mm bolt [2] to the specified torque.

TORQUE: 24 N·m (2.4 kgf·m, 18 lbf·ft)

Apply locking agent to the threads of the crankcase 8 x 45 mm bolt [3] (page 1-13).

Install and tighten the crankcase 8 x 45 mm bolt [3] to the specified torque.

TORQUE: 24 N·m (2.4 kgf·m, 18 lbf·ft)

Install the crankcase 6 mm bolts [4] and tighten them to the specified torque in a crisscross pattern in 2 or 3 steps.

TORQUE: 14 N·m (1.4 kgf·m, 10 lbf·ft)

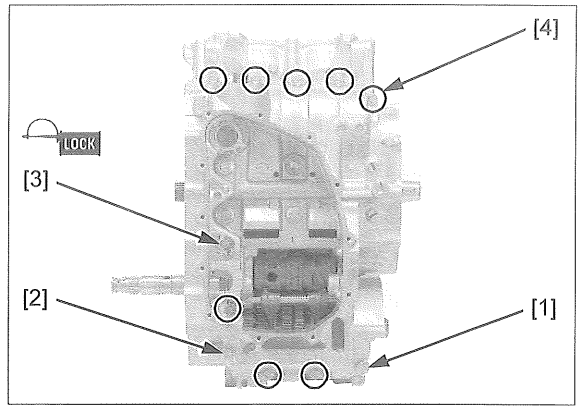

Place the engine with the lower side down.

Install a new sealing washer [1] and the crankcase 8 x 100 mm bolt [2].

NOTE:

- The sealing washer location is indicated on the upper crankcase by the "△" mark [3].

Install the crankcase 8 x 70 mm bolt [4].

Tighten the crankcase 8 x 100 mm bolts to the specified torque.

TORQUE: 24 N·m (2.4 kgf·m, 18 lbf·ft)

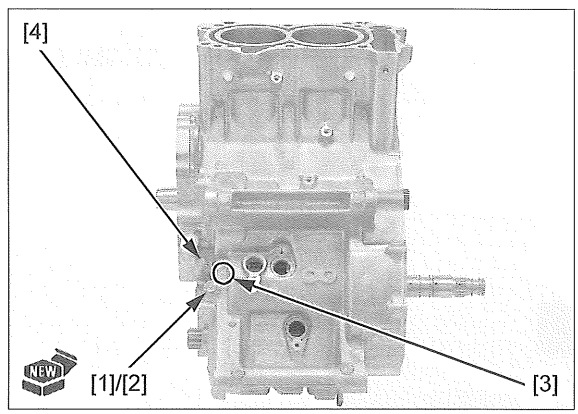

Install the cam chain [1].

Install the following:

- Oil strainer (page 9-6)
- EOT sensor (page 11-60)
- VS sensor (page 4-57)
- Mainshaft sensors (page 11-57)
- Oil pump (page 9-4)
- Gearshift linkage (page 11-56)
- Dual clutch (page 11-50)
- Primary drive gear (page 11-51)
- Neutral switch (page 11-61)
- Shift control motor/reduction gears (page 11-51)
- Flywheel (page 12-6)
- Cylinder head (page 10-19)
- Starter motor (page 6-5)
- EOP switch (page 21-14)
- Engine oil filter (page 3-10)
- Engine (page 15-9)

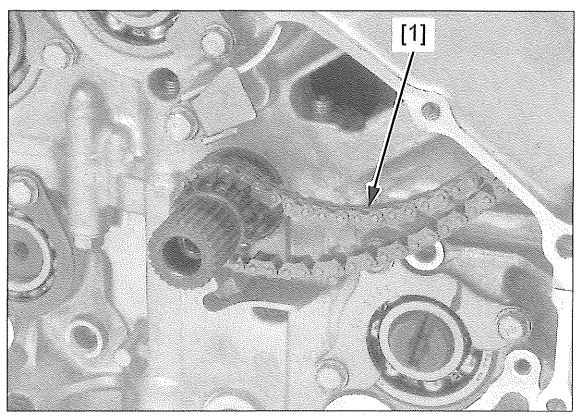

14. CRANKSHAFT/PISTON/CYLINDER

SERVICE INFORMATION 14-2

TROUBLESHOOTING 14-2

COMPONENT LOCATION 14-3

CRANKSHAFT 14-4

MAIN JOURNAL BEARING 14-6

CRANKPIN BEARING 14-9

PISTON/CYLINDER 14-12

SERVICE INFORMATION

GENERAL

NOTICE

This motorcycle's engine uses cracking connecting rods. Be sure to install each part in its original position, as noted during removal. Do not reuse connecting rods and bearing caps that have been improperly installed, because their mating surfaces will be damaged.

- The crankcase must be separated to service the crankshaft and piston/connecting rod (page 13-4).
- Mark and store the connecting rods, bearing caps, and bearing inserts to be sure of their correct locations for reassembly.
- The crankpin and main journal bearing inserts are select fit and are identified by color codes. Select replacement bearings from the code tables. After selecting new bearings, recheck the oil clearance with plastigauge. Incorrect oil clearance can cause major engine damage.

TROUBLESHOOTING

Cylinder compression is too low, hard to starting, or poor performance at low speed
- Leaking cylinder head gasket
- Worn, stuck or broken piston ring
- Worn or damaged cylinder and piston

Cylinder compression too high, overheating, or knocking
- Excessive carbon built-up on piston head or combustion chamber

Excessive smoke
- Worn cylinder, piston, or piston ring
- Improper installation of piston rings
- Scored or scratched piston or cylinder wall

Abnormal noise
- Worn piston pin or piston pin hole
- Worn connecting rod small end
- Worn cylinder, piston, or piston rings
- Worn main journal bearings
- Worn crankpin bearings

Engine vibration
- Excessive crankshaft runout

COMPONENT LOCATION

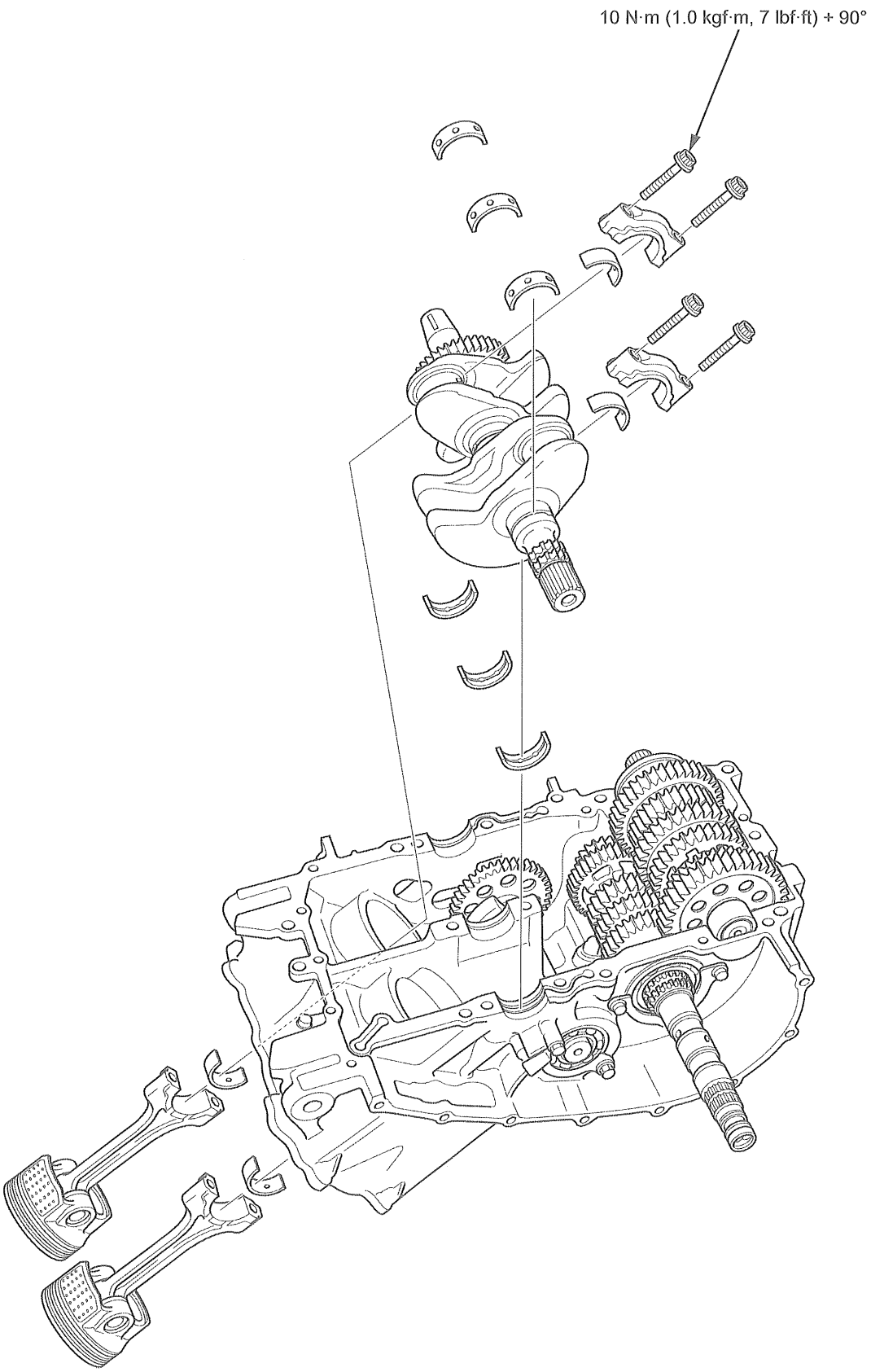

CRANKSHAFT

CONNECTING ROD SIDE CLEARANCE INSPECTION

Separate the crankcase halves (page 13-4).

Measure the connecting rod side clearance.

SERVICE LIMIT: 0.45 mm (0.018 in)

If the clearance exceeds the service limit, replace the connecting rod.

Recheck and if still out of limit, replace the crankshaft.

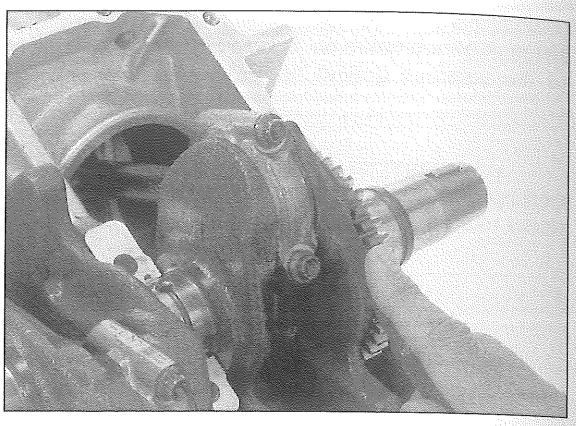

REMOVAL

Separate the crankcase halves (page 13-4).

Mark the bearing caps and bearings as you remove them to indicate the correct cylinder for reassembly.

Remove the crankpin bearing cap bolts [1] and bearing caps [2].

Remove the crankshaft [3].

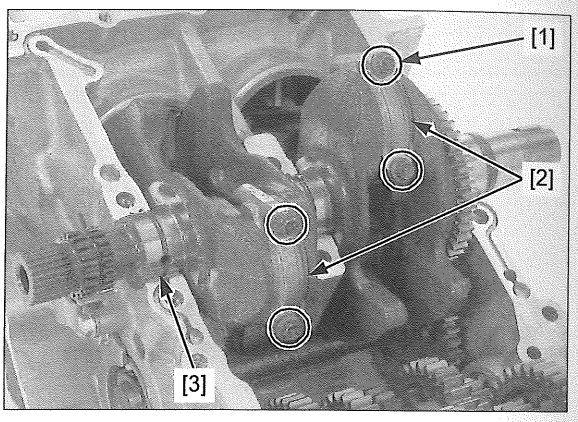

INSPECTION

Remove the crankshaft (page 14-4).

Support the crankshaft on both end journals [1].

Set a dial gauges on the crankshaft at two points [2].

Rotate the crankshaft two revolutions and read the runout.

SERVICE LIMITS: 0.03 mm (0.001 in)

Check the balancer drive gear [3] teeth for abnormal wear or damage.

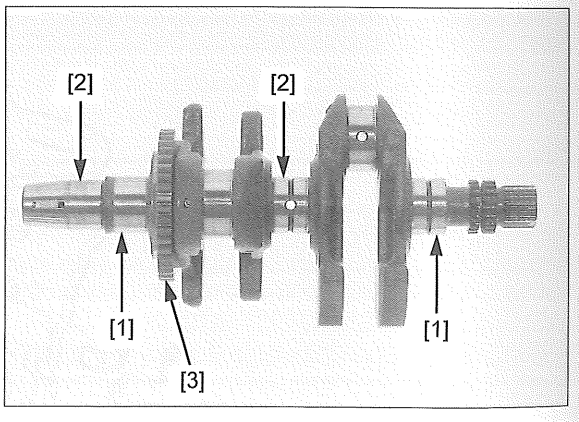

INSTALLATION

Clean the mating surface of the connecting rods with cleaning solvent and blow them with compressed air.

Apply molybdenum oil solution to the main journal bearing [1] sliding surfaces on the upper crankcase.

Apply molybdenum oil solution to the crankpin bearing [2] sliding surfaces on the connecting rods.

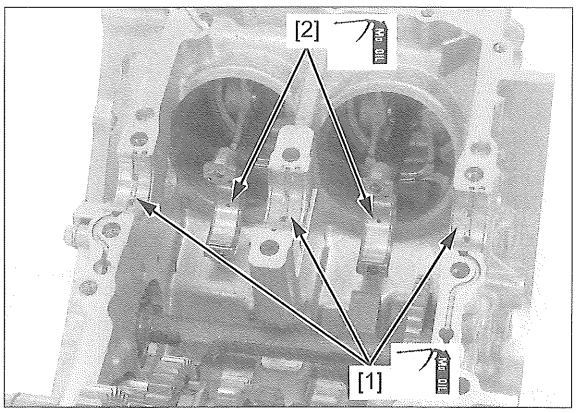

Apply molybdenum oil solution to the thrust surfaces of the crankshaft as shown.

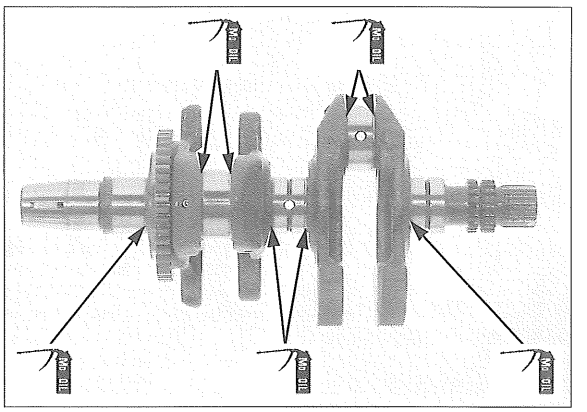

Install the crankshaft [1] onto the upper crankcase so that the index mark [2] on the balancer drive gear is positioned between the index lines [3] on the rear balancer driven gear.

NOTE:

- Be careful not to damage the crankpin, main journal and bearing inserts.

Set the connecting rods onto the crankpins.

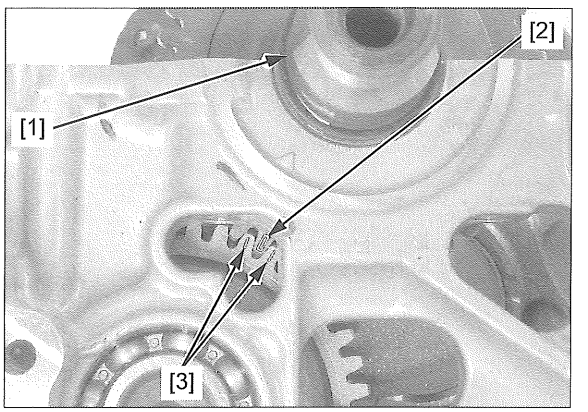

Clean the mating surface of the crankpin bearing caps [1] with cleaning solvent and blow them with compressed air.

Apply molybdenum oil solution to the crankpin bearing sliding surfaces on the crankpin bearing caps.

NOTICE

Be sure to install each part in its original position, as noted during removal. Do not reuse connecting rods and bearing caps that have been improperly installed, because their mating surfaces will be damaged.

Install the crankpin bearing caps.

NOTE:

- Align the I.D. code number [2] on the connecting rods.

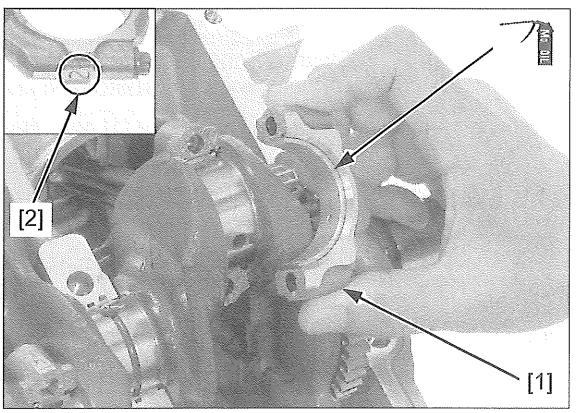

Apply engine oil to the threads and seating surfaces of new crankpin bearing cap bolts [1].

NOTE:

- The crankpin bearing cap bolts cannot be reused. Once the bolts have been loosened replace them with new ones.

Install the bolts and tighten them to the specified torque in 2 or 3 steps alternately.

Further tighten the bolts 90°.

TORQUE: 10 N·m (1.0 kgf·m, 7 lbf·ft) + 90°

Assemble the crankcase halves (page 13-15).

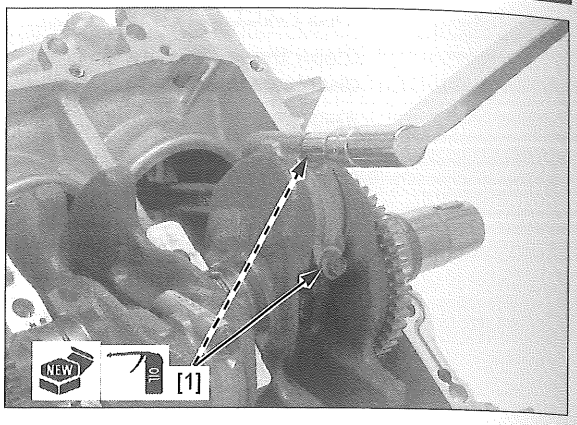

MAIN JOURNAL BEARING

NOTICE

Do not interchange the bearing inserts. They must be installed in their original locations or the correct bearing oil clearance may not be obtained, resulting in engine damage.

Remove the crankshaft (page 14-4).

BEARING INSPECTION

Check the main journal bearings [1] on the upper and lower crankcase for unusual wear or peeling.

Check the bearing tabs for damage.

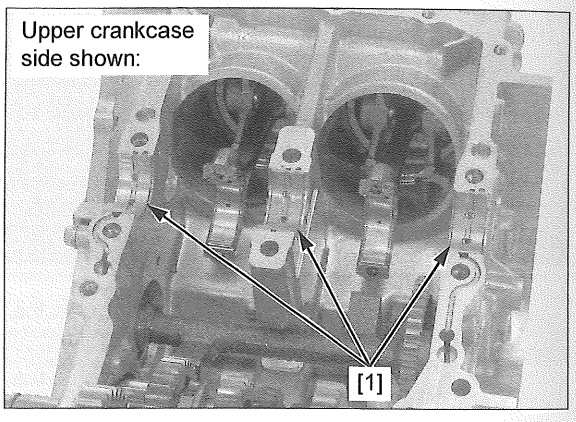

OIL CLEARANCE INSPECTION

Remove the front balancer shaft (page 13-12).

Remove the rear balancer shaft (page 13-12).

Install the dowel pins onto the upper crankcase (page 13-15).

Clean off any oil from the main journal bearing sliding surfaces and crankshaft main journals.

Install the crankshaft [1] onto the upper crankcase.

Put a strip of plastigauge [2] lengthwise on each main journal avoiding the oil hole.

NOTE:

- Do not rotate the crankshaft during inspection.

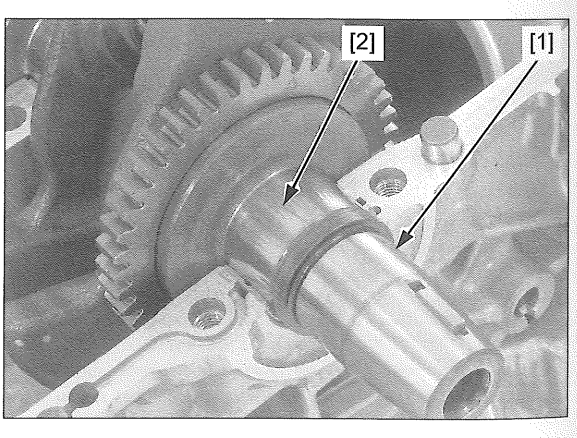

Install the lower crankcase [1] onto the upper crankcase.

Make sure the upper and lower crankcase are seated securely.

Apply engine oil to the threads and seating surfaces of the crankcase main journal bolt (retightening) [2].

Install the bolts and tighten them in numerical order as shown in a crisscross pattern in 2 or 3 steps to the specified torque.

Further tighten them 120°.

TORQUE: 20 N·m (2.0 kgf·m, 15 lbf·ft) + 120°

Remove the crankcase main journal bolt and lower crankcase.

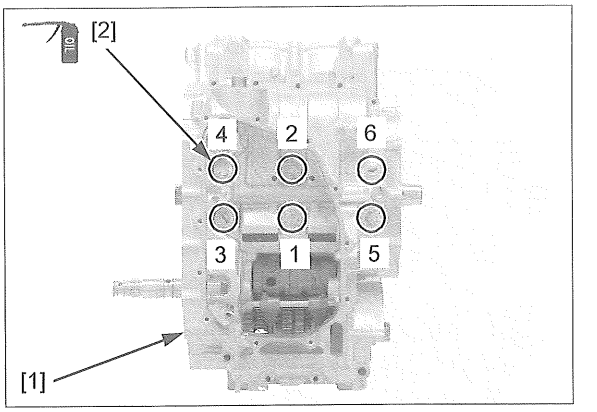

Measure the compressed plastigauge at its widest point on each main journal to determine the oil clearance.

SERVICE LIMIT: 0.05 mm (0.002 in)

If the oil clearance exceeds the service limit, select a replacement bearing.

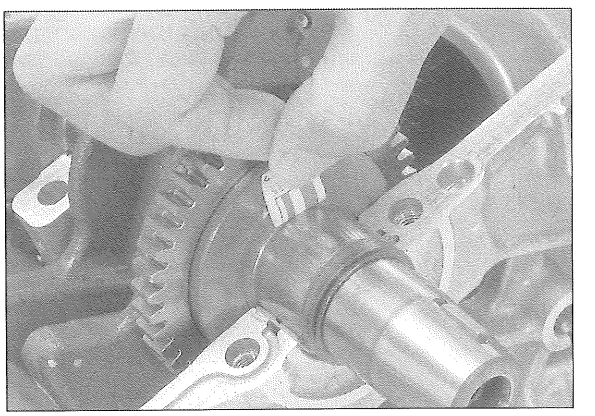

BEARING SELECTION

Record the crankcase bearing support I.D. code letters [1] from left side of the upper crankcase as shown.

NOTE:

- Letters (A, B or C) are bearing support I.D. codes from left to right.

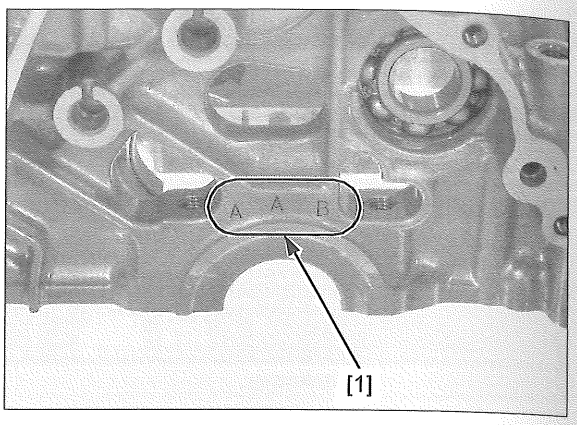

If the crankshaft is replaced, record the corresponding main journal O.D. code numbers [1] from the crank weight.

NOTE:

- Numbers (1, 2 or 3) on the crank weight are main journal O.D. codes from left to right.

If you are reusing the crankshaft, measure the main journal O.D. with a micrometer.

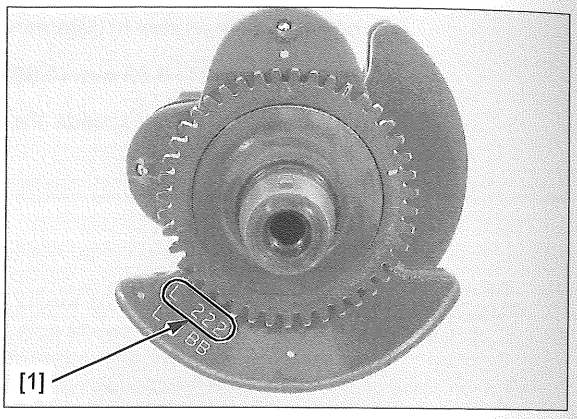

Cross-reference the main journal and bearing support codes to determine the replacement bearing color code [1].

MAIN JOURNAL BEARING THICKNESS:

A: Blue: Thickest
B: Black:
C: Brown: ↕
D: Green:
E: Yellow: Thinnest

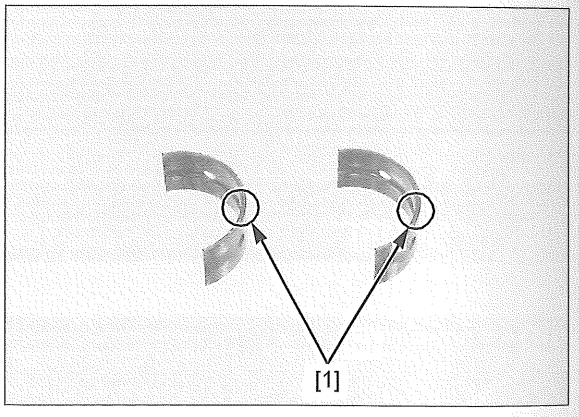

MAIN JOURNAL BEARING SELECTION TABLE:

			BEARING SUPPORT I.D. CODE		
			A	B	C
			37.000 – 37.006 mm (1.4567 – 1.4569 in)	37.006 – 37.012 mm (1.4569 – 1.4572 in)	37.012 – 37.018 mm (1.4572 – 1.4574 in)
MAIN JOURNAL O.D. CODE	1	34.010 – 34.016 mm (1.3390 – 1.3392 in)	E (Yellow)	D (Green)	C (Brown)
	2	34.004 – 34.010 mm (1.3387 – 1.3390 in)	D (Green)	C (Brown)	B (Black)
	3	33.998 – 34.004 mm (1.3385 – 1.3387 in)	C (Brown)	B (Black)	A (Blue)

NOTICE

After selecting new bearings, recheck the clearance with a plastigauge. Incorrect clearance can cause severe engine damage.

BEARING REPLACEMENT

Remove the main journal bearings from the upper/lower crankcase

Clean the bearing outer surfaces and upper/lower crankcase bearing supports.

Install the main journal bearings [1] onto the crankcase bearing supports.

NOTE:

- Align each main journal bearing tab with each crankcase groove.

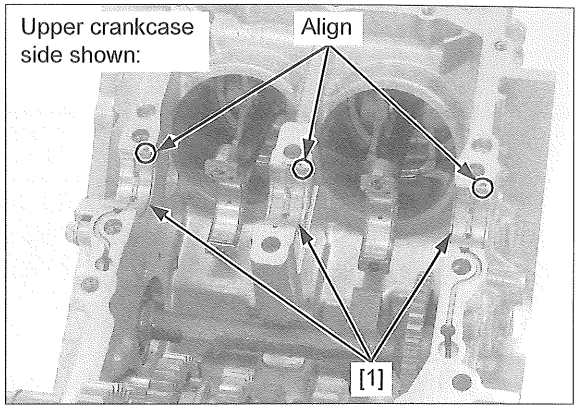

CRANKPIN BEARING

NOTICE

Do not interchange the bearing inserts. They must be installed in their original locations or the correct bearing oil clearance may not be obtained, resulting in engine damage.

Remove the crankshaft (page 14-4).

BEARING INSPECTION

Check the crankpin bearings [1] on the connecting rod and bearing cap for unusual wear or peeling.

Check the bearing tabs for damage.

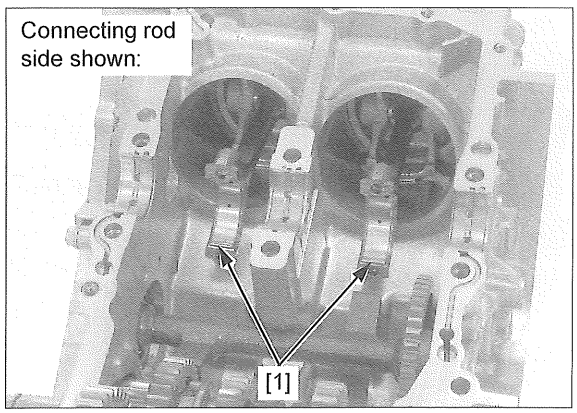

OIL CLEARANCE INSPECTION

Clean the mating surface of the connecting rod and crankpin bearing cap with cleaning solvent and blow them with compressed air.

Clean off any oil from the crankpin bearing sliding surfaces and crankpins.

Carefully install the crankshaft onto the upper crankcase.

Set the connecting rods onto the crankpins.

Put a strip of plastigauge [1] lengthwise on each crankpin avoiding the oil hole.

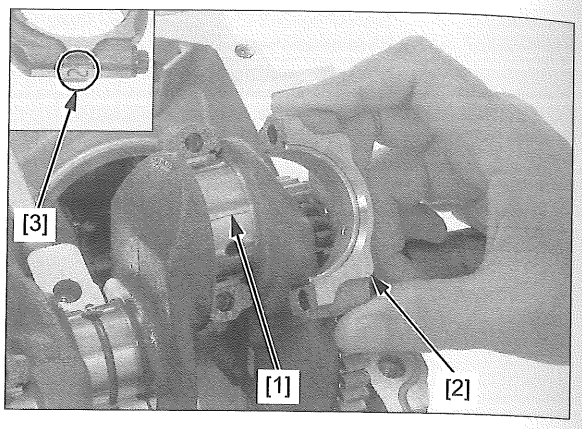

NOTE:

- Do not rotate the crankshaft during inspection.

Install the crankpin bearing caps [2].

NOTICE

Be sure to install each part in its original position, as noted during removal. Do not reuse connecting rods and bearing caps that have been improperly installed, because their mating surfaces will be damaged.

NOTE:

- Align the I.D. code number [3] on the connecting rods.

Apply engine oil to the threads and seating surfaces of the crankpin bearing cap bolt (retightening) [1].

Install the bolts and tighten them to the specified torque in 2 or 3 steps alternately.

Further tighten the bolts 90°.

TORQUE: 10 N·m (1.0 kgf·m, 7 lbf·ft) + 90°

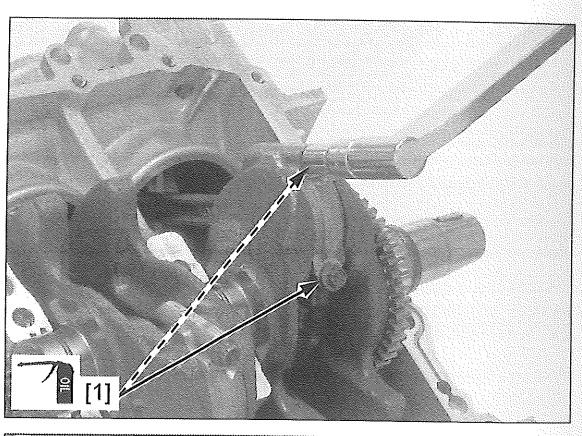

NOTE:

- Use the removed crankpin bearing cap bolts when checking the oil clearance.

Remove the bearing caps and measure the compressed plastigauge [1] at its widest point on the crankpin to determine the oil clearance.

SERVICE LIMIT: 0.064 mm (0.0025 in)

If the oil clearance exceeds the service limit, select the correct replacement bearings.

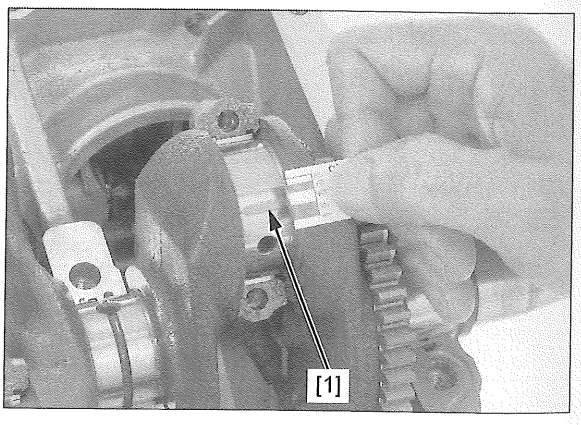

BEARING SELECTION

Record the connecting rod I.D. code number [1] or measure the I.D. with the crankpin bearing cap installed without bearing inserts.

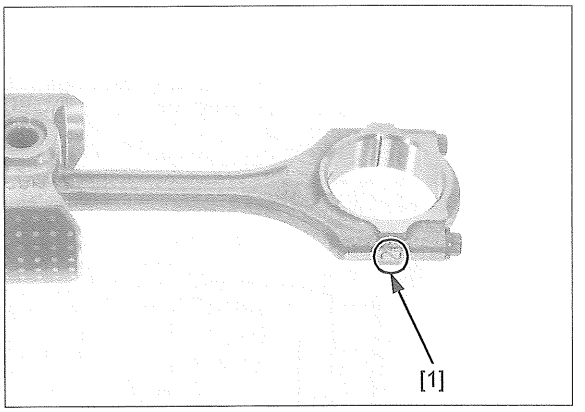

NOTE:

- Numbers (1, 2, 3 or 4) on the connecting rods are the connecting rod I.D. codes.

If the crankshaft is replaced, record the corresponding crankpin O.D. code letter [1].

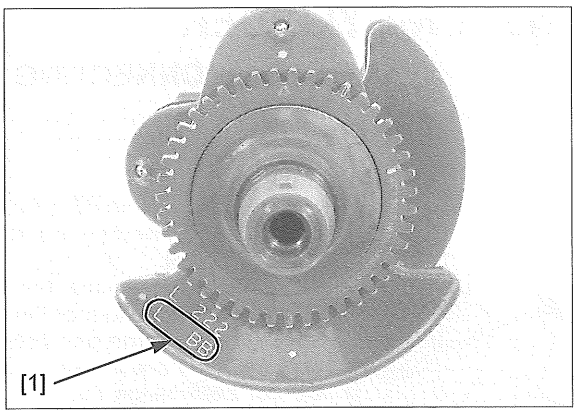

NOTE:

- Letters (A, B, C or D) on the crank weight are the crankpin O.D. codes from left to right.

If the crankshaft is reused, measure the crankpin O.D. with a micrometer.

Cross-reference the connecting rod and crankpin codes to determine the replacement bearing color code [1].

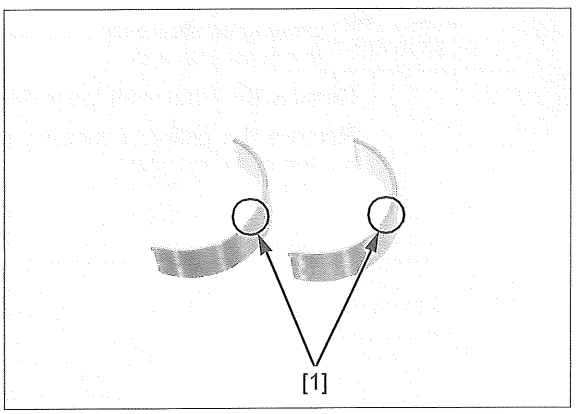

CRANKPIN BEARING THICKNESS:

B: Black: Thickest
C: Brown:
D: Green:
E: Yellow: ↕
F: Pink:
G: Red:
H: White: Thinnest

CRANKPIN BEARING SELECTION TABLE:

			CONNECTING ROD I.D. CODE			
			1	2	3	4
			43.000 – 43.006 mm (1.6929 – 1.6931 in)	43.006 – 43.012 mm (1.6931 – 1.6934 in)	43.012 – 43.018 mm (1.6934 – 1.6936 in)	43.018 – 43.024 mm (1.6936 – 1.6939 in)
CRANKPIN O.D. CODE	A	39.994 – 40.000 mm (1.5746 – 1.5748 in)	H (White)	G (Red)	F (Pink)	E (Yellow)
	B	39.988 – 39.994 mm (1.5743 – 1.5746 in)	G (Red)	F (Pink)	E (Yellow)	D (Green)
	C	39.982 – 39.988 mm (1.5741 – 1.5743 in)	F (Pink)	E (Yellow)	D (Green)	C (Brown)
	D	39.976 – 39.982 mm (1.5739 – 1.5741 in)	E (Yellow)	D (Green)	C (Brown)	B (Black)

NOTICE

After selecting new bearings, recheck the clearance with a plastigauge. Incorrect clearance can cause severe engine damage.

BEARING INSTALLATION

Clean the bearing outer surfaces, crankpin bearing cap and connecting rod.

Install the crankpin bearings [1] onto the bearing cap and connecting rod.

NOTE:

- Align each tab with each groove.

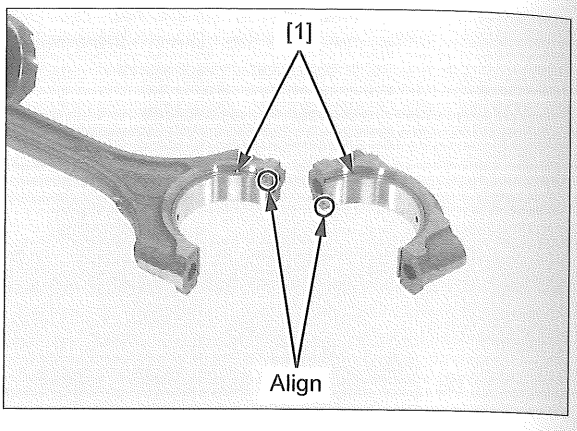

PISTON/CYLINDER

PISTON/CONNECTING ROD REMOVAL

NOTICE

- *Before piston removal, place a clean shop towel around the connecting rod to prevent damaging the cylinder sleeve.*
- *Do not try to remove the piston/connecting rod assembly from bottom of the cylinder; the assembly will get stuck in the gap between the cylinder liner and the upper crankcase.*
- *Do not interchange the bearing inserts. They must be installed in their original locations or the correct bearing oil clearance may not be obtained, resulting in engine damage.*

Remove the crankshaft (page 14-4)

Remove the piston/connecting rod assembly [1] from the top of the cylinder.

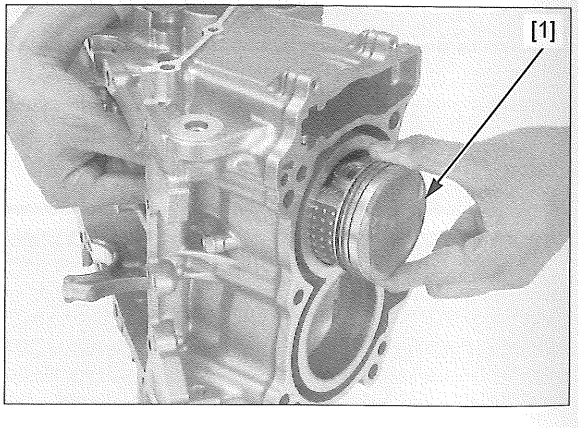

PISTON RING REMOVAL

Spread each piston ring ends and remove them by lifting up at a point opposite the gap.

NOTE:

- Be careful not to damage the piston ring by spreading the ends too far.

Clean carbon deposits from the piston ring grooves with a ring that will be discarded.

NOTE:

- Never use a wire brush; it will scratch the groove.

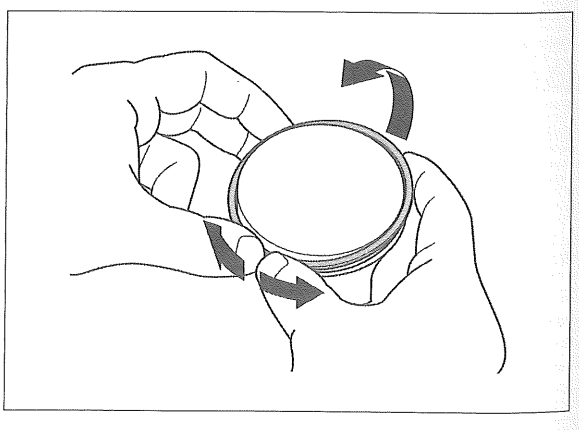

PISTON REMOVAL

Assemble the special tools as shown.

TOOLS:

Piston pin tool set	**07PAF-0010000**
– Piston base head [1]	**07PAF-0010400**
– Piston pin pilot [2]	**07PAF-0010300**
– Piston base spring [3]	**07973-6570600**
– Piston base [4]	**07973-6570500**

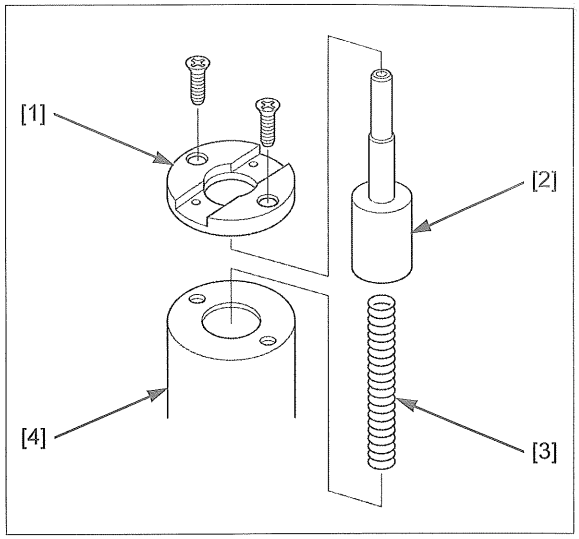

Temporarily install the pilot collar [1] to the piston pin pilot.

Adjust the piston base head inserts [2] as shown.

Tighten the screws [3].

TOOLS:

Piston pin tool set	**07PAF-0010000**
– Pilot collar, 18 mm	**07PAF-0010640**
– Piston base head insert	**07PAF-0010500**

Remove the pilot collar.

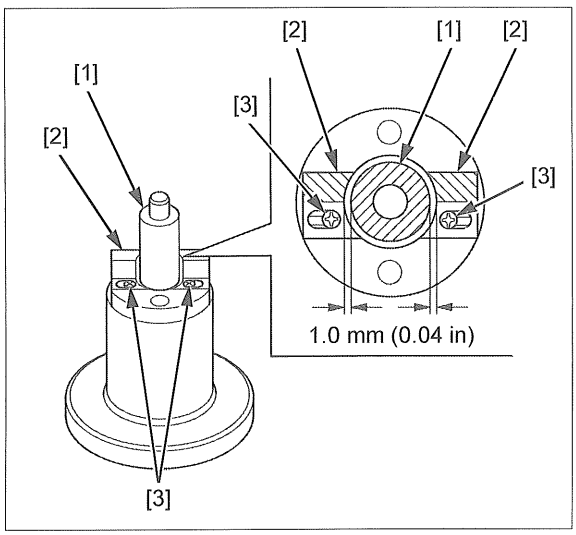

Assemble the insert pin [1] and insert adjuster [2].

TOOLS:

Piston pin tool set	**07PAF-0010000**
– Insert pin	**07PAF-0010700**
– Insert adjuster	**07PAF-0010800**

Adjust the insert pin and insert adjuster to the specified length.

SPECIFIED LENGTH: 44.0 mm (1.73 in)

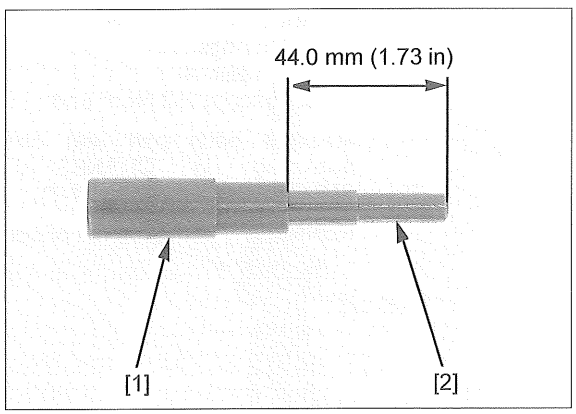

Place the piston assembly [1] on the piston base assembly [2] with the chamfered side of the piston pin hole facing down as shown.

NOTE:

- Be sure to position the piston flat area against the piston base head inserts.

Place the pilot collar [3] and insert pin/insert adjuster [4] on the piston assembly.

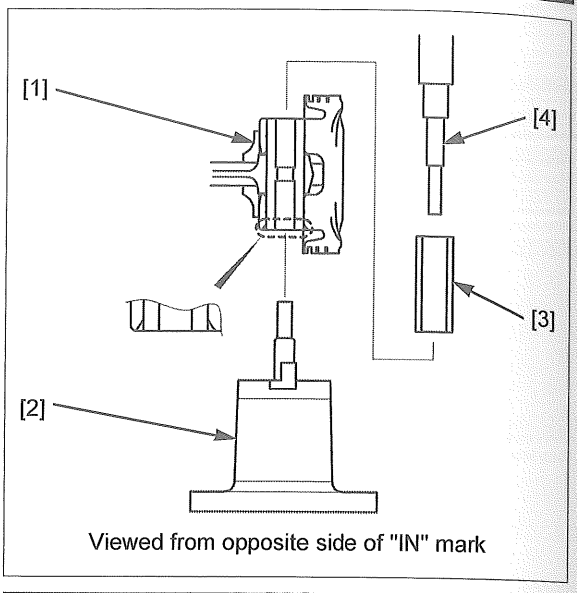

Viewed from opposite side of "IN" mark

Press the piston pin [1] out with the following special tools using a hydraulic press.

- Insert pin [2]
- Insert adjuster [3]
- Pilot collar [4]

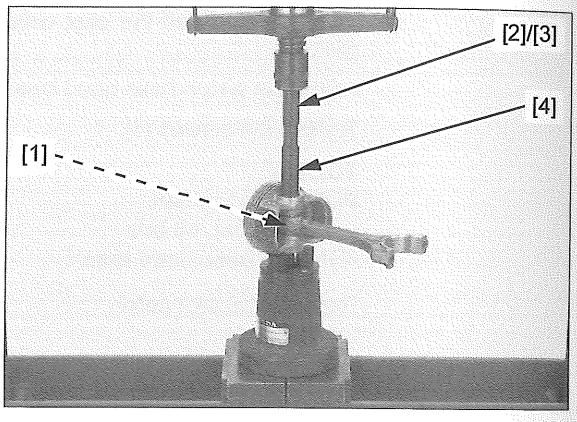

INSPECTION

Inspect the following parts for scratches, damage, abnormal wear, or deformation.

- Cylinder
- Piston
- Piston rings
- Piston pin
- Connecting rod small end

Measure each part and calculate the clearance according to CRANKSHAFT/PISTON/CYLINDER SPECIFICATIONS (page 1-7).

Replace any part if it is out of service limit.

PISTON INSTALLATION

Set the piston onto the connecting rod with the "IN" mark [1] facing the same side as the oil hole [2].

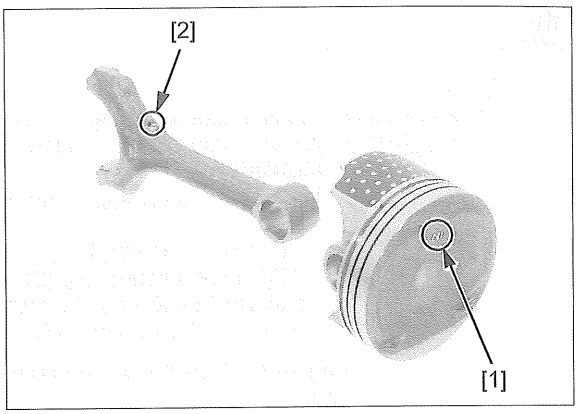

Assemble and adjust the piston pin tool set (page 14-13).

TOOLS:

Piston pin tool set	**07PAF-0010000**
– Piston base head	**07PAF-0010400**
– Piston pin pilot	**07PAF-0010300**
– Piston base spring	**07973-6570600**
– Piston base	**07973-6570500**
– Pilot collar, 18 mm	**07PAF-0010640**
– Piston base head insert	**07PAF-0010500**
– Insert pin	**07PAF-0010700**
– Insert adjuster	**07PAF-0010800**

Insert the pilot collar [1] into the piston [2] and connecting rod [3], and place them on the piston base assembly [4] with the chamfered side of the piston pin hole facing down as shown.

NOTE:

- Be sure to position the piston flat area against the piston base head inserts.

Apply engine oil to the piston pin [5] outer surface.

Place the piston pin and insert pin/insert adjuster [6] on the pilot collar.

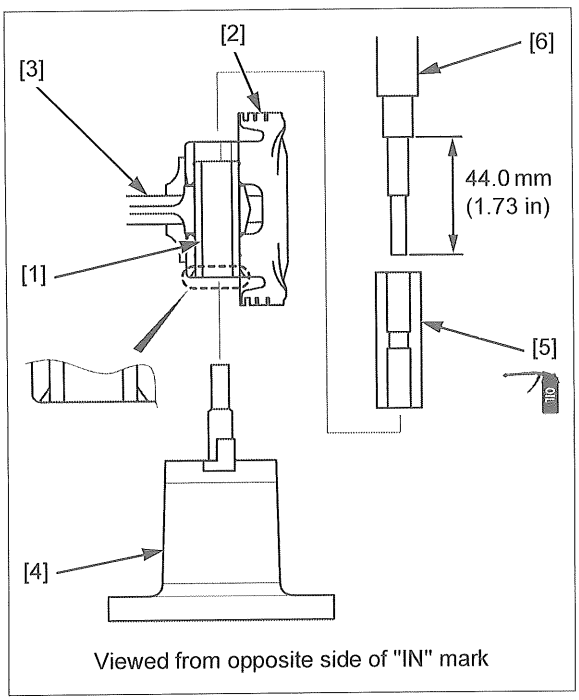

Viewed from opposite side of "IN" mark

Place the piston [1], connecting rod [2], piston pin [3] and special tools on the hydraulic press.

Press the piston pin until the special tools are fully seated.

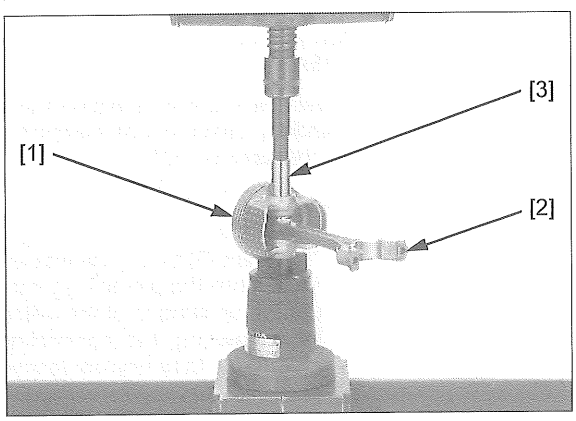

PISTON RING INSTALLATION

Clean the piston ring grooves thoroughly and install the piston rings.

NOTE:

- Apply engine oil to the piston ring sliding surface.
- Avoid piston and piston ring damage during installation.
- Install the piston rings with the marked side facing up.
  – "1T" mark: top ring [1]
  – "2T" mark: second ring [2]
- To install the oil ring [3], install the spacer [4] first, then install the side rails [5].

Stagger the piston ring end gaps 120° apart from each other.

Stagger the side rail end gaps as shown.

After installation, the rings should rotate freely in the ring groove.

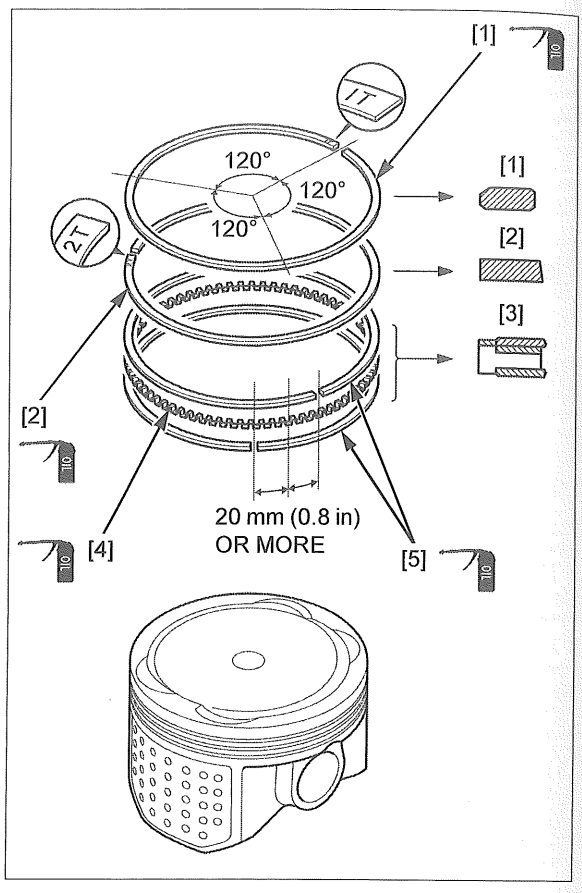

PISTON/CONNECTING ROD INSTALLATION

NOTICE

- *While installing the piston, be careful not to damage the top surface of the cylinder, especially around the cylinder bore.*
- *Be careful not to damage the cylinder sleeve with the connecting rod.*

Apply engine oil to the piston and cylinder sliding surface.

Install the piston/connecting rod assemblies [1] into the cylinders using a commercially available piston ring compressor tool [2].

NOTE:

- Install the piston/connecting rod assembly with the "IN" mark [3] facing the intake side.
- Make sure the piston ring compressor tool sits flush on the top surface of the cylinder.
- When reusing the connecting rods, they must be installed in their original locations.
- Use the handle of a plastic hammer or equivalent tool to tap the piston into the cylinder.

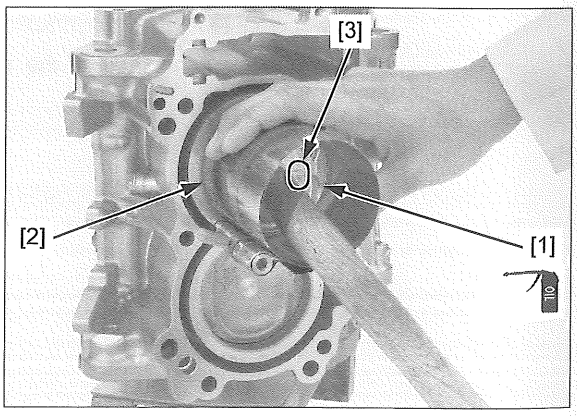

Install the crankshaft (page 14-5).

15. ENGINE REMOVAL/INSTALLATION

SERVICE INFORMATION 15-2

COMPONENT LOCATION 15-3

ENGINE REMOVAL 15-4

ENGINE INSTALLATION 15-9

SERVICE INFORMATION

GENERAL

- A hoist or equivalent is required to support the motorcycle when removing and installing the engine.
- When removing/installing the engine, tape the frame around the engine beforehand for frame protection.
- When installing the engine, be sure to tighten the engine mounting fasteners to the specified torque in the specified sequence. If you mistake the torque or sequence, loosen all mounting fasteners, then tighten them again to the specified torque in the correct sequence.
- The following components can be serviced with the engine installed in the frame.
  - CKP sensor (page 4-60)
  - Starter motor (page 6-5)
  - Throttle body (page 7-13)
  - EVAP purge control solenoid valve/canister (page 7-15)
  - Water pump (page 8-10)
  - Oil pump (page 9-4)
  - Rocker arm (page 10-5)
  - Dual clutch (page 11-46)
  - Primary drive gear (page 11-50)
  - Shift control motor, reduction gear (page 11-52)
  - Gearshift linkage (page 11-54)
  - Flywheel (page 12-4)
  - Stator (page 12-9)
- The following components require engine removal for service.
  - Camshaft (page 10-10)
  - Cylinder head/valves (page 10-13)
  - Transmission (page 13-5)
  - Balancer (page 13-12)
  - Crankshaft (page 14-4)
  - Piston/cylinder (page 14-12)

COMPONENT LOCATION

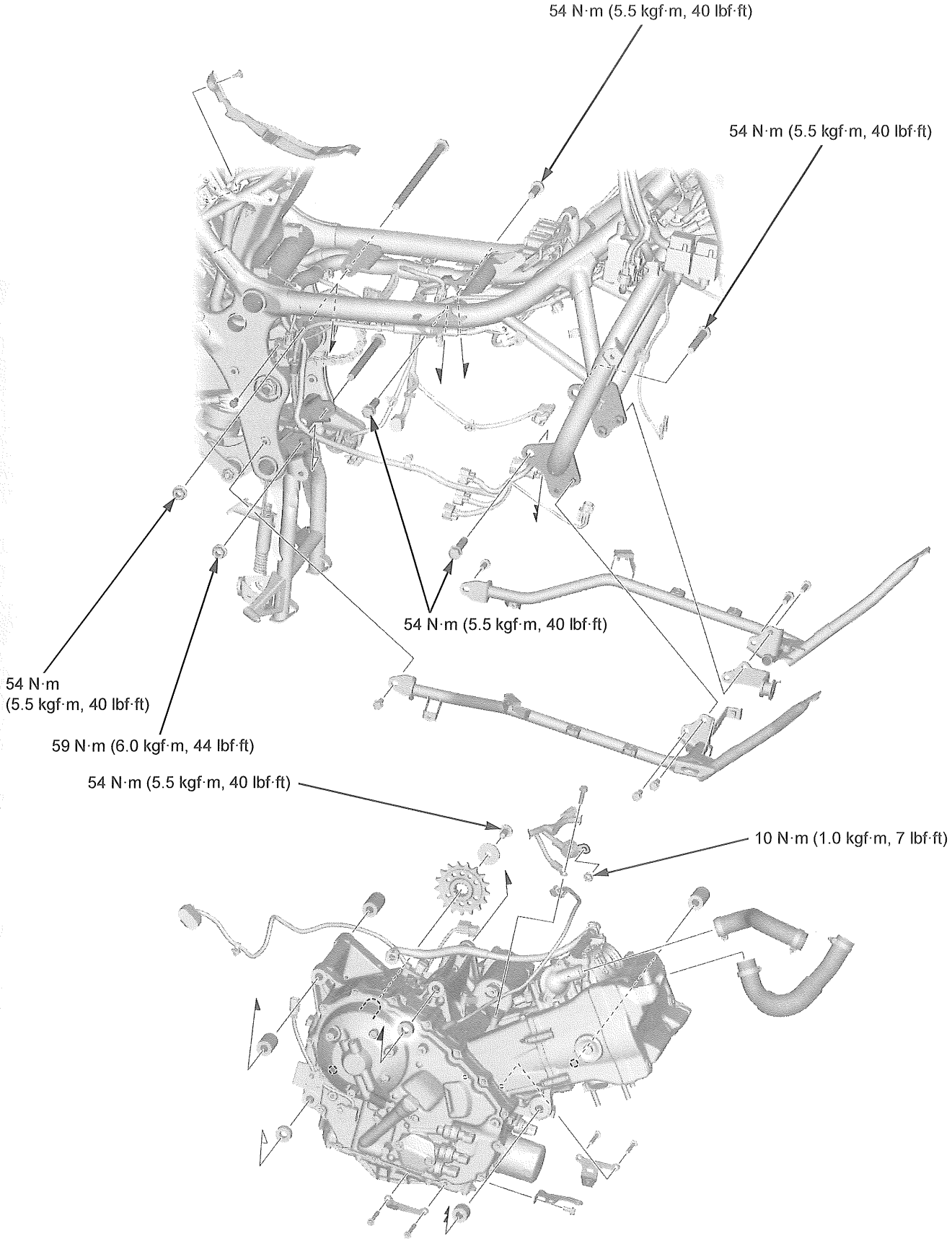

ENGINE REMOVAL

Drain the engine oil (page 3-10).

Support the motorcycle using a safety stand or hoist, raise the rear wheel off the ground.

Remove the following:

- Exhaust pipe/muffler (page 2-34)
- Radiator (page 8-7)
- No.1/2 ignition coil (page 5-9)
- Throttle body (page 7-13)
- Luggage box/battery box (page 2-26)
- Radiator reserve tank (page 8-12)
- Horn (page 21-20)
- Left floor stay (page 12-3)
- Right floor stay (page 11-38)
- Left rear cover (page 2-36)

Disconnect the alternator 3P (Gray) connector [1].

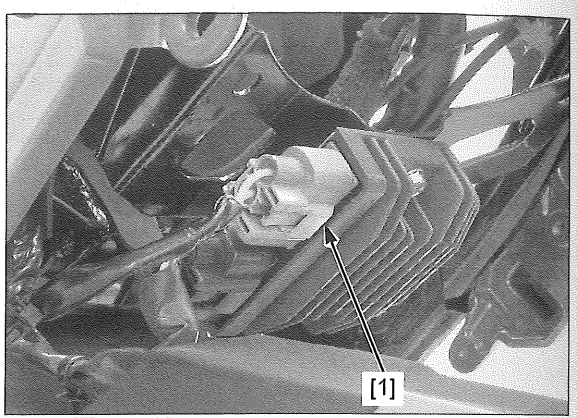

Remove the socket bolt [1].

Release the wire clip [2] from the harness guard [3].

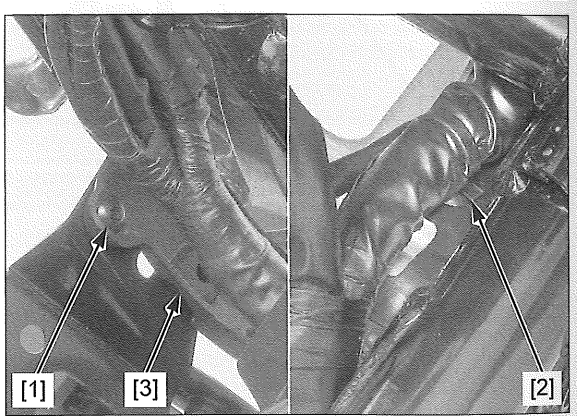

Disconnect the EOP switch 1P (Gray) connector [1].

Disconnect the clutch EOP sensor 3P connectors [2].

Release the wire clip [3] from the stay.

Remove the bolt [4] and release the wire clamp [5] and main wire harness [6].

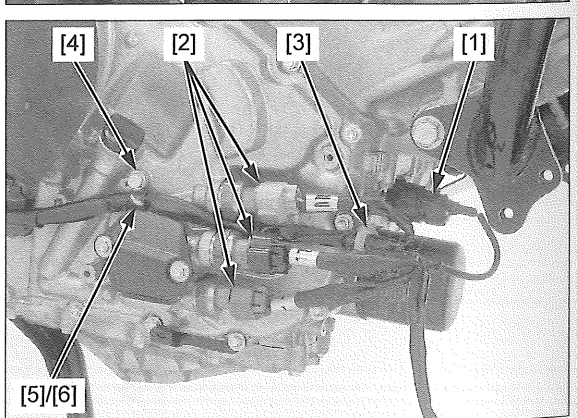

Release the wire clip [1] from the stay [2].

Release the shift spindle angle sensor 3P connector [3] from the stay [4] and disconnect it.

Remove the bolt [5] and release the stay from the engine.

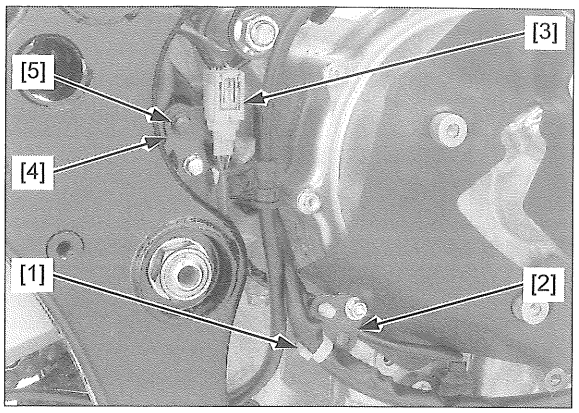

Remove the wire clip [1].

Loosen the water hose band screw [2] and remove the radiator hose [3].

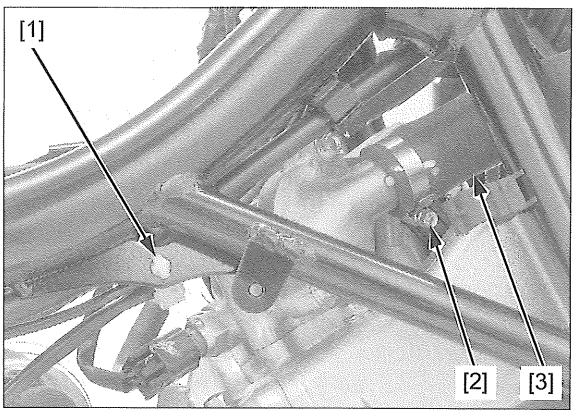

Disconnect the ECT sensor 2P (Black) connector [1] and fuel injector 2P (Gray) connectors [2].

Remove the main wire harness clamp [3] from the fuel rail [4].

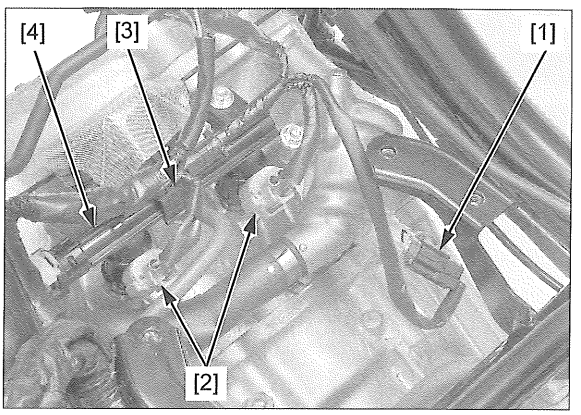

Loosen the water hose band screw [1] and remove the radiator hose [2].

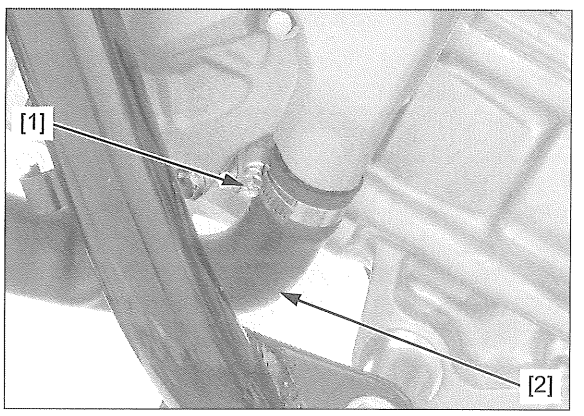

Disconnect the following:

- Inner mainshaft sensor 3P (Black) connector [1]
- Outer mainshaft sensor 3P (Black) connector [2]
- VS sensor 3P (Black) connector [3]
- EOT sensor 3P (Black) connector [4]

Release the wire clip [5].

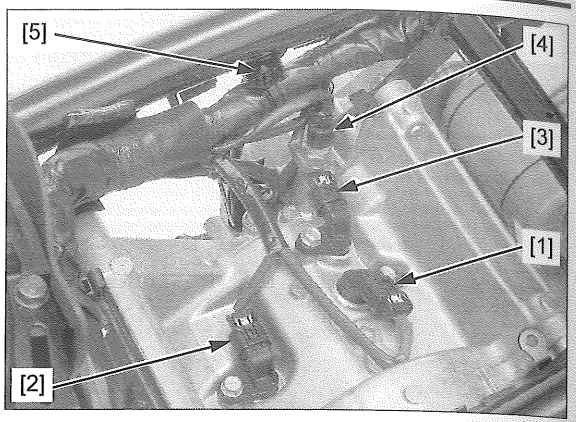

Release the boot [1].

Remove the nut/washer [2] and release the starter motor cable [3].

Remove the bolt [4] and release the battery (–) negative cable [5].

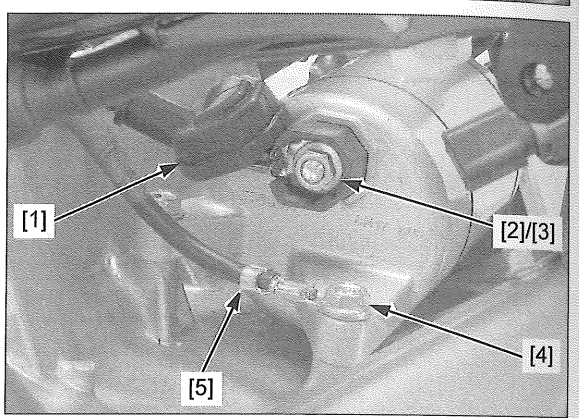

Fully slacken the drive chain (page 3-15).

Remove the drive sprocket bolt [1], washer [2], and drive sprocket [3] from the countershaft and drive chain.

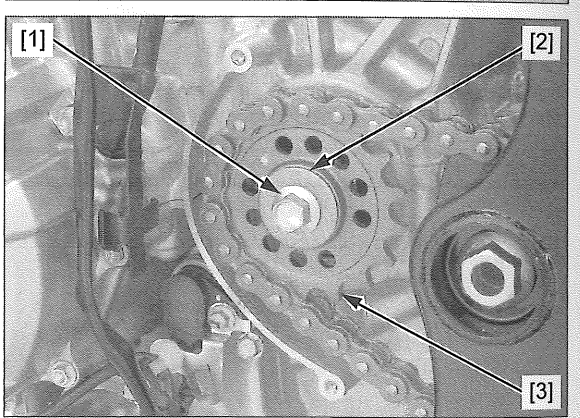

Remove the TR sensor 4P (Black) connector [1] from the stay and disconnect it.

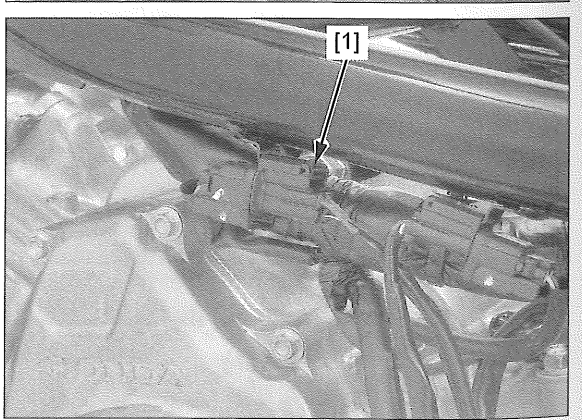

Remove the flange bolts [1] and CKP sensor guard [2].

Disconnect the CKP sensor 3P (Black) connector [3].

Remove the wire band [4].

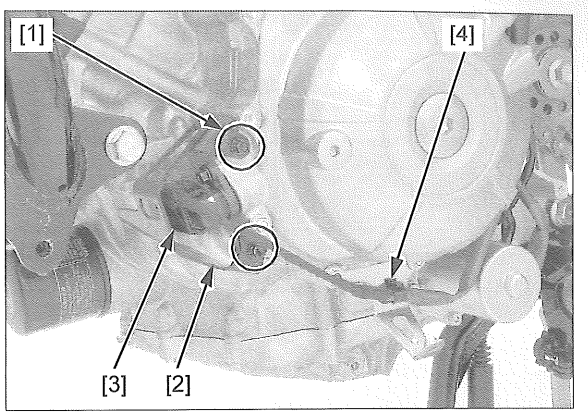

Disconnect the shift control motor 2P (Black) connector [1].

Remove the wire band [2].

Release the sidestand switch wire clip [3].

Release the wires from the stay [4].

Disconnect the neutral switch connector [5].

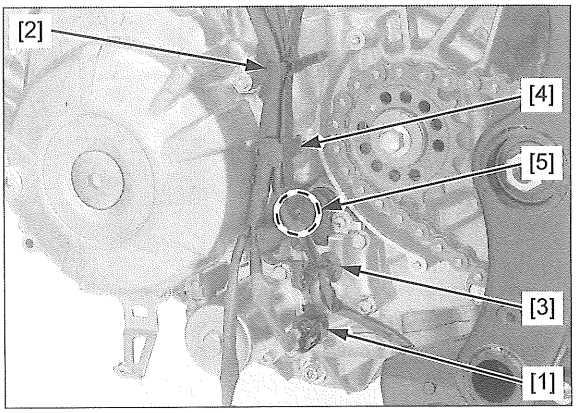

Remove the fuel tray drain hose [1] and EVAP canister drain hose [2].

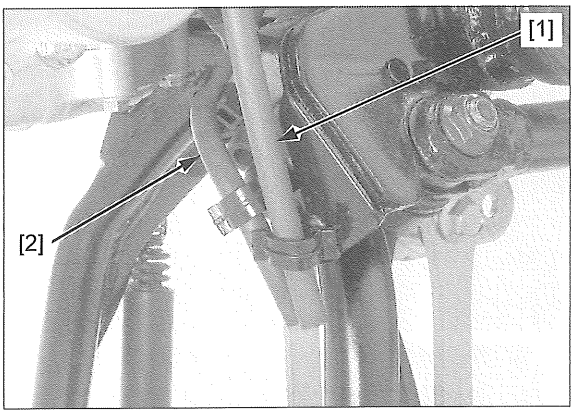

Support the engine using a jack or other adjustable support to ease of engine hanger bolts removal.

NOTE:

- The jack height must be continually adjusted to relieve stress for ease of bolt removal.
- Mark and store all the engine hanger nuts, bolts, and collars to ensure that they are reinstalled in their original locations.

Remove the following:

– Left front upper engine hanger bolt (12 x 35 mm) [1]
– Right front upper engine hanger bolt (12 x 45 mm) [2]
– 10 mm Collar [3]

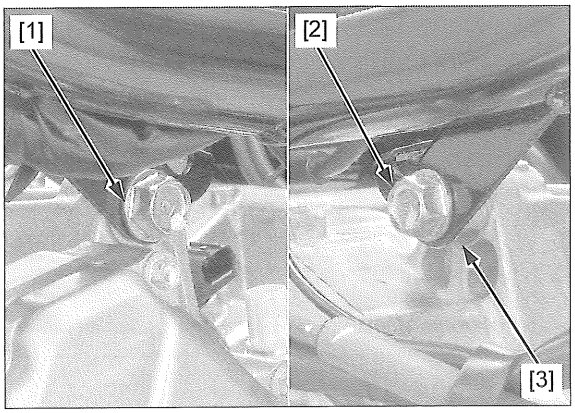

Remove the following:

– Rear upper engine hanger nut (12 mm) [1]
– 38 mm Collar [2]
– 48 mm Collar [3]
– Rear upper engine hanger bolt (12 x 276 mm) [4]

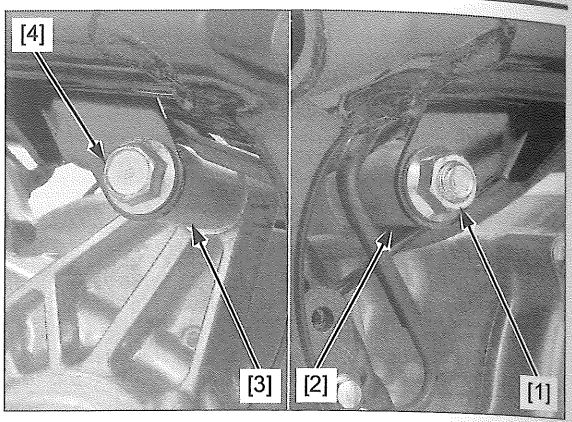

Remove the following:

– Left front lower engine hanger bolt (12 x 80 mm) [1]
– 41 mm Collar [2]
– Right front lower engine hanger bolt (12 x 55 mm) [3]
– 20 mm Collar [4]

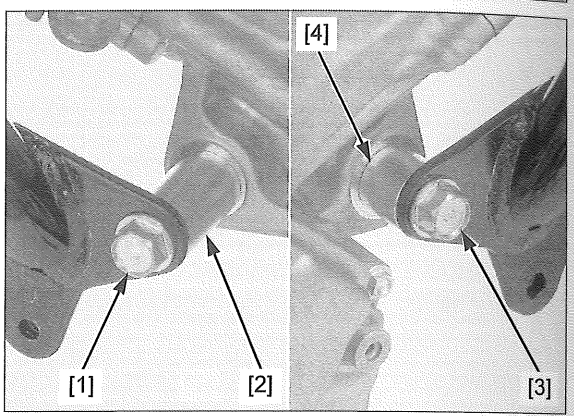

Remove the following:

– Rear lower engine hanger nut (12 mm, black) [1]
– 10 mm Collar [2]
– Rear lower engine hanger bolt (12 x 168 mm) [3]

Carefully maneuver the engine and remove it out of the frame to the right.

NOTE:

• During engine removal, hold the engine securely and be careful not to damage the frame and engine.

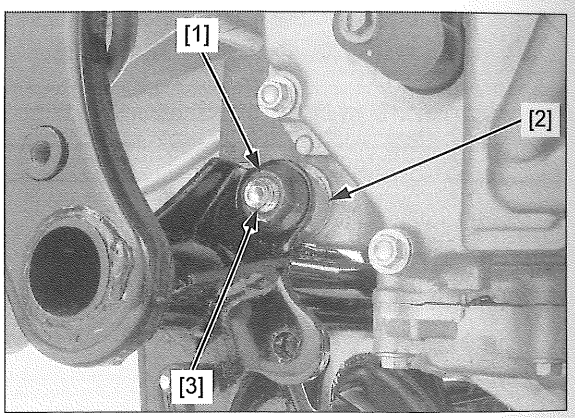

ENGINE INSTALLATION

NOTE:

- Tighten the bolts and nuts to the specified torque in the specified sequence.
- Carefully align the mounting points with the jack to prevent damage to engine, frame, water hoses, brake pipes, wires, and cables.
- The jack height must be continually adjusted to relieve stress for ease bolt installation.
- Route the hoses, wires, and cables properly (page 1-20).

Place the jack or other adjustable support under the engine and set the engine in the frame.

NOTE:

- Position the engine on the left side of the frame to easily install the collars.

Loosely install the following:

– 10 mm collar [1]
– Rear lower engine hanger bolt (12 x 168 mm) [2]
– Rear lower engine hanger nut (12 mm, black) [3]

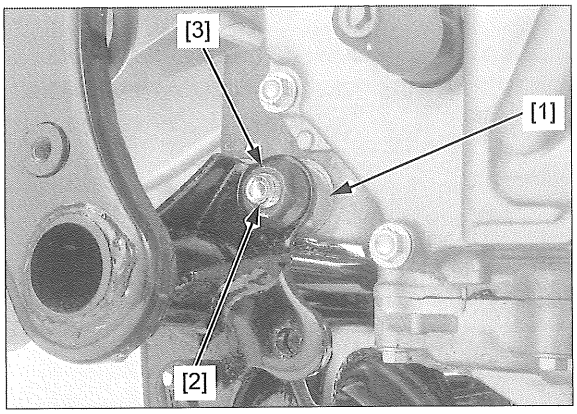

Set the wires before installing the 38 mm [1] collar as shown.

– Rear wheel speed sensor wire [2]
– Canister-to-EVAP purge control solenoid valve hose [3]

Loosely install the following:

– 48 mm collar [4]
– 38 mm collar
– Rear upper engine hanger bolt (12 x 276 mm) [5]
– Rear upper engine hanger nut (12 mm) [6]

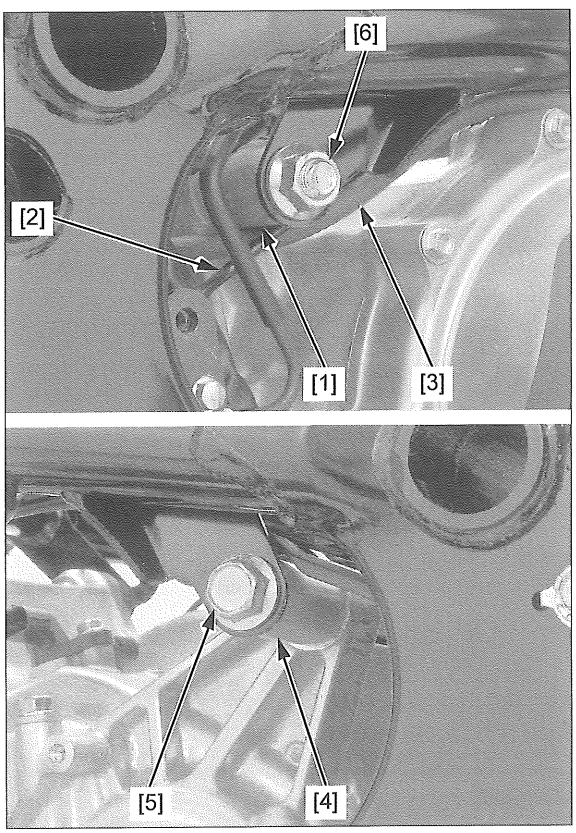

Loosely install the following:

- Left front upper engine hanger bolt (12 x 35 mm) [1]
- 10 mm collar [2]
- Right front upper engine hanger bolt (12 x 45 mm) [3]

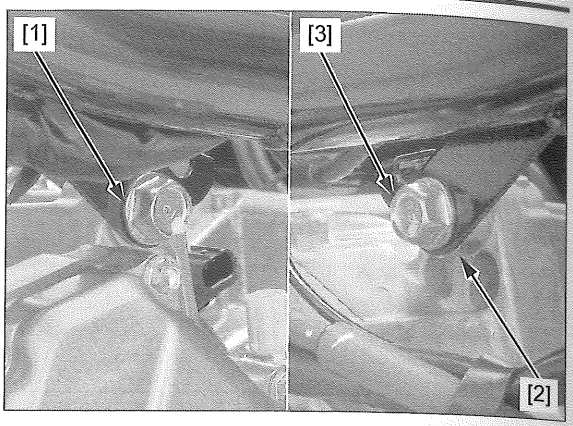

Loosely install the following:

- 41 mm Collar [1]
- Left front lower engine hanger bolt (12 x 80 mm) [2]
- 20 mm Collar [3]
- Right front lower engine hanger bolt (12 x 55 mm) [4]

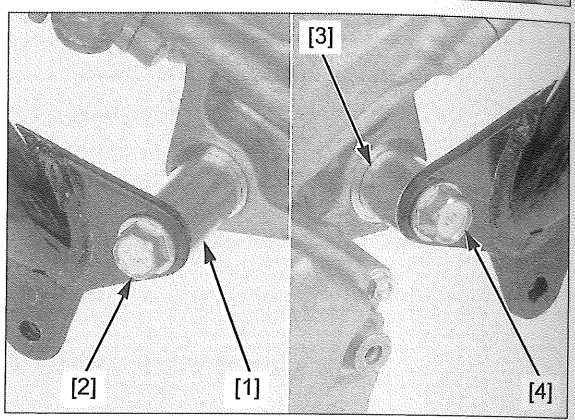

Tighten the rear lower engine hanger nut (12 mm, black) [1] to the specified torque.

TORQUE: 59 N·m (6.0 kgf·m, 44 lbf·ft)

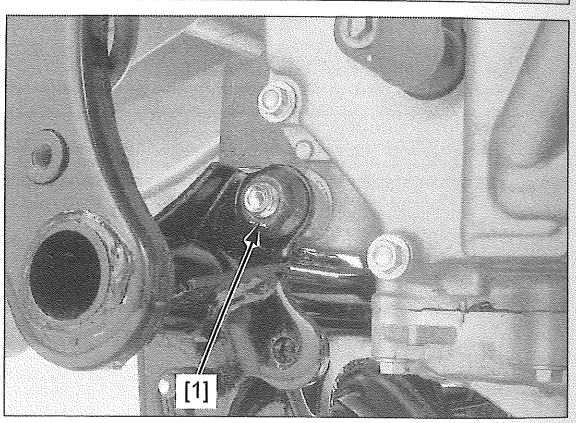

Tighten the left front lower engine hanger bolt (12 x 80 mm) [1] to the specified torque.

TORQUE: 54 N·m (5.5 kgf·m, 40 lbf·ft)

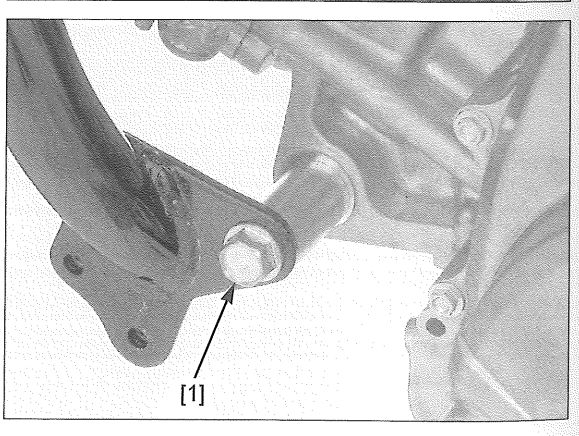

Tighten the right front lower engine hanger bolt (12 x 55 mm) [1] to the specified torque.

TORQUE: 54 N·m (5.5 kgf·m, 40 lbf·ft)

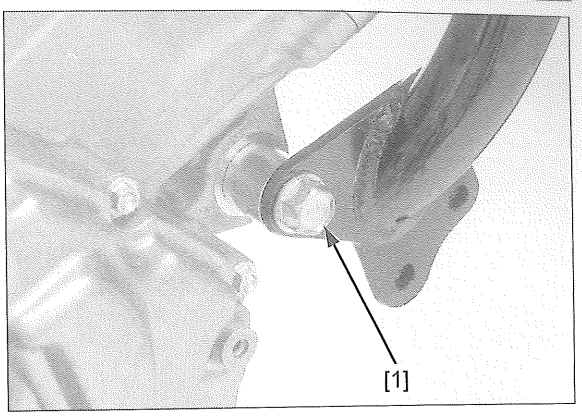

Tighten the left front upper engine hanger bolt (12 x 35 mm) [1] to the specified torque.

TORQUE: 54 N·m (5.5 kgf·m, 40 lbf·ft)

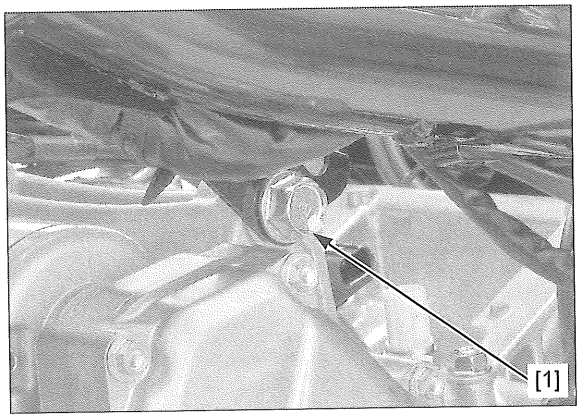

Tighten the right front upper engine hanger bolt (12 x 45 mm) [1] to the specified torque.

TORQUE: 54 N·m (5.5 kgf·m, 40 lbf·ft)

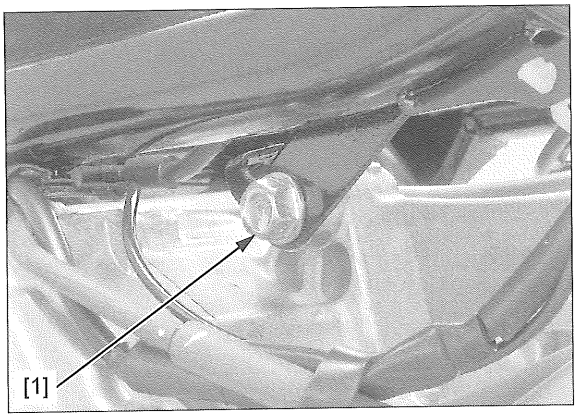

Tighten the rear upper engine hanger nut (12 mm) [1] to the specified torque.

TORQUE: 54 N·m (5.5 kgf·m, 40 lbf·ft)

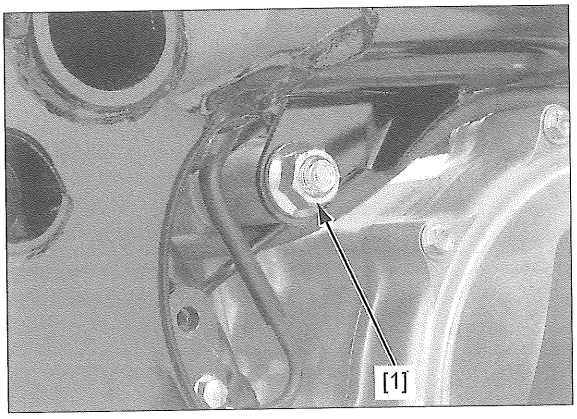

Install the fuel tray drain hose [1] and EVAP canister drain hose [2].

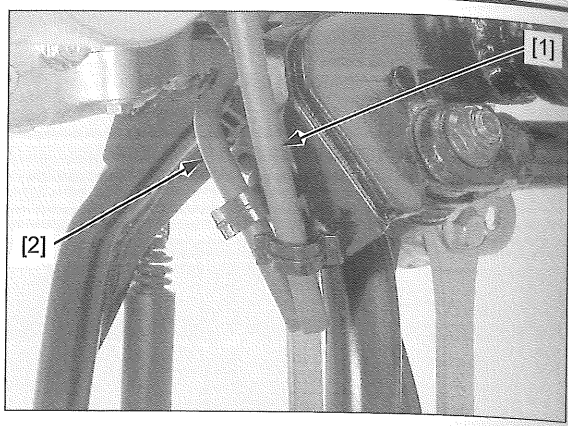

Connect the neutral switch connector [1].

Install the wires to the stay [2].

Install the sidestand switch wire clip [3].

Install the wire band [4].

Connect the shift control motor 2P (Black) connector [5].

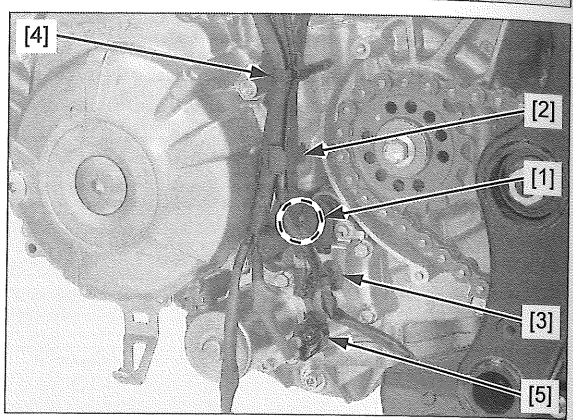

Install the wire band [1].

Connect the CKP sensor 3P (Black) connector [2].

Install the crank sensor guard [3] and flange bolts [4].

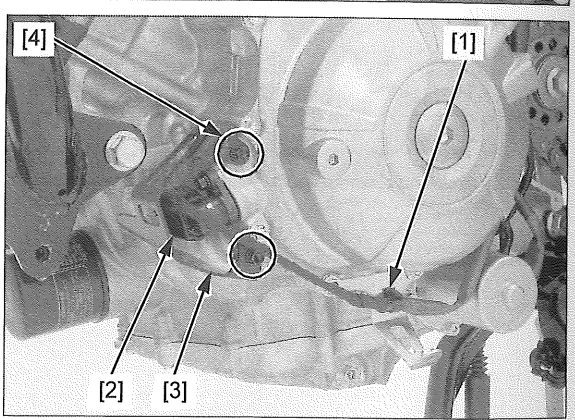

Connect the TR sensor 4P (Black) connector [1] and install it onto the stay.

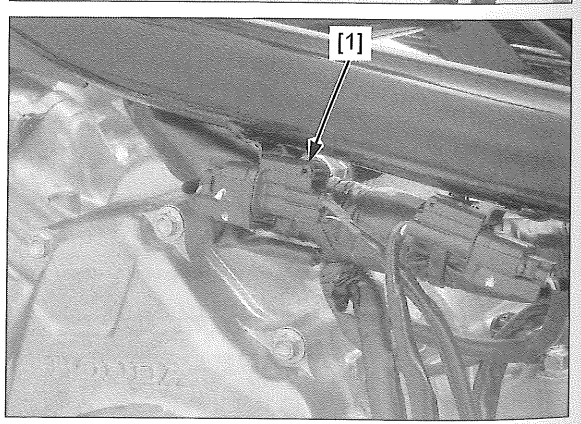

Install the drive sprocket [1] to the drive chain and countershaft with the mark [2] side facing outside.

Install the washer [3] and drive sprocket bolt [4].

Tighten the drive sprocket bolt to the specified torque.

TORQUE: 54 N·m (5.5 kgf·m, 40 lbf·ft)

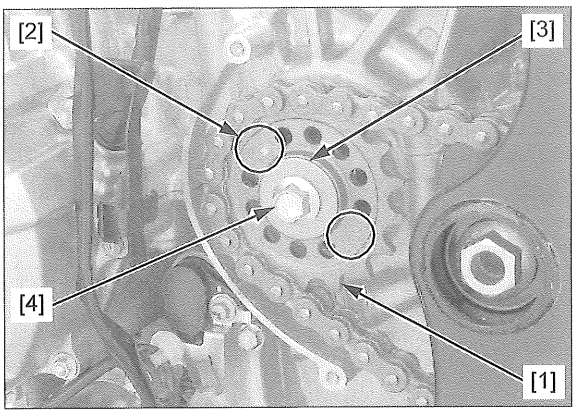

Connect the starter motor cable [1] and tighten the terminal nut/washer [2] to the specified torque.

TORQUE: 10 N·m (1.0 kgf·m, 7 lbf·ft)

Reposition the rubber cap [3] properly on the starter motor terminal.

Install the battery (–) negative cable [4] and tighten the bolt [5] securely.

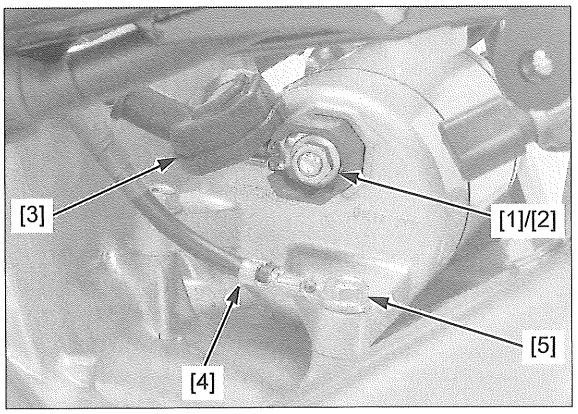

Connect the following:

- Inner mainshaft sensor 3P (Black) connector [1]
- Outer mainshaft sensor 3P (Black) connector [2]
- VS sensor 3P (Black) connector [3]
- EOT sensor 3P (Black) connector [4]

Install the wire clip [5].

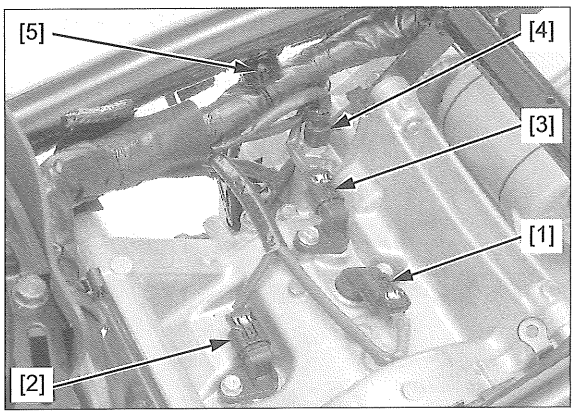

Install the radiator hose [1] and tighten the water hose band screw [2].

Tighten the hose band screw to the specified range (page 8-7).

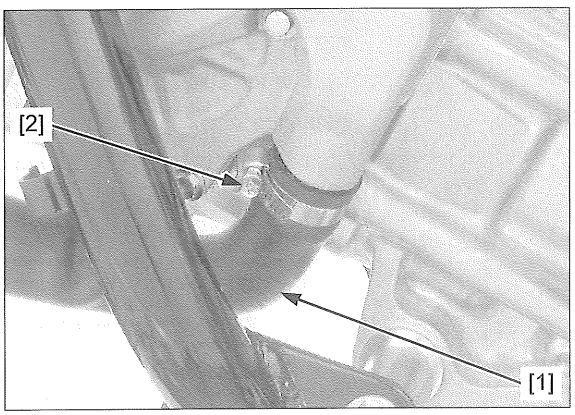

Install the main wire harness clamp [1] onto the fuel rail [2].

Connect the fuel injector 2P (Gray) connectors [3] and ECT sensor 2P (Black) connector [4].

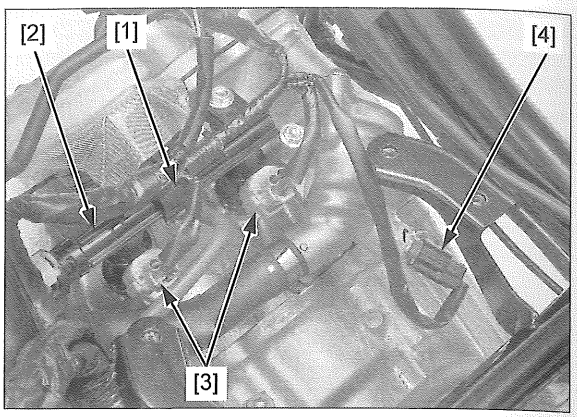

Install the wire clip [1].

Install the upper radiator hose [2] onto the thermostat cover by aligning the paint mark with the index mark.

Tighten the hose band screw [3] to the specified range (page 8-8).

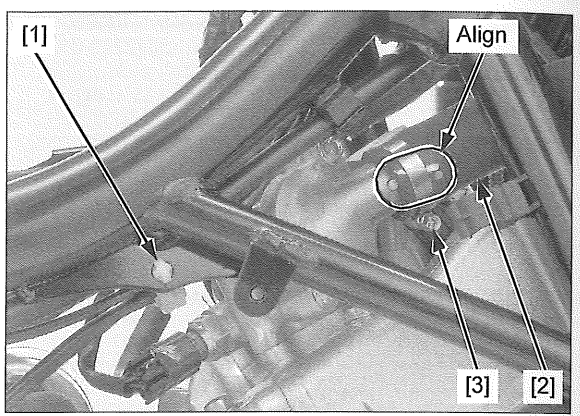

Install the stay [1] and bolt [2] and tighten the bolt securely.

Connect the shift spindle angle sensor 3P connector [3] and install it to the stay.

Install the wire clip [4] to the stay [5].

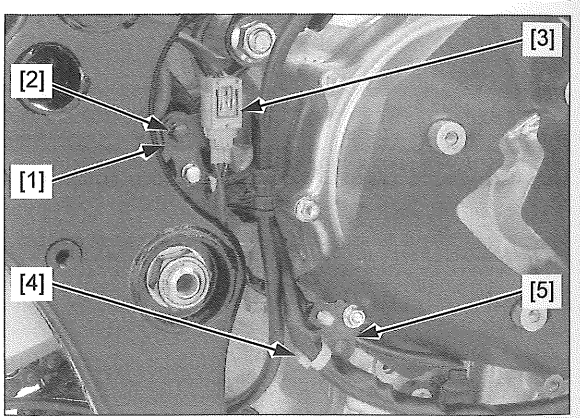

Install the main wire harness [1], wire clamp [2], and bolt [3].

Tighten the bolt securely.

Install the wire clip [4] to the stay.

Connect the clutch EOP sensor 3P connectors to the proper sensor.

- Upper: No.2 clutch EOP sensor (Light gray) [5]
- Middle: Clutch line EOP sensor (Black) [6]
- Lower: No.1 clutch EOP sensor (Dark gray) [7]

Connect the EOP switch 1P (Gray) connector [8].

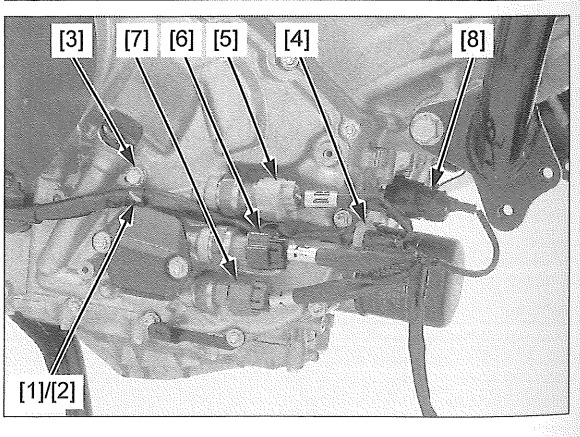

Install the wire clip [1] to the harness guide [2].

Install the socket bolt [3].

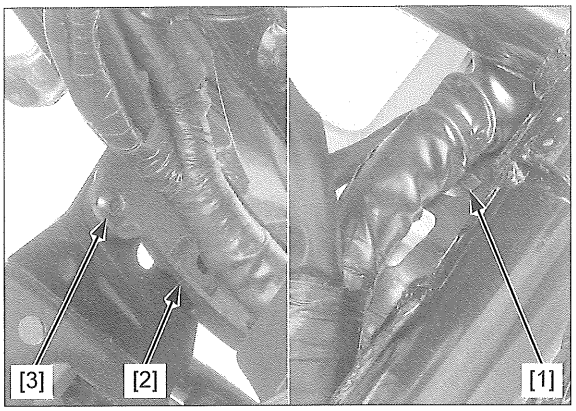

Connect the alternator 3P (Gray) connector [1].

Install the following:

- Exhaust pipe/muffler (page 2-34)
- Radiator (page 8-8)
- No.1/2 ignition coil (page 5-9)
- Throttle body (page 7-13)
- Luggage box/battery box (page 2-26)
- Radiator reserve tank (page 8-12)
- Horn (page 21-20)
- Left floor stay (page 12-3)
- Right floor stay (page 11-38)
- Left rear cover (page 2-36)

Fill the engine with the recommended engine oil (page 3-10).

Adjust the drive chain slack (page 3-8).

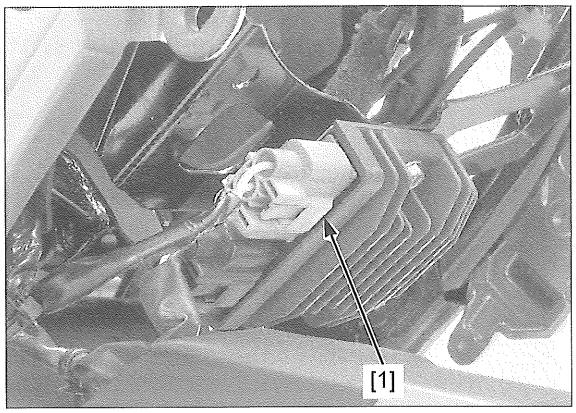

16. FRONT WHEEL/SUSPENSION/STEERING

SERVICE INFORMATION 16-2

TROUBLESHOOTING 16-2

COMPONENT LOCATION 16-3

HANDLEBAR 16-4

FRONT WHEEL 16-11

FORK 16-15

STEERING STEM 16-29

SERVICE INFORMATION

GENERAL

- When servicing the front wheel, fork, or steering stem, support the motorcycle using a safety stand or hoist.
- A contaminated brake disc or pad reduces stopping power. Discard contaminated pads and clean a contaminated disc with a high quality brake degreasing agent.
- Do not operate the brake lever after removing the caliper and front wheel.
- After the front wheel installation, check the brake operation by applying the brake lever.
- Use only tires marked "TUBELESS" and tubeless valves on rim marked "TUBELESS TIRE APPLICABLE".
- For brake system information (page 18-2)

TROUBLESHOOTING

Hard steering
- Steering stem adjusting nut too tight
- Damaged steering head bearings
- Insufficient tire pressure
- Faulty tire

Steers to one side or does not track straight
- Faulty steering head bearing
- Loose steering stem adjusting nut
- Bent slide pipe assembly
- Bent axle
- Worn or damaged wheel bearing
- Bent frame

Front wheel wobbling
- Bent rim
- Worm or damaged wheel bearing
- Insufficient tire pressure
- Faulty tire
- Unbalanced tire and wheel
- Axle not tightened properly

Wheel hard to turn
- Faulty wheel bearing
- Bent axle
- Brake drag

Soft suspension
- Insufficient fork fluid
- Incorrect fork fluid viscosity
- Weak fork spring
- Insufficient tire pressure

Stiff suspension
- Bent slide pipe assembly
- To much fluid in fork
- Incorrect fork fluid viscosity
- Clogged fork fluid passage
- High tire pressure

Front suspension noisy
- Insufficient fork fluid
- Loose fork fasteners
- Bent slide pipe assembly

COMPONENT LOCATION

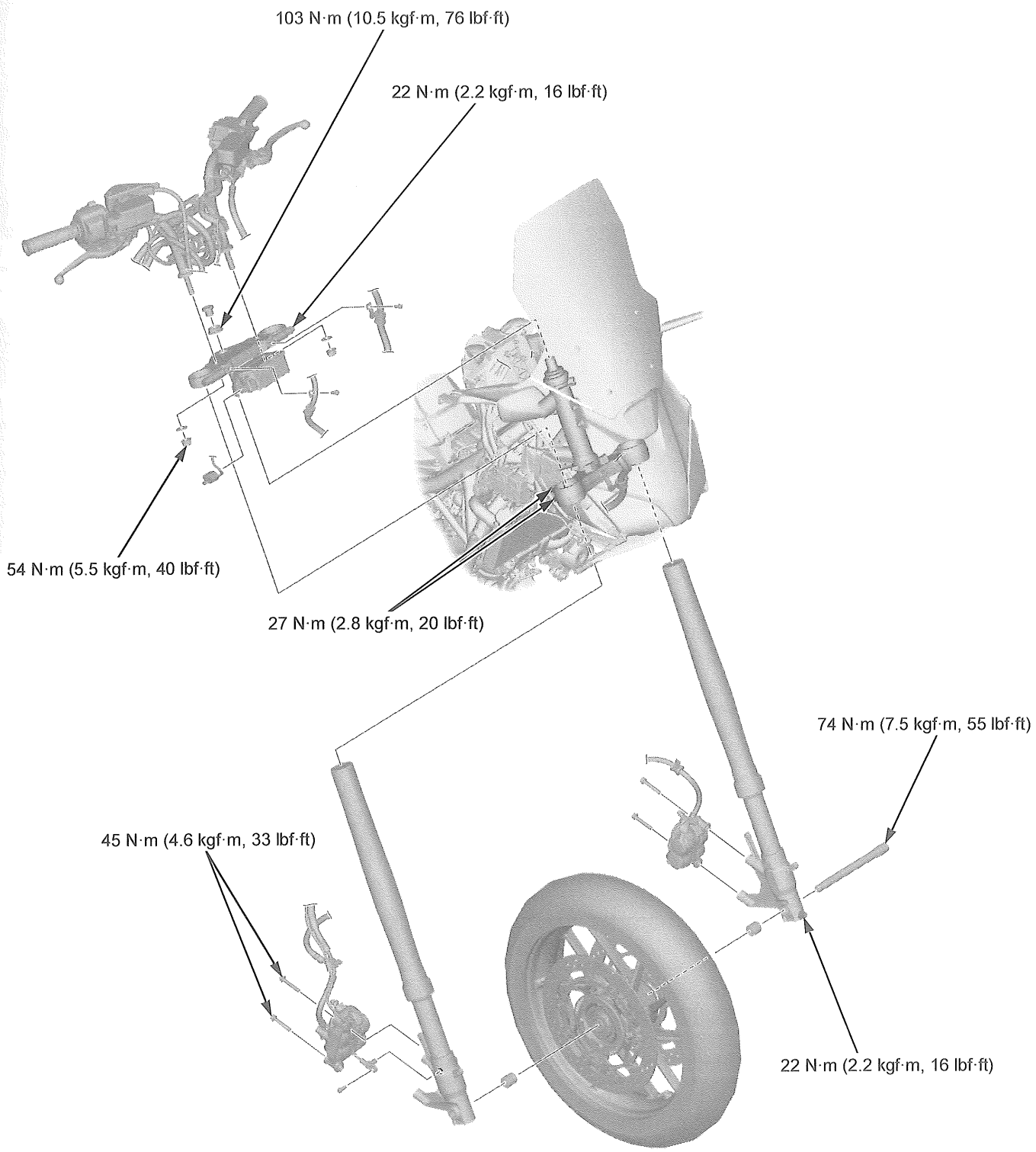

HANDLEBAR

REMOVAL

Remove the following:

- Handle rear covers (page 2-9)
- BCU (page 21-23)
- Handlebar weight (page 16-10)
- Harness clips [1]
- Wire bands [2]
- Parking brake cable [3] (from the handlebar stay)
- Bolts [4]

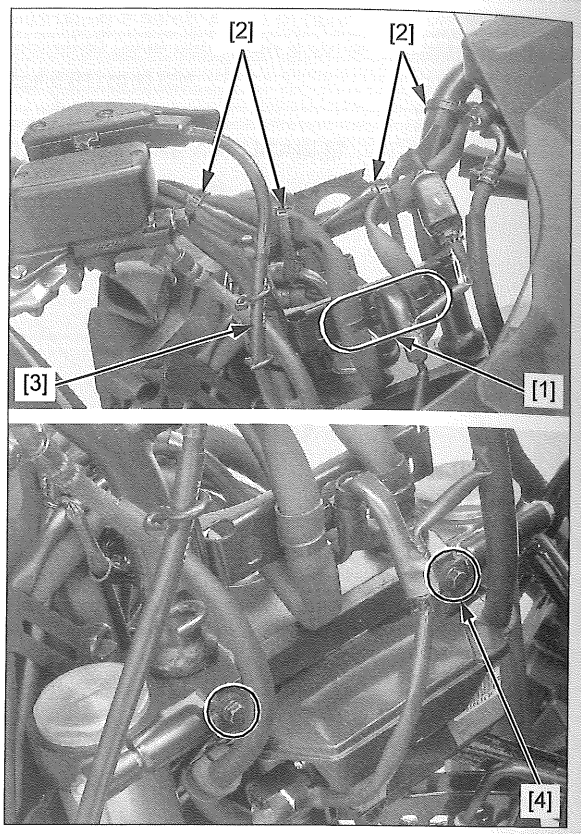

Disconnect the rear brake light switch connectors [1].

Remove the bolts [2], holder [3], and rear brake master cylinder [4].

NOTE:

- Keep the brake master cylinder upright to prevent air from entering the hydraulic system.

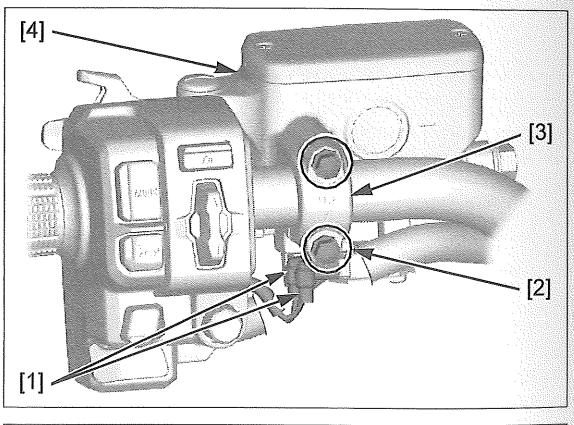

Remove the screws [1] and left handlebar switch housing [2].

Remove the left handlebar grip [3] if it necessary.

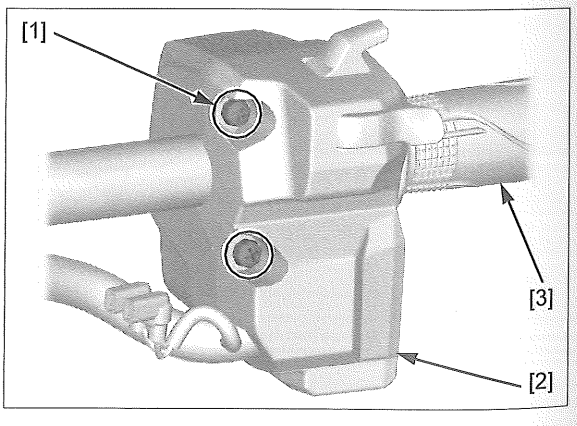

Disconnect the front brake light switch connectors [1].

Remove the bolts [2], holder [3], and front brake master cylinder [4].

NOTE:

- Keep the brake master cylinder upright to prevent air from entering the hydraulic system.

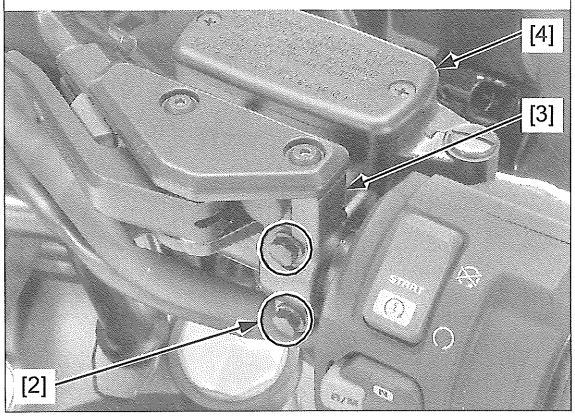

Remove the screws/washers [1] and separate the right handlebar switch housing [2].

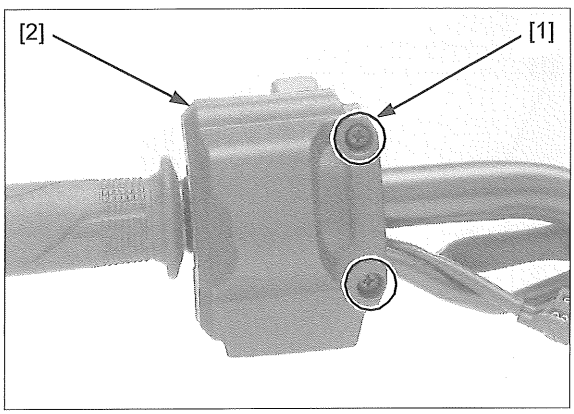

Remove the screw [1].

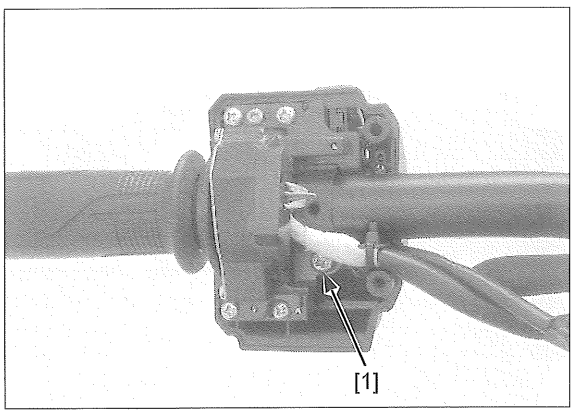

Remove the nuts [1], washers [2] and handlebar [3].

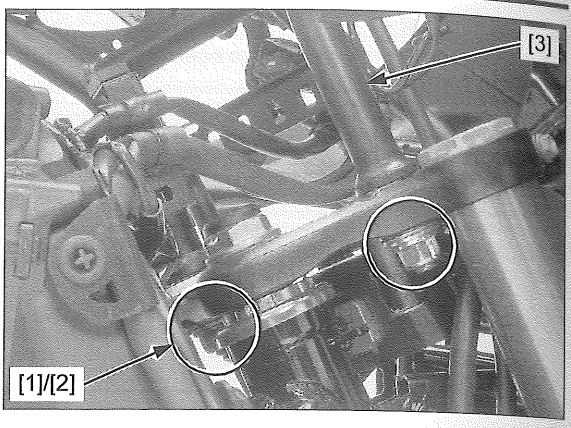

THROTTLE GRIP REMOVAL/ INSTALLATION

RIGHT SIDE

Remove the APS (page 16-4).

Remove the screws [1], APS [2] and throttle grip [3].

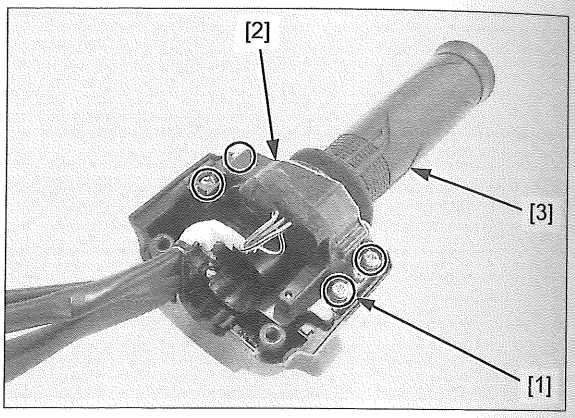

Remove the holder [1].

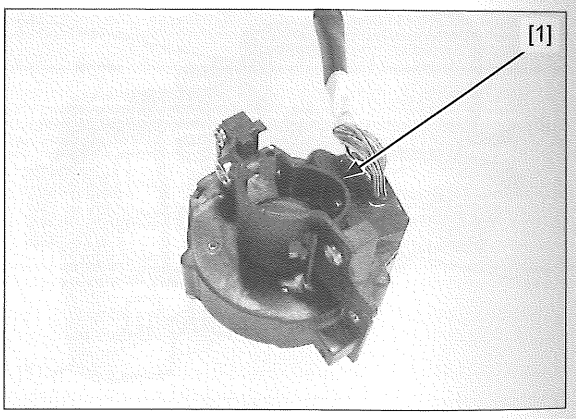

Installation is in the reverse order of removal.

NOTE:

- Apply grease to the throttle grip [1] and APS [2] contacting surfaces as shown.

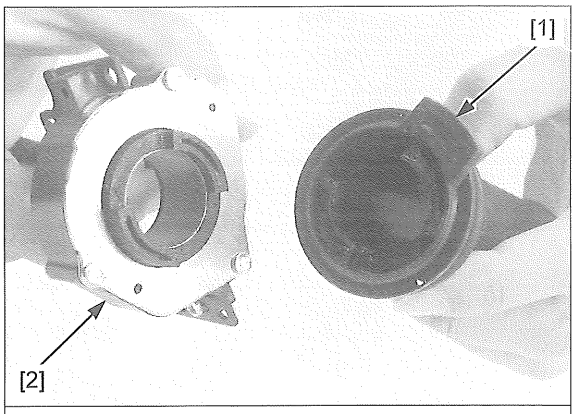

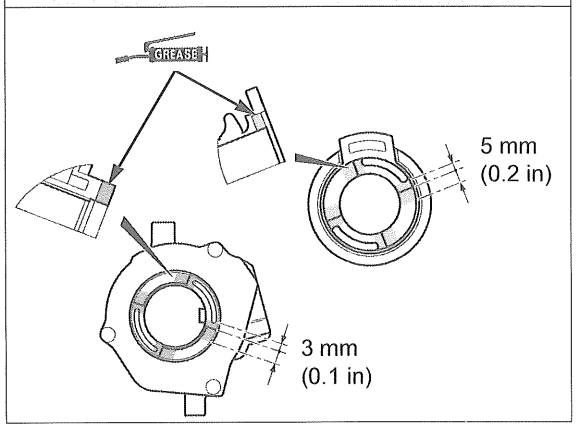

LEFT SIDE

Clean the inside surface of the handlebar grip [1] and outside surface of the handlebar [2].

Apply Honda Bond A or equivalent to the inside surface of the grip and clean the outside surface of the handlebar.

Allow the adhesive to dry for 1 hour before using.

Wait 3 – 5 minutes and install the grip.

Rotate the grip for even application of the adhesive.

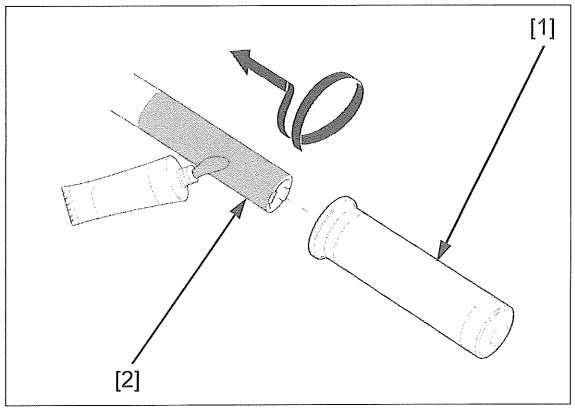

INSTALLATION

Install the handlebar [1], washers [2] and nuts [3].

TORQUE: 54 N·m (5.5 kgf·m, 40 lbf·ft)

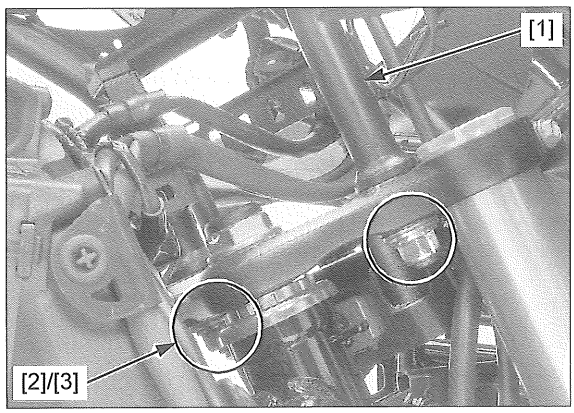

Install the right handlebar switch [1].

NOTE:

- Align the setting plate tab with the handlebar hole.

Install and tighten the screw [2] securely.

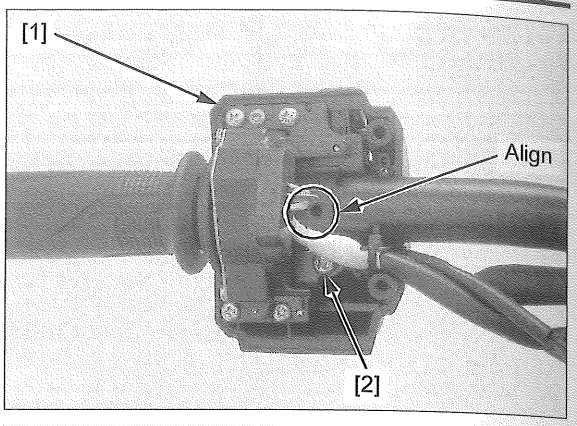

Install the right handlebar switch housing [1], screws [2] and tighten them to the specified torque.

TORQUE: 2.5 N·m (0.3 kgf·m, 1.8 lbf·ft)

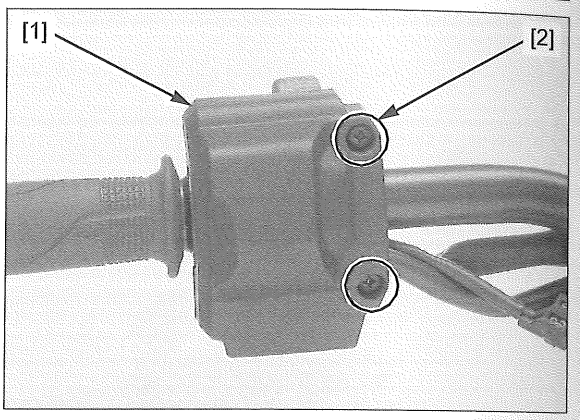

Install the front brake master cylinder [1], holder [2] and bolts [3].

Align the end of the master cylinder with the mark on the handlebar and tighten the upper bolt first, then the lower bolt to the specified torque.

TORQUE: 12 N·m (1.2 kgf·m, 9 lbf·ft)

Connect the front brake light switch connectors [4].

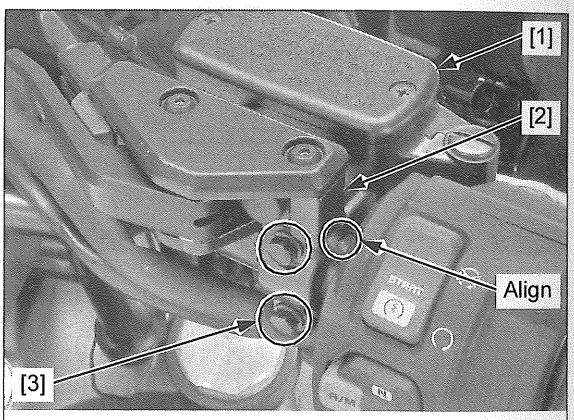

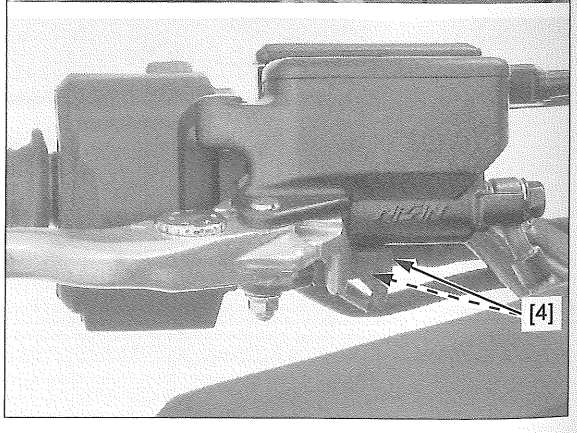

Install the left handlebar switch housing [1] by aligning the locating pin with the handlebar hole.

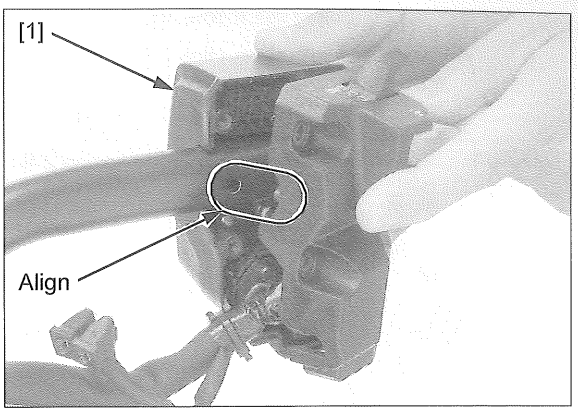

Install the screws [1] and tighten them to the specified torque.

TORQUE: 2.5 N·m (0.3 kgf·m, 1.8 lbf·ft)

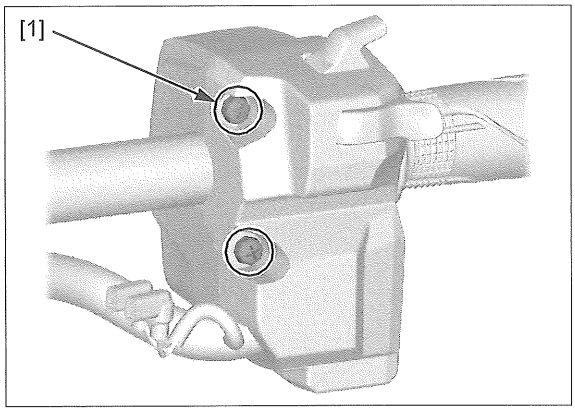

Install the rear brake master cylinder [1], holder [2] ("UP" mark [3] facing up), and bolts [4].

Align the end of the master cylinder with the mark on the handlebar and tighten the upper bolt first, then the lower bolt to the specified torque.

TORQUE: 12 N·m (1.2 kgf·m, 9 lbf·ft)

Connect the rear brake light switch connectors [5].

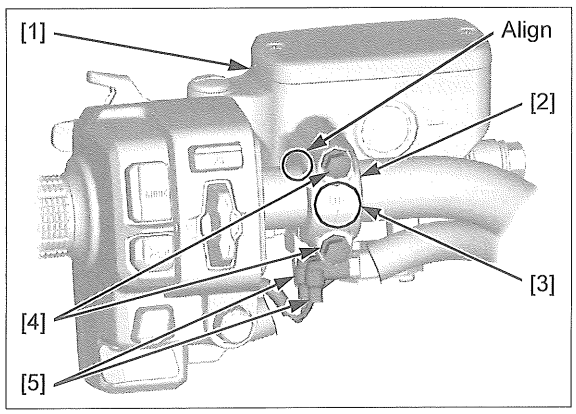

Install the following:

- Harness clips [1]
- Wire bands [2]
- Parking brake cable [3]
- Bolts [4]
- Handle rear cover (page 2-9)
- BCU (page 21-23)
- Handlebar weight (page 16-10)

NOTE:

- Route the hoses, cables, and wires properly (page 1-20).

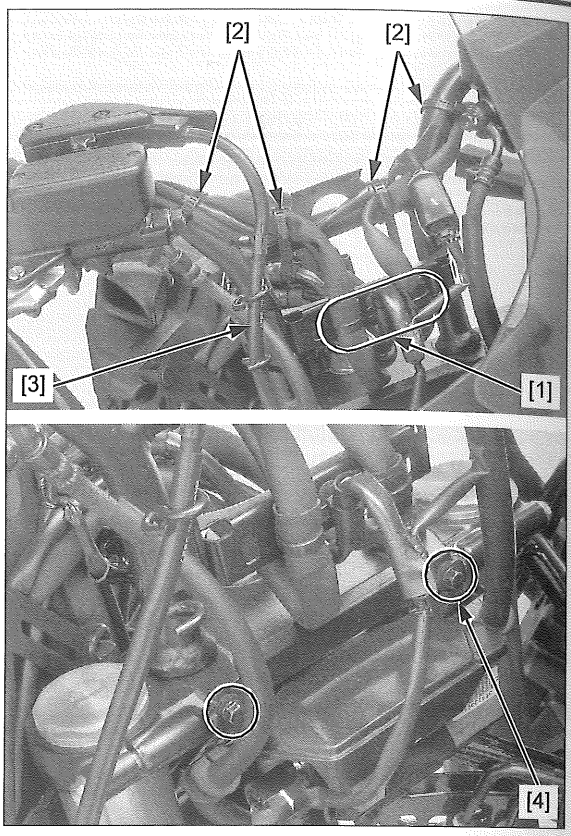

HANDLEBAR WEIGHT REMOVAL/ INSTALLATION

Turn over the grip end.

Straighten the weight retainer tab [1] by the screwdriver or punch.

Apply lubricant spray through the tab locking hole [2] to the weight rubber [3] for easy removal.

Temporarily install the handlebar weight [4] and screw, then remove the inner weight [5] by turning the handlebar weight.

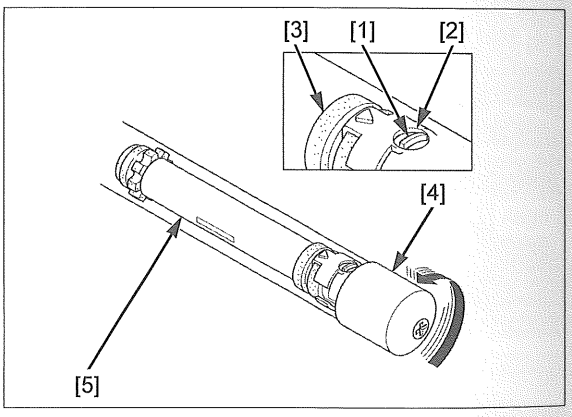

Remove the screw [1] and handlebar weight [2] from the inner weight [3].

Remove the retainer ring [4] and weight rubbers [5].

Check the wight rubbers for deterioration or damage and replace them with new ones if necessary.

Install the weight rubbers and a new retainer ring onto the inner weight.

Temporarily install the handlebar weight and screw.

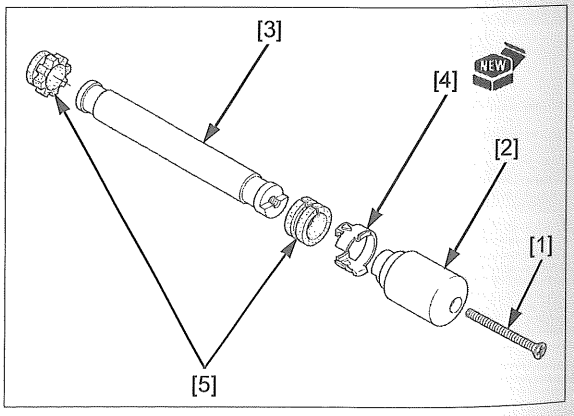

Insert the inner weight assembly [1] into the handlebar.

Turn the handlebar weight and hook the retainer ring tab [2] with the locking hole [3] in the handlebar.

Remove the screw and handlebar weight [4].

Installation is in the reverse order of removal.

TORQUE: 10 N·m (1.0 kgf·m, 7 lbf·ft)

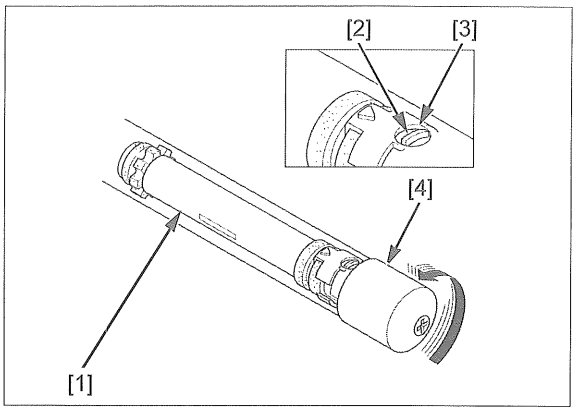

FRONT WHEEL

REMOVAL

Remove the left/right front brake calipers (page 18-7).

Support the motorcycle using a safety stand or hoist, raise the front wheel off the ground.

Loosen the front axle pinch bolt [1].

Remove the front axle [2], front wheel, and side collars [3].

NOTE:

- Do not operate the brake lever after removing the front wheel.

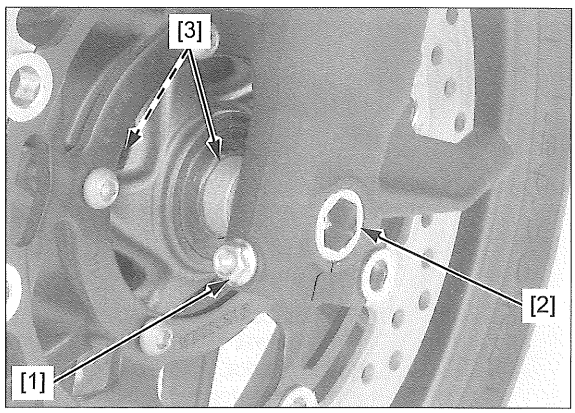

INSPECTION

Turn the inner race of each bearing with your finger.

The bearings should turn smoothly and quietly.

Also check that the outer race fits tightly in the wheel hub.

Inspect the following parts for damage, abnormal wear, deformation, or bend.

– Front axle
– Front wheel

Measure each part according to FRONT WHEEL/ SUSPENSION/STEERING SPECIFICATIONS (page 1-8).

Replace any part if it is out of service limit.

WHEEL BALANCE

NOTE:

- Carefully check balance before installing the wheel.
- The wheel balance must be checked when the tire is remounted.

Note the rotating direction marks [1] on the tire, and upon tire installation, always fit the tire so the marks face the same direction.

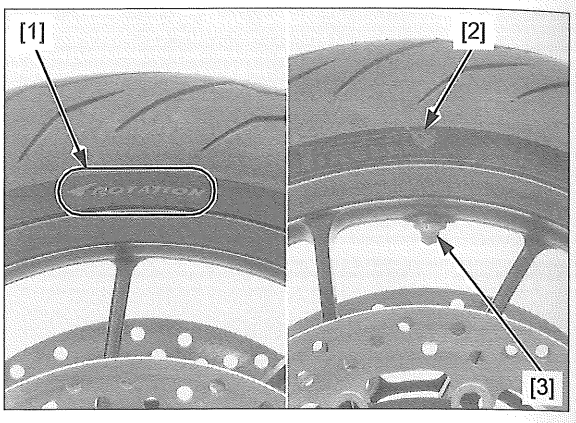

NOTE:

- For optimum balance, the tire balance mark [2] (light mass point: a paint dot on the side wall) must be located next to the valve stem [3]. Remount the tire if necessary.

Mount the wheel, tire, and brake disc assembly on an inspection stand [1].

Spin the wheel, allow it to stop, and mark the lowest (heaviest) part of the wheel with chalk.

Do this 2 or 3 times to verify the heaviest area.

If the wheel is balanced, it will not stop consistently in the same position.

To balance the wheel, install a new balance weight on the lightest side of the rim, on the side opposite the chalk marks. Add just enough weight so the wheel will no longer stop in the same position when it is spun.

Do not add more than 60 g (2.1 oz) to the wheel.

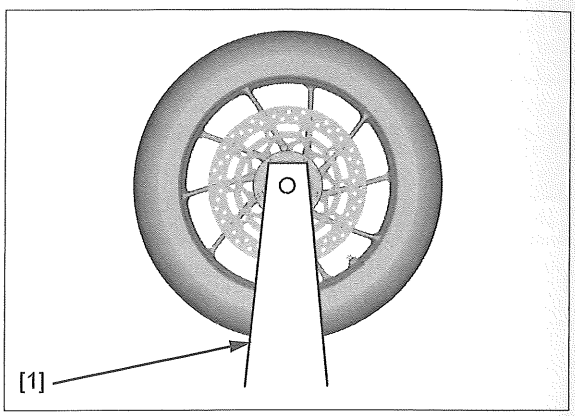

To balance the wheel, install a new balance weight [1] as shown. Add just enough weight so the wheel will no longer stop in the same position when it is spun.

Do not add more than 60 g (2.1 oz) to the wheel.

Press the weights by your hands firmly and make sure they are not come off the rim.

NOTE:

- Stick-type balance weights should be used on this motorcycle. Use Honda genuine balance weights.
  - Before installing the weights, remove any adhesive from the rim thoroughly and clean the area where new weights are to be placed with degreasing agent. Take care not to scratch the rim surface.
  - Do not touch the adhesive surface of the weight with your bare hands when installing.
  - The balance weights are always replaced with new ones whenever they are removed. Do not reuse them.
- Rear wheel only: If the weight exceeds 10 g, install same amount of the balance weights on the right and left symmetrical position.

Front Wheel:

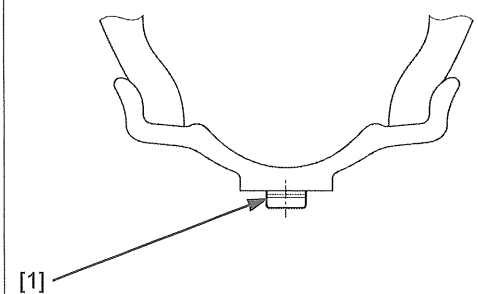

Rear Wheel:

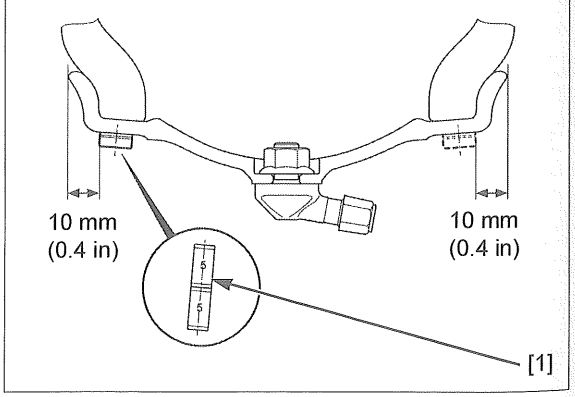

DISASSEMBLY/ASSEMBLY

NOTE:

- Replace the dust seals and front brake disc bolts with new ones.
- Apply grease to the dust seal lips.
- Install the front wheel dust seal until it is flush with the wheel hub surface.
- Install the front brake disc with the "⇨" marked side facing out.

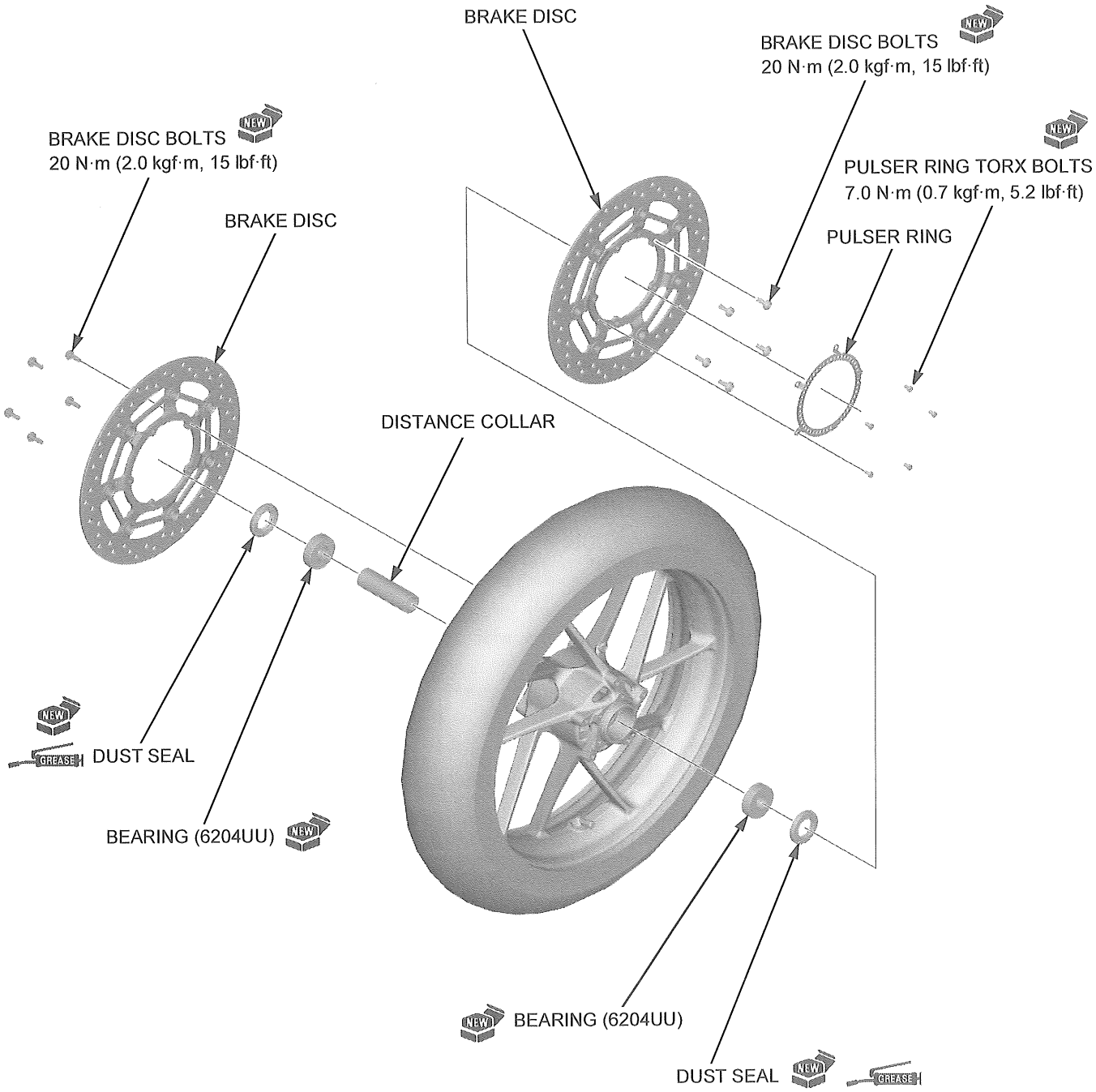

WHEEL BEARING REPLACEMENT

Install the bearing remover head [1] into the bearing [2]. From the opposite side, install the bearing remover shaft [3] and drive out the bearing from the wheel hub.

NOTE:

- Replace the wheel bearings in pairs. Do not reuse old bearings.

TOOLS:

Bearing remover head, 20 mm	**07746-0050600**
Bearing remover shaft	**07GGD-0010100**

Remove the distance collar and drive out the other bearing.

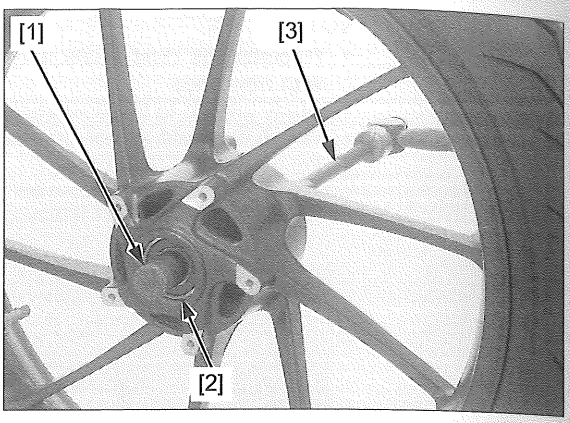

Drive in a new right side bearing [1] squarely with its marked side facing up until it is fully seated.

NOTE:

- Never install the old bearing, once the bearing has been removed, the bearing must be replaced with a new one.

Install the distance collar.

Drive in a new right side bearing squarely with its marked side facing up until it is seated on the distance collar.

TOOLS:

Driver [2]	**07749-0010000**
Attachment, 42 x 47 mm [3]	**07746-0010300**
Pilot, 20 mm [4]	**07746-0040500**

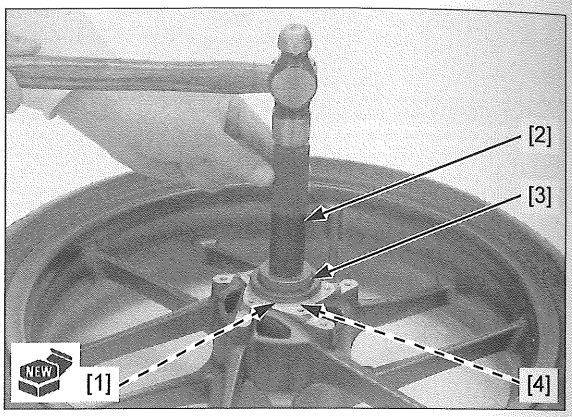

TIRE VALVE REMOVAL/INSTALLATION

Remove the tire.

Remove the nut [1], tire valve [2] and O-ring [3].

Clean the valve installation area of the rim with a degreasing agent.

If a puncture repair product was used, thoroughly clean the inside of the wheel rim.

Do not apply grease to the O-ring.

Install a new O-ring onto the tire valve.

Gradually screw in the tire valve and position it with the valve neck facing the right of the motorcycle and parallel with the axle.

Make sure that the valve seating surface is fully seated on the wheel and tighten the valve nut while holding the tire valve.

TORQUE: 6.5 N·m (0.7 kgf·m, 4.8 lbf·ft)

After the tire valve installation, make sure that the tire valve neck is facing to the right side and parallel to the axle direction.

Install the tire.

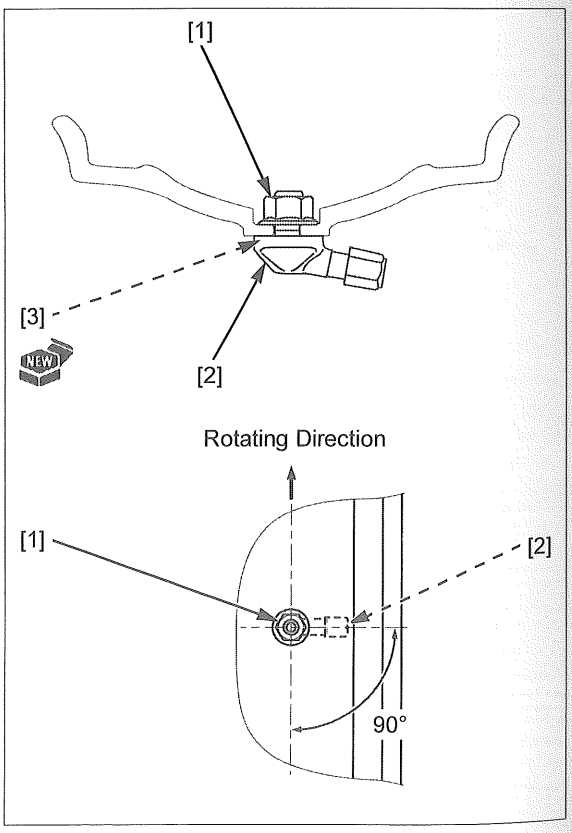

INSTALLATION

Install the side collars [1] to the front wheel.

Apply a thin coat of grease to the front axle sliding surface.

Apply engine oil to the axle threads.

Install the front wheel between the fork legs.

Install the front axle [2] from left side.

Tighten the axle to the specified torque.

TORQUE: 74 N·m (7.5 kgf·m, 55 lbf·ft)

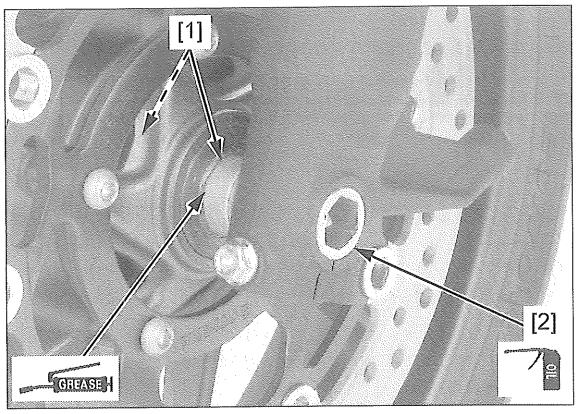

Install the front brake calipers (page 18-16).

With the front brake applied, pump the forks up and down several times to seat the axle and check brake operation.

Tighten the front axle pinch bolt [1] to the specified torque.

TORQUE: 22 N·m (2.2 kgf·m, 16 lbf·ft)

Check the clearance gap between the front wheel speed sensor bracket and pulser ring (page 19-22).

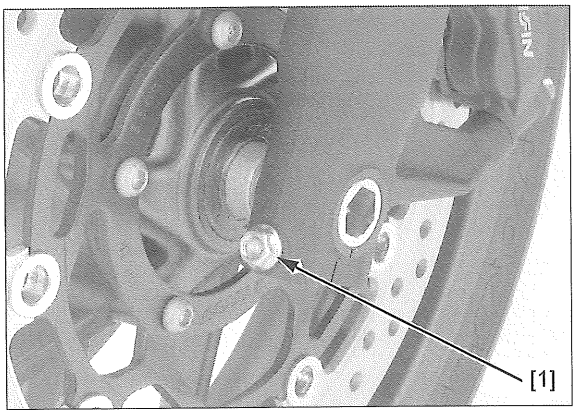

FORK

FORK BOLT

When the forks are ready to be disassembled, loosen the fork bolts but do not remove them yet.

Remove the following:

- Handle rear cover (page 2-9)
- BCU (page 21-23)
- Handlebar nuts [1]
- Washers [2]

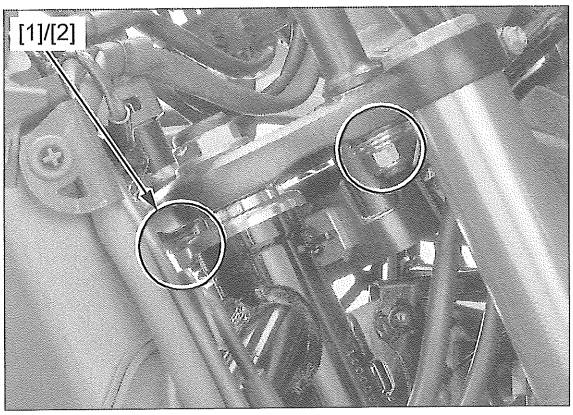

Lift up the handlebar [1].

Loosen the fork bolts [2] using the special tool.

TOOL:
Fork bolt wrench [3] 070MA-MGP0100

Tighten is in the reverse order of loosen.

TORQUE: 34 N·m (3.5 kgf·m, 25 lbf·ft)

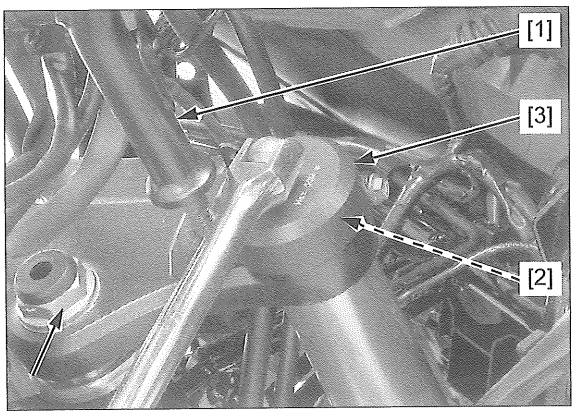

REMOVAL

Remove the following:

- Front side cowl (page 2-15)
- Front wheel (page 16-11)
- Front fender (page 2-6)
- Front wheel speed sensor (from the fork) (page 19-22)

Loosen the top bridge pinch bolts [1].

When the forks are ready to be disassembled, loosen the fork bolts [2] but do not remove them yet (page 16-15).

Hold the fork legs [3] and loosen the bottom bridge pinch bolts [4] and lower the fork legs, then remove it.

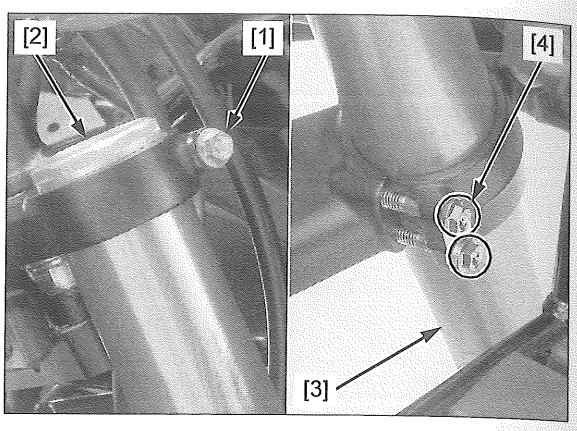

DISASSEMBLY

Right side

Remove the fork bolt [1].

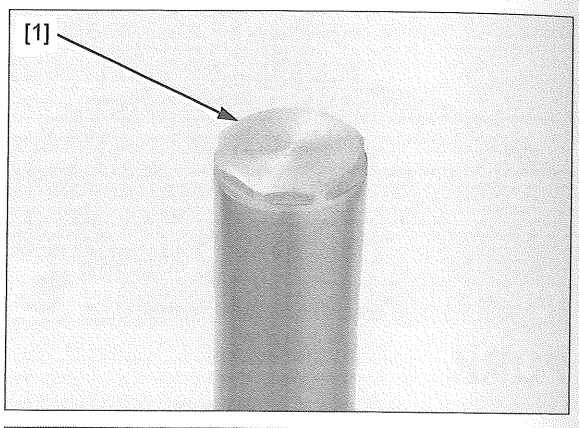

Pour out the fork fluid by pumping the outer pipe [1] several times.

Pour out the fork fluid from the fork damper by pumping the piston assembly [2] several times.

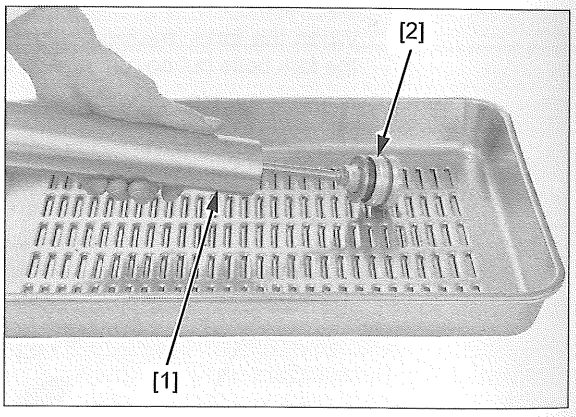

Push the fork bolt [1] down and compress the fork spring, then remove the stopper ring [2] from the groove in the slide pipe.

Remove the piston assembly [3].

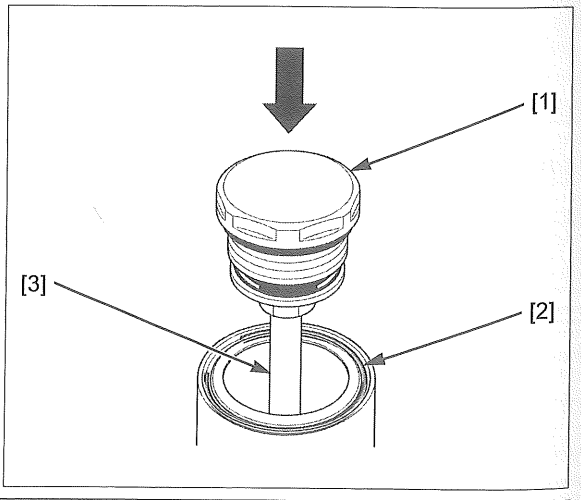

Loosen the lock nut [1] while holding the fork bolt [2] with a wrench, then remove the fork bolt.

Remove the following:

- O-ring [3]
- Stopper seat [4]
- Rod guide case [5]
- O-ring [6]
- Rebound spring [7]
- Piston ring [8]

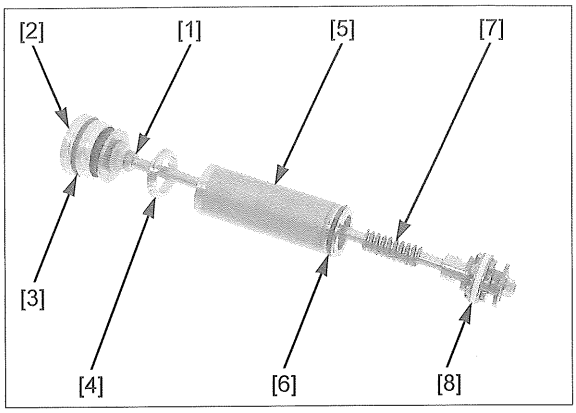

Remove the fork spring [1].

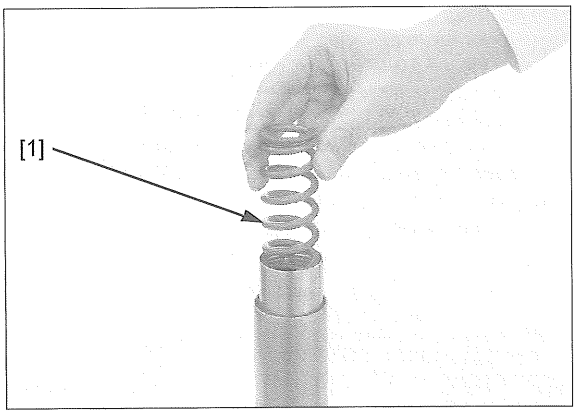

Remove the spring collar [1].

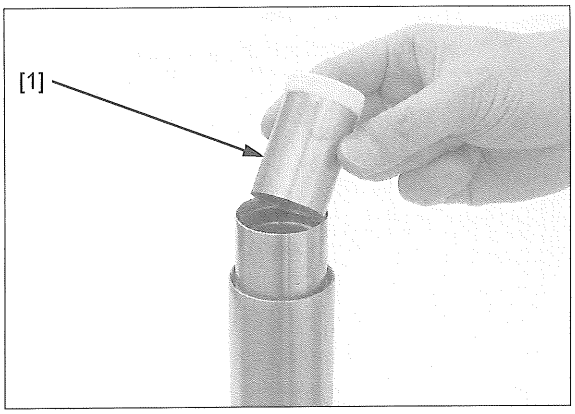

Be careful not to scratch the slide pipe assembly sliding surface.

Remove the dust seal [1] and snap ring [2].

Check that the slide pipe assembly [3] moves smoothly in the outer tube [4].

If the movement is not smooth, check the slide pipe assembly for bend or bushing for wear or damage.

If they are normal, inspect the outer tube.

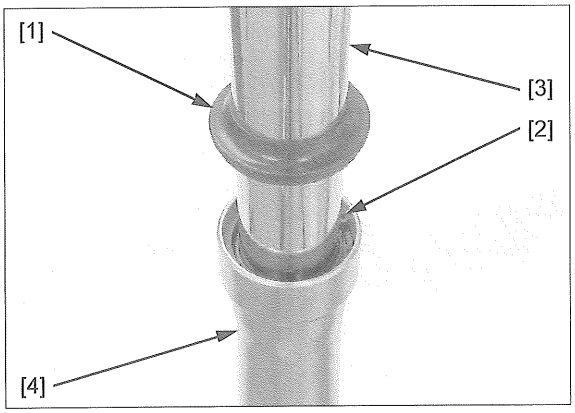

Using quick successive motions, pull the slide pipe assembly [1] out of the outer tube [2].

The guide bushing will be forced out by the slide pipe assembly bushing.

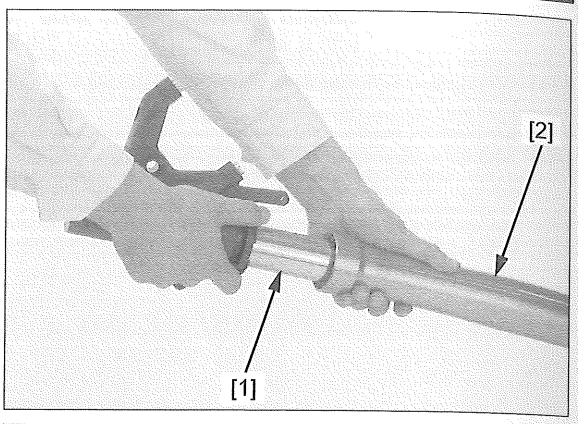

Do not damage the slider bushing, especially the sliding surface. To prevent loss of tension, do not open the slider bushing more than necessary.

Carefully remove the slider bushing [1] by prying the slot with a screwdriver until the slider bushing can be pulled off by hand.

Remove the following:

- Guide bushing [2]
- Back-up ring [3]
- Oil seal [4]
- Snap ring [5]
- Dust seal [6]

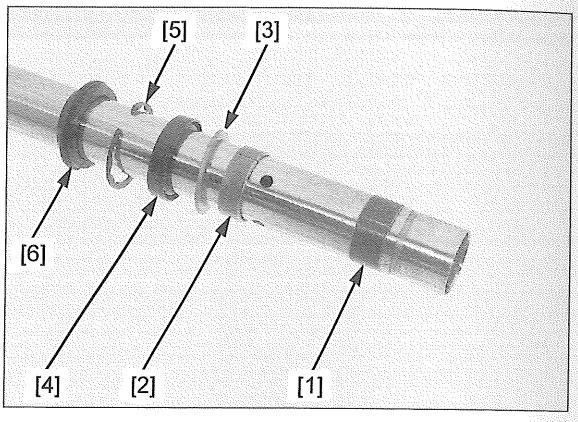

Left side

Remove the fork bolt [1].

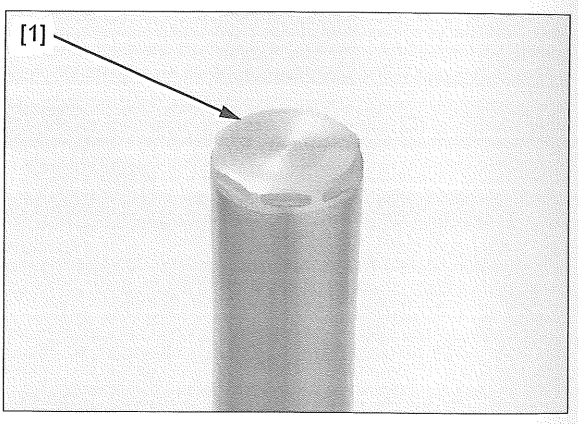

Pour out the fork fluid by pumping the outer pipe [1] several times.

Pour out the fork fluid from the fork damper by pumping the damper rod [2] several times.

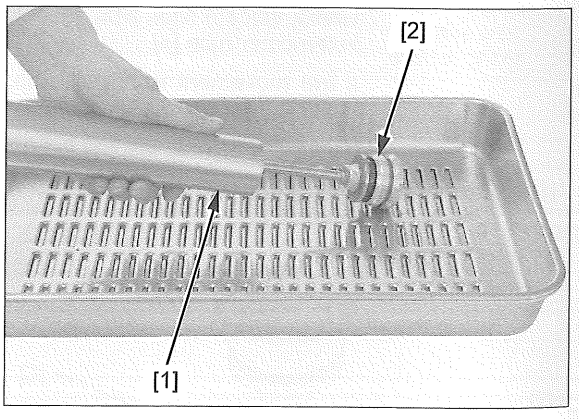

Push the fork bolt [1] down and compress the fork spring, then remove the stopper ring [2] from the groove in the slide pipe.

Remove the rod Comp. [3].

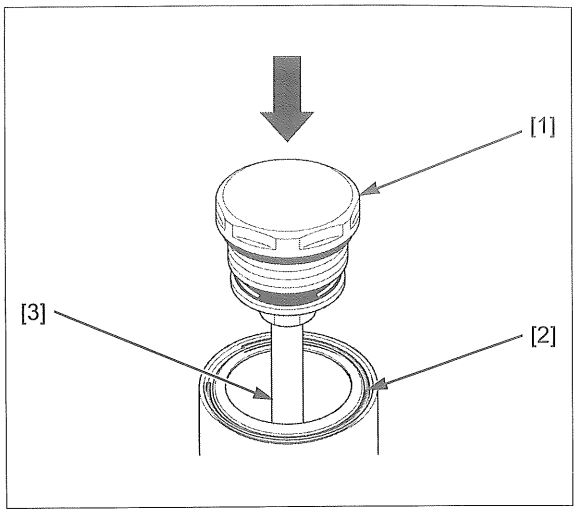

Loosen the lock nut [1] while holding the fork bolt [2] with a wrench, then remove the fork bolt.

Remove the O-ring [3] from the fork bolt groove.

Remove the stopper seat [4] and rebound spring [5].

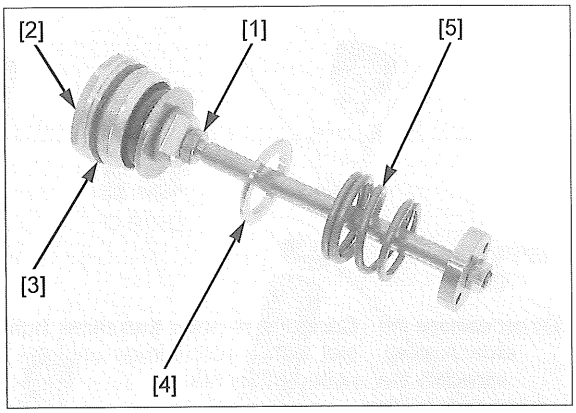

Remove the fork spring [1].

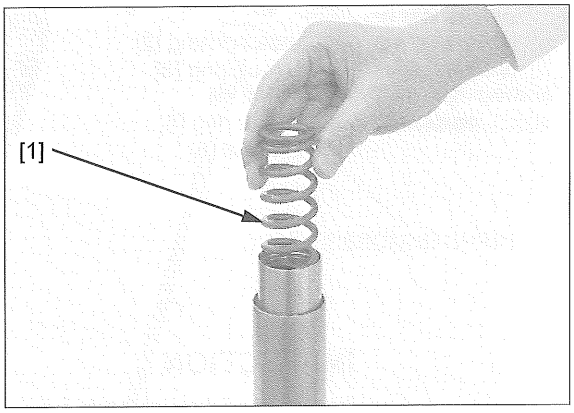

Remove the spring collar [1].

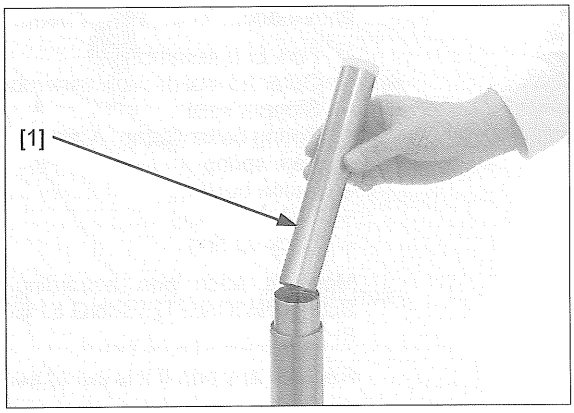

Be careful not to scratch the slide pipe assembly sliding surface.

Remove the dust seal [1] and stopper ring [2].

Check that the slide pipe assembly [3] moves smoothly in the outer tube [4].

If the movement is not smooth, check the slide pipe assembly for bend or bushing for wear or damage.

If they are normal, inspect the outer tube.

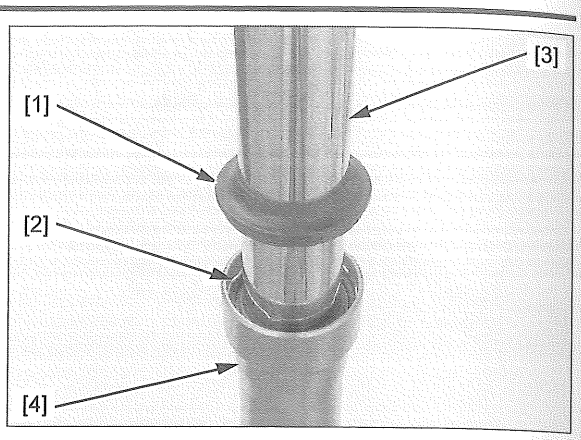

Using quick successive motions, pull the slide pipe assembly [1] out of the outer tube [2].

The guide bushing will be forced out by the slide pipe assembly bushing.

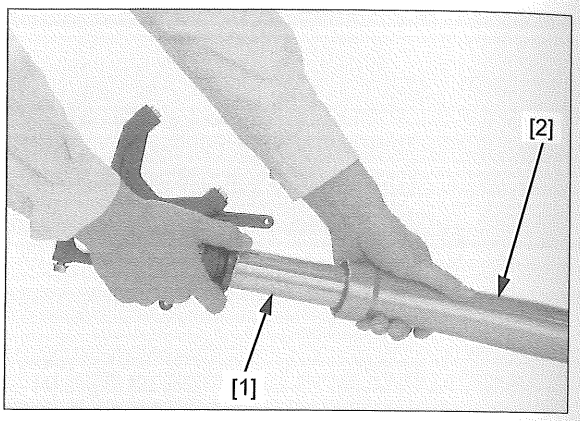

Do not damage the slider bushing, especially the sliding surface. To prevent loss of tension, do not open the slider bushing more than necessary.

Carefully remove the slider bushing [1] by prying the slot with a screwdriver until the slider bushing can be pulled off by hand.

Remove the following:

- Guide bushing [2]
- Back-up ring [3]
- Oil seal [4]
- Stopper ring [5]
- Dust seal [6]

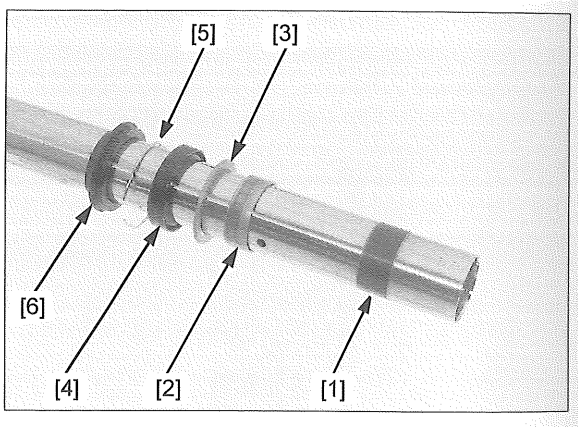

INSPECTION

Inspect the following parts for damage, abnormal wear, deformation, looseness or bend.

- Fork bolt assembly
- Outer tube/slide pipe assembly
- Stopper seat
- Spring collar Comp. A and B
- Fork spring
- Guide bushing
- Slider bushing
- Back-up ring

Measure each part according to FRONT WHEEL/ SUSPENSION/STEERING SPECIFICATIONS (page 1-8).

Replace any part if it is out of service limit.

ASSEMBLY

Right side

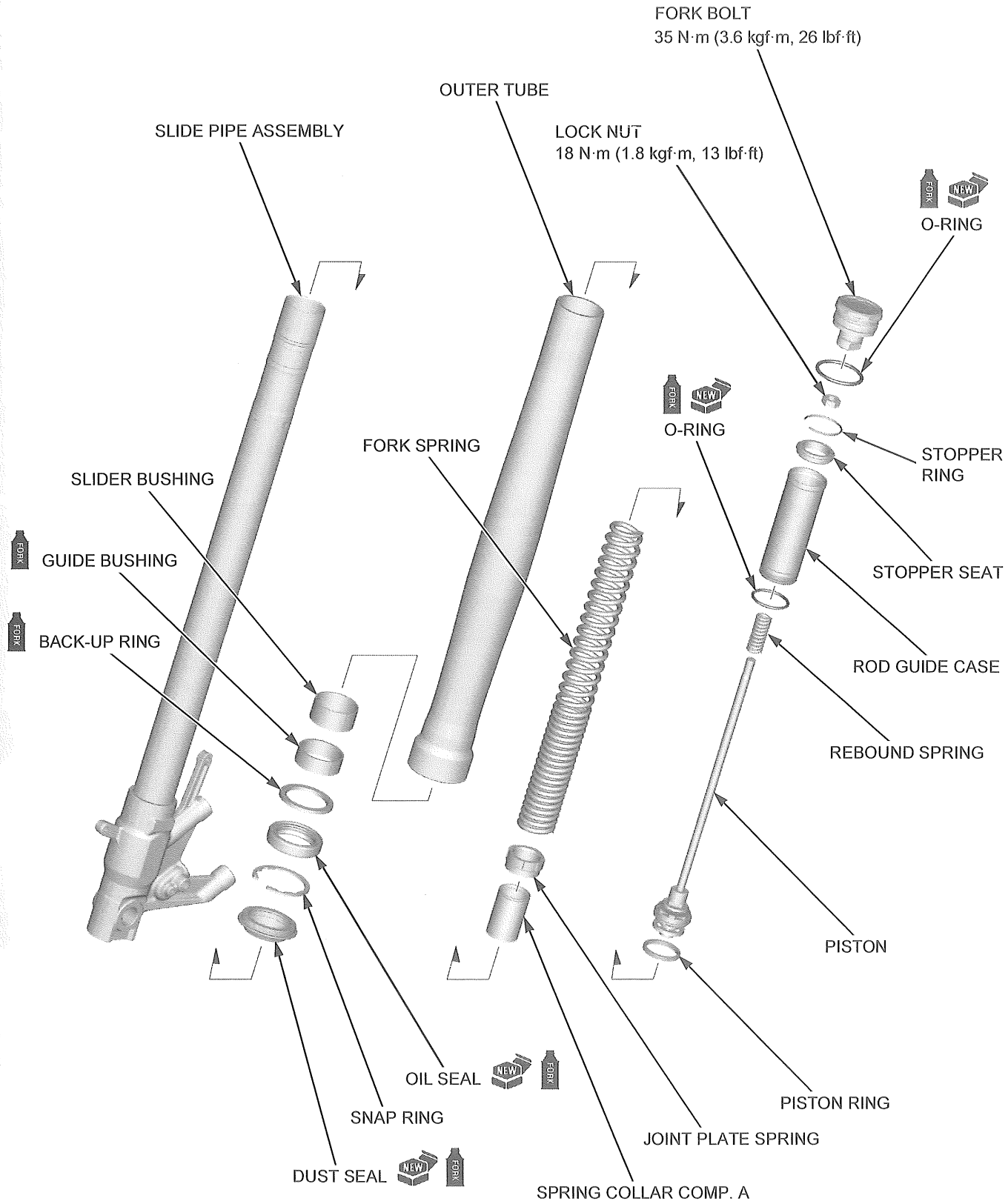

Before assembly, wash all parts with a high flash point or non-flammable solvent and wipe them off completely.

Wrap the end of the slide pipe assembly and slide pipe hole with tape [1].

Coat new fork oil seal [2] and dust seal [3] lips with recommended fork oil.

Install the dust seal and snap ring [4] onto the slide pipe assembly.

Install the oil seal onto the slide pipe assembly with its marked side facing the dust seal.

Remove the tape from the end of the slide pipe assembly.

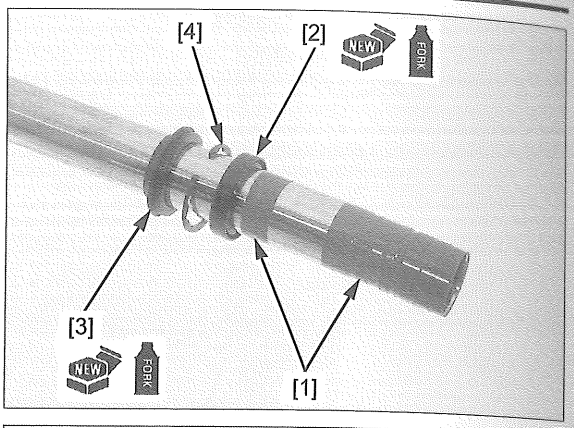

Install the back-up ring [1], guide bushing [2], and slider bushing [3].

NOTE:

- Be careful not to damage the slider bushing coating. Do not open the slider bushing more than necessary.
- Remove the burrs from the bushing mating surface, being careful not to peel off the coating.

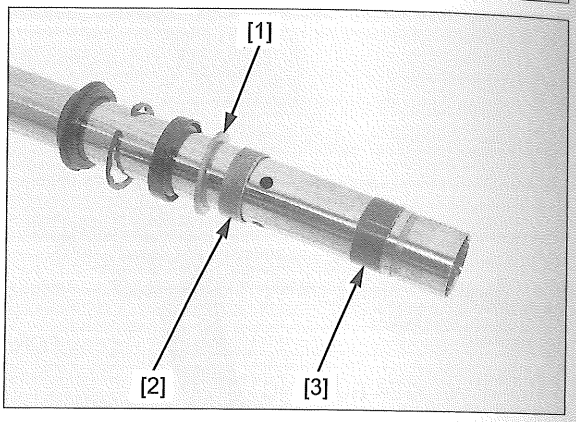

Coat the guide bushing and slider bushing with recommended fork oil, and install the slide pipe assembly [1] into the outer tube [2].

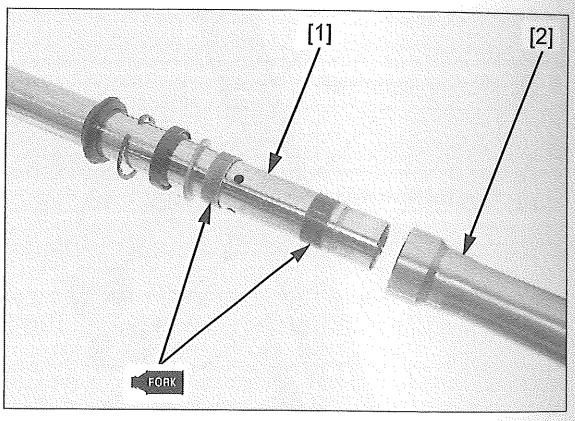

Drive in the oil seal [1] into the outer tube using the special tool.

TOOL:

Fork seal driver, 45.2 mm [2]	**07KMD-KZ30100**
Fork seal driver attachment, 41.3 mm [3]	**07RMD-MW40100**

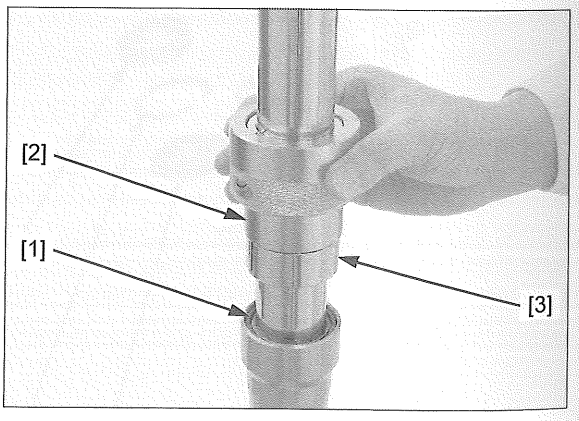

Install the snap ring [1] into the groove in the outer tube [2], being careful not to scratch the slide pipe assembly [3].

Install the dust seal [4] into the outer tube.

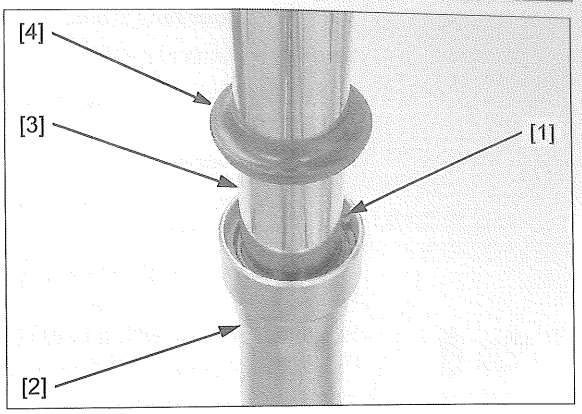

Pour the specified amount of recommended fork fluid.

RECOMMENDED FORK FLUID:
Fork fluid (10W)
FORK FLUID CAPACITY:
550 cm³ (18.6 US oz, 19.4 Imp oz)

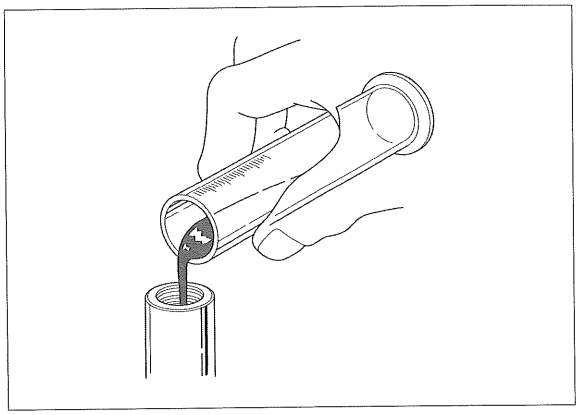

Install the spring collar comp. A [1].

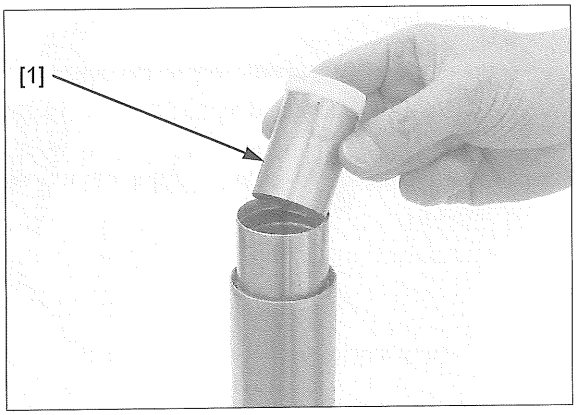

Install the fork spring [1].

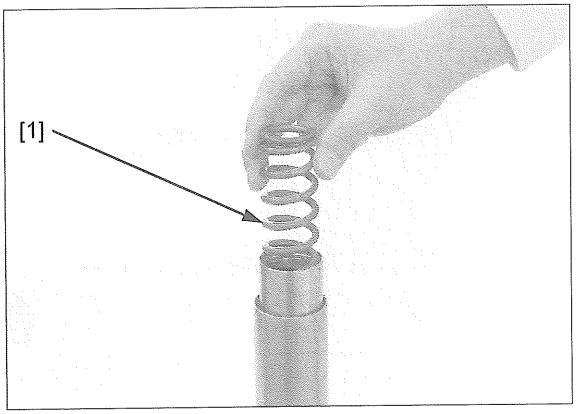

Loosen the lock nut [1] until it stops.

Install the piston ring [2] to the piston [3].

Install the rebound spring [4] and rod guide case [5] to the piston.

Install the stopper seat [6] in the shown direction.

Apply recommended fork oil to new O-rings [7] and install them as shown.

Install the fork bolt [8] to the piston and tighten it until it stops.

Hold the fork bolt with a wrench, then tighten the lock nut to the specified torque.

TORQUE: 18 N·m (1.8 kgf·m, 13 lbf·ft)

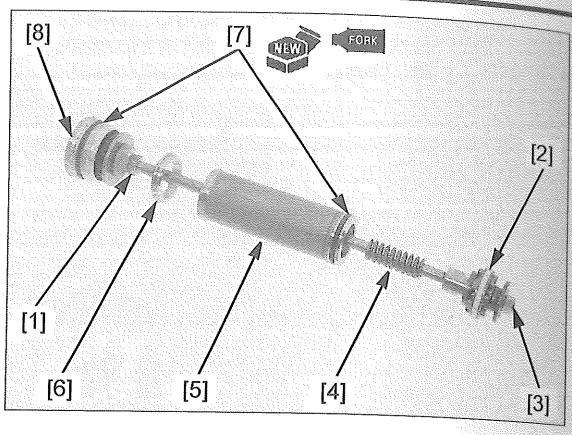

Push the fork bolt [1] down and compress the fork spring, then install the stopper ring [2] into the groove in the slide pipe assembly.

Measure the fork fluid level from the top of the outer tube.

FORK FLUID LEVEL: 71 mm (2.8 in)

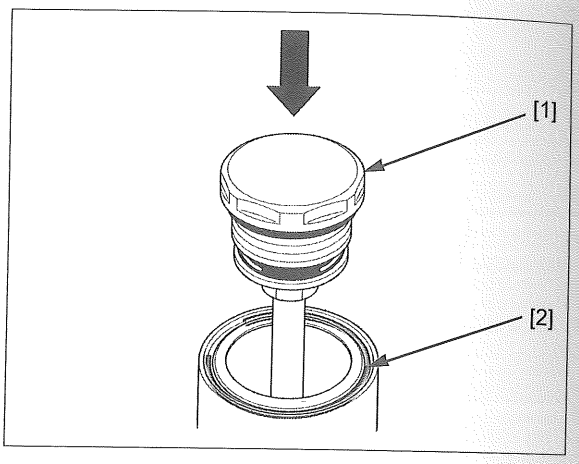

Completely extend the outer tube [1].

Install and tighten the fork bolt [2] into the outer tube.

Tighten the fork bolt to the specified torque after installing the fork leg into the steering stem (page 16-15).

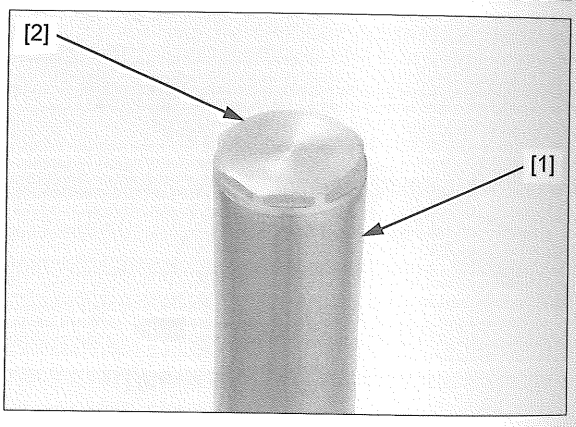

Left side

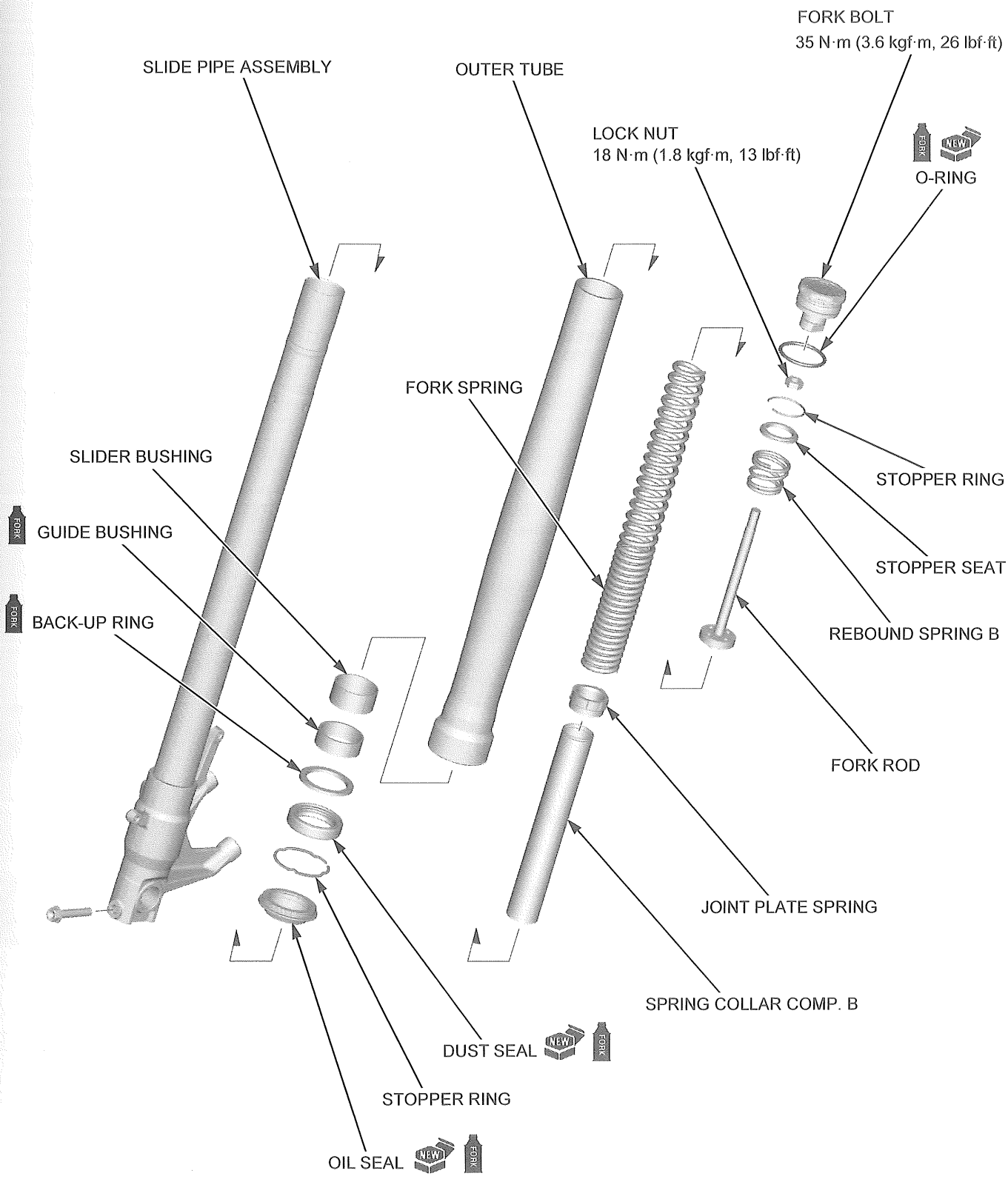
FORK BOLT
35 N·m (3.6 kgf·m, 26 lbf·ft)
SLIDE PIPE ASSEMBLY
OUTER TUBE
LOCK NUT
18 N·m (1.8 kgf·m, 13 lbf·ft)
NEW
FORK
O-RING
FORK SPRING
SLIDER BUSHING
STOPPER RING
FORK
GUIDE BUSHING
STOPPER SEAT
FORK
BACK-UP RING
REBOUND SPRING B
FORK ROD
JOINT PLATE SPRING
SPRING COLLAR COMP. B
NEW
FORK
DUST SEAL
STOPPER RING
NEW
FORK
OIL SEAL

Before assembly, wash all parts with a high flash point or non-flammable solvent and wipe them off completely.

Wrap the end of the slide pipe assembly and slide pipe hole with tape [1].

Coat new fork oil seal [2] and dust seal [3] lips with recommended fork oil.

Install the dust seal and stopper ring [4] onto the slide pipe assembly.

Install the oil seal onto the slide pipe assembly with its marked side facing the dust seal.

Remove the tape from the end of the slide pipe assembly.

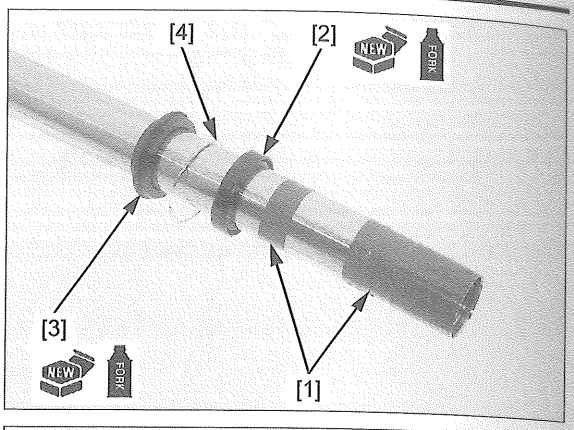

Install the back-up ring [1], guide bushing [2], and slider bushing [3].

NOTE:

- Be careful not to damage the slider bushing coating. Do not open the slider bushing more than necessary.
- Remove the burrs from the bushing mating surface, being careful not to peel off the coating.

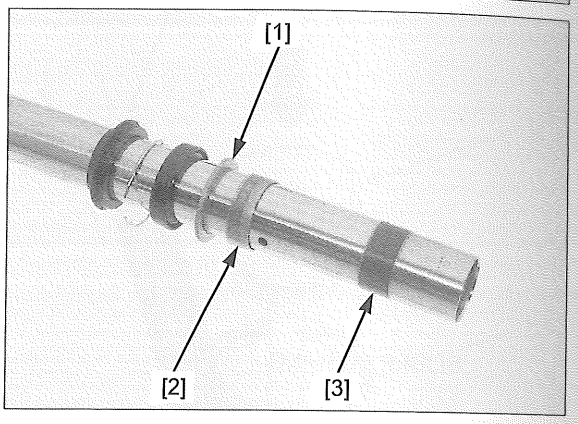

Coat the guide bushing and slider bushing with recommended fork oil, and install the slide pipe assembly [1] into the outer tube [2].

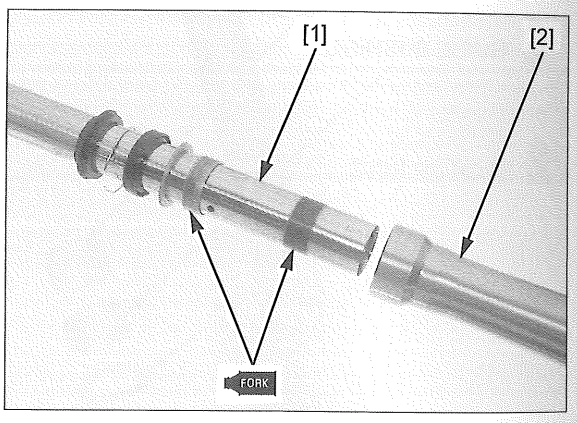

Drive in the oil seal [1] into the outer tube using the special tool.

TOOL:

Fork seal driver, 45.2 mm [2]	**07KMD-KZ30100**
Fork seal driver attachment, 41.3 mm [3]	**07RMD-MW40100**

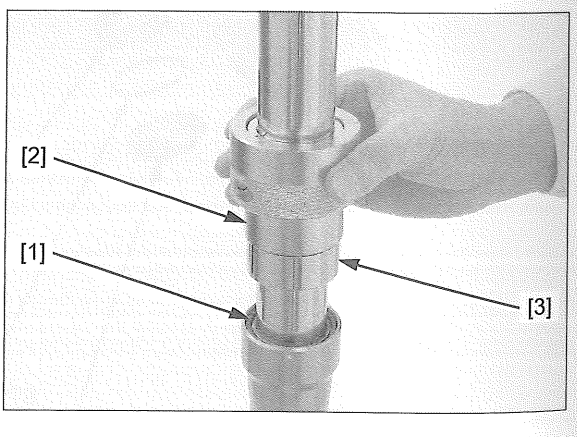

Install the stopper ring [1] into the groove in the outer tube [2], being careful not to scratch the slide pipe assembly [3].

Install the dust seal [4] into the outer tube.

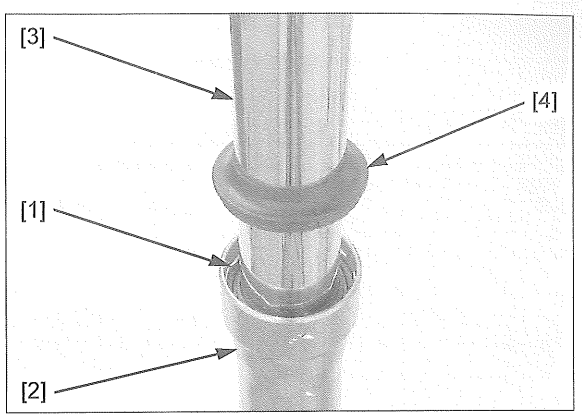

Pour the specified amount of recommended fork fluid.

RECOMMENDED FORK FLUID:
Fork fluid (10W)
FORK FLUID CAPACITY:
568 cm³ (19.2 US oz, 20.0 Imp oz)

FORK FLUID LEVEL: 155 mm (6.1 in)

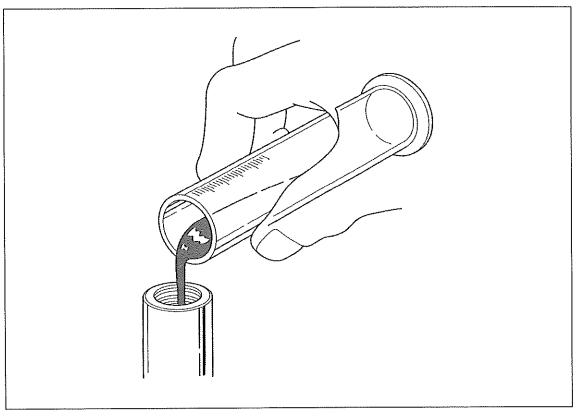

Install the spring collar [1].

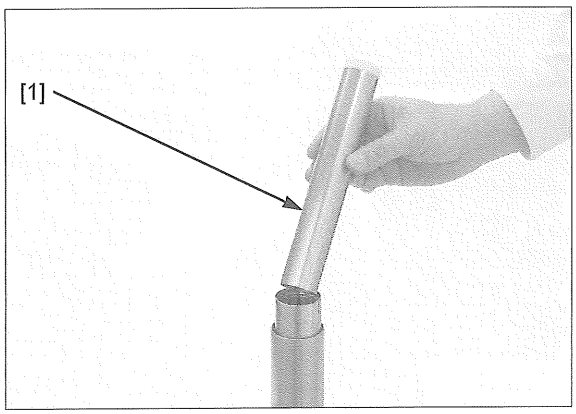

Install the fork spring [1].

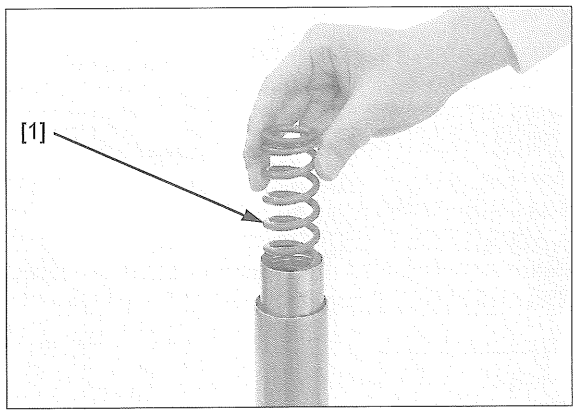

Loosen the lock nut [1] until it stops.

Install the rebound spring [2] to the rod Comp.

Install the stopper seat [3] in the shown direction.

Apply recommended fork oil to a new O-ring [4], and install it to the fork bolt [5].

Install the fork bolt to the rod Comp. and tighten it until it stops.

Hold the fork bolt with a wrench, then tighten the lock nut to the specified torque.

TORQUE: 18 N·m (1.8 kgf·m, 13 lbf·ft)

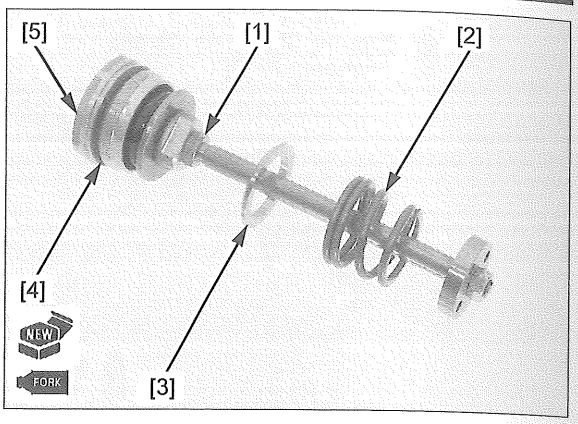

Push the fork bolt [1] down and compress the fork spring, then install the stopper ring [2] into the groove in the slide pipe assembly.

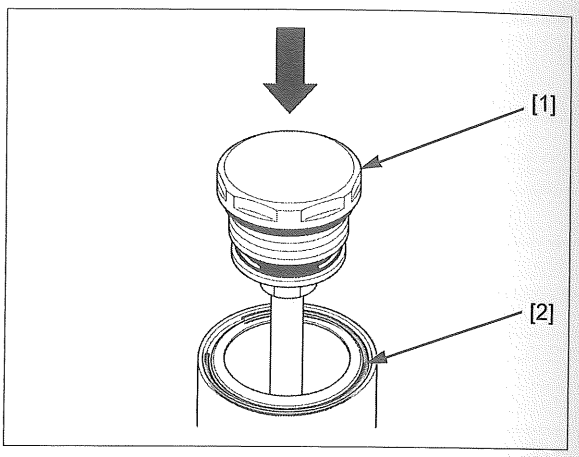

Completely extend the outer tube [1].

Install and tighten the fork bolt [2] into the outer tube.

Tighten the fork bolt to the specified torque after installing the fork leg into the steering stem (page 16-15).

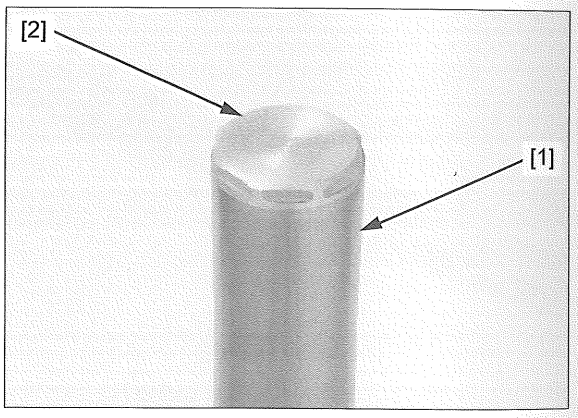

INSTALLATION

Install the fork leg [1] through the bottom bridge, top bridge.

Tighten the bottom bridge pinch bolts [2] to the specified torque.

TORQUE: 27 N·m (2.8 kgf·m, 20 lbf·ft)

Tighten the top bridge pinch bolt [3] to the specified torque.

TORQUE: 22 N·m (2.2 kgf·m, 16 lbf·ft)

Install the following:

- Front fender (page 2-6)
- Front wheel (page 16-11)
- Front side cowl (page 2-15)
- Front wheel speed sensor (to the fork) (page 19-22)

If the fork bolt [4] is loosened, tighten the fork bolt to the specified torque (page 16-15).

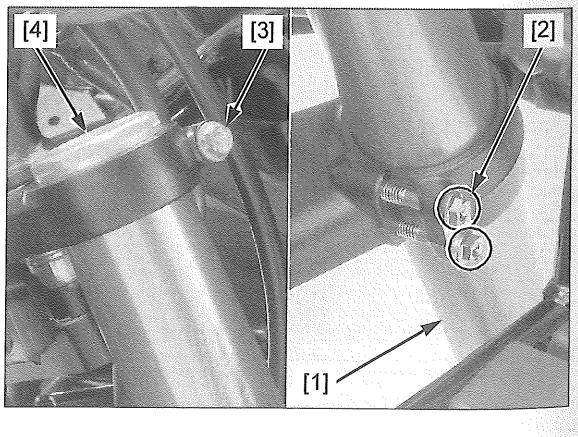

STEERING STEM

REMOVAL

Remove the following:

- Handlebar (page 16-4)
- Front wheel (page 16-11)
- Front fender (page 2-6)
- Fork (page 16-15)

Release the following:

- Wire clips [1]
- Fuel lid/seat open switch 4P (Black) connector [2]
- Ignition switch 4P (Black) connector [3]

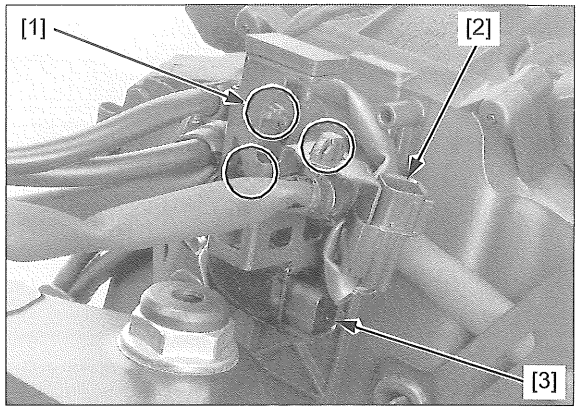

Remove the screws/washers [1] and bracket [2].

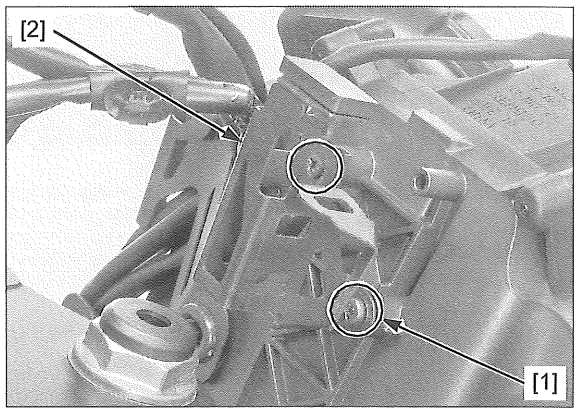

Remove the bolt [1] and hose clamp [2] from the steering stem [3].

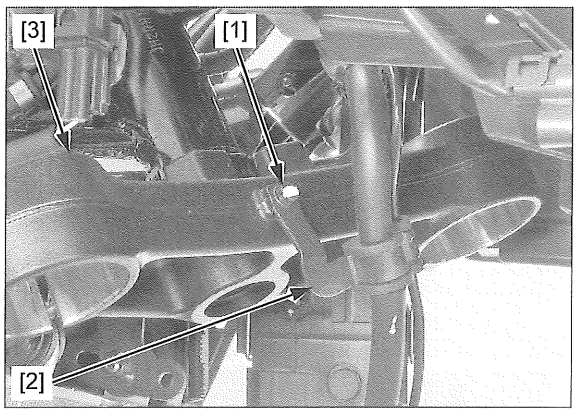

Disconnect the ESL 6P (Black) connector [1].

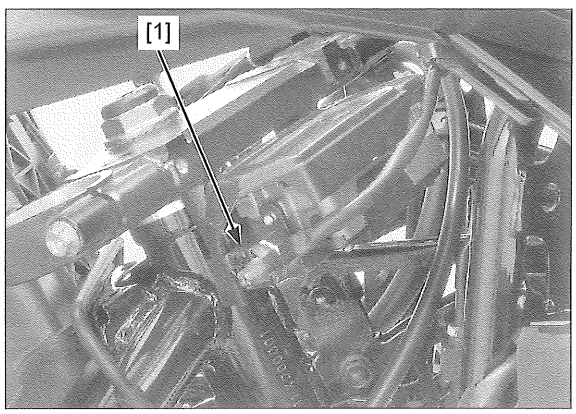

Remove the following:

- Steering stem nut cap [1]
- Steering stem nut [2]
- Top bridge [3]

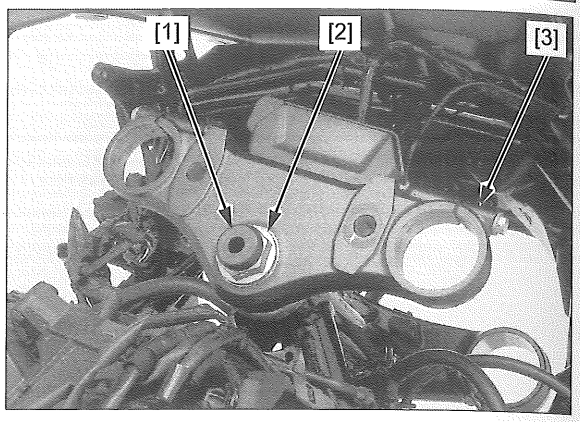

Straighten the lock washer tabs [1].

Remove the steering stem adjusting lock nut [2] and lock washer.

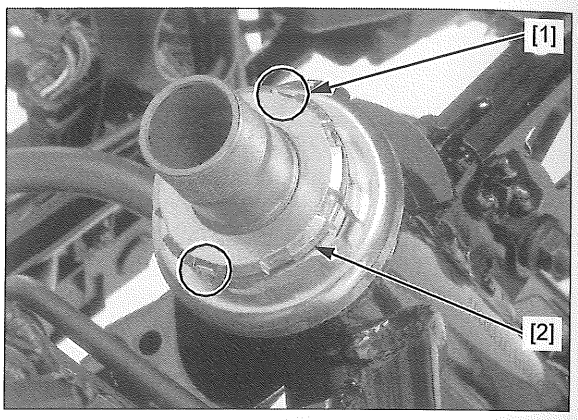

Loosen the steering stem adjusting nut [1] using a special tool.

TOOL:
Steering stem socket [2] **07916-3710101**

Hold the steering stem and remove the steering stem adjusting nut.

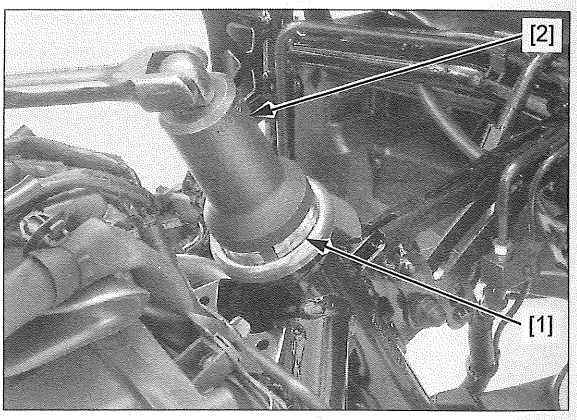

Remove the following:

- Upper dust seal [1]
- Upper bearing inner race [2]
- Upper steering head bearing [3]
- Steering stem [4]
- Lower steering head bearing [5]

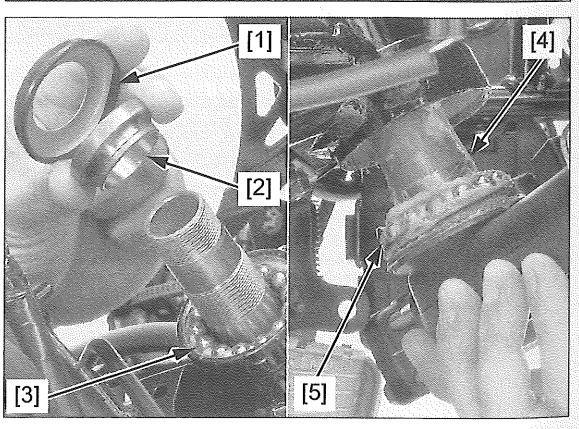

BEARING REPLACEMENT

Replace the bearing outer and inner races as a set.

Remove the upper outer race using a special tool.

TOOLS:

Ball race remover set	**07953-MJ10000**
Remover attachment [1]	**07953-MJ10100**
Remover handle [2]	**07953-MJ10200**

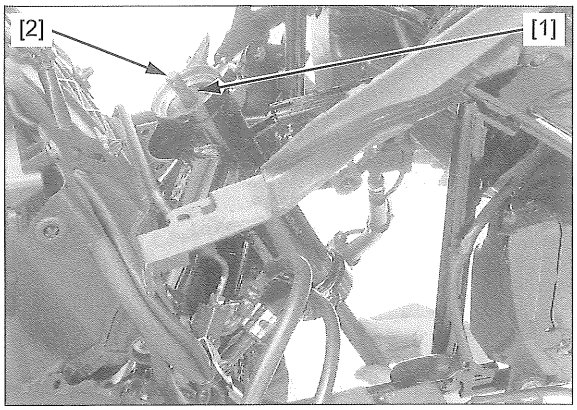

Remove the lower bearing outer race using the special tool and suitable shaft.

TOOL:

Bearing remover [1]	**07946-3710500**

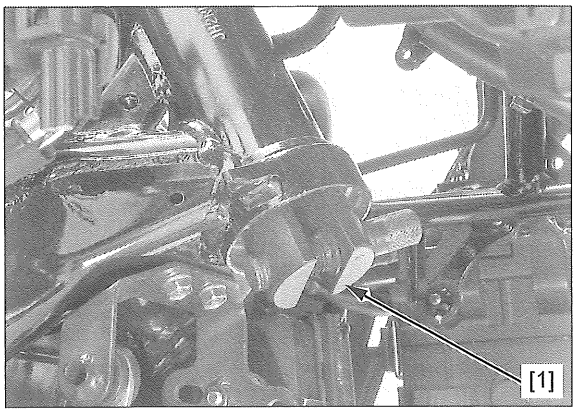

Temporarily install the steering stem nut [1] onto the steering stem [2] to prevent the threads from being damaged when removing the lower inner race [3] from the steering stem.

Remove the lower inner race with a chisel or equivalent tools, being careful not to damage the steering stem.

Remove the lower dust seal [4].

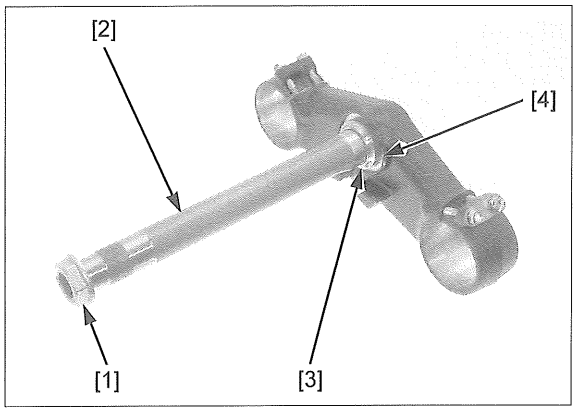

Apply specified grease to a new steering head bearing dust seal lips (page 1-16).

Install the lower dust seal [1] to the steering stem.

Install a new lower inner race [2] using a hydraulic press and special tool.

TOOL:

Attachment, 32 x 35 mm [3]	**07746-0010100**
Attachment, 30 mm I.D. [4]	**07746-0030300**

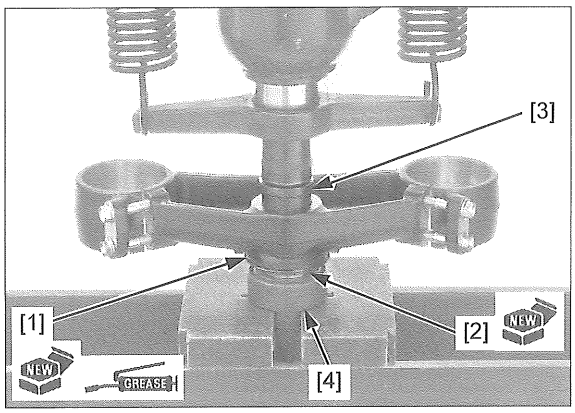

Drive in a new upper outer race [1] using the special tools.

TOOLS:

Driver [2]	**07749-0010000**
Attachment, 42 x 47 mm [3]	**07746-0010300**

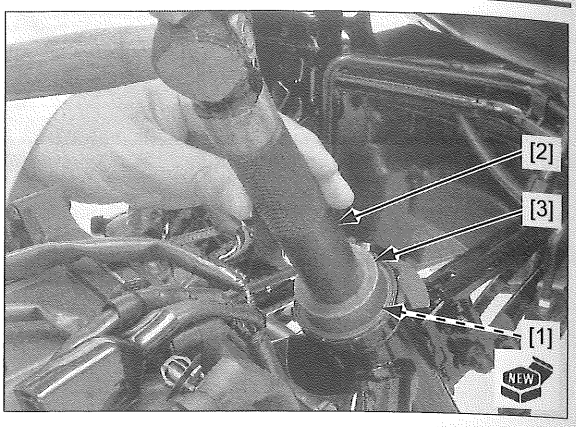

Drive in a new lower outer race [1] using the special tools.

TOOLS:

Driver [2]	**07749-0010000**
Attachment, 52 x 55 mm [3]	**07746-0010400**

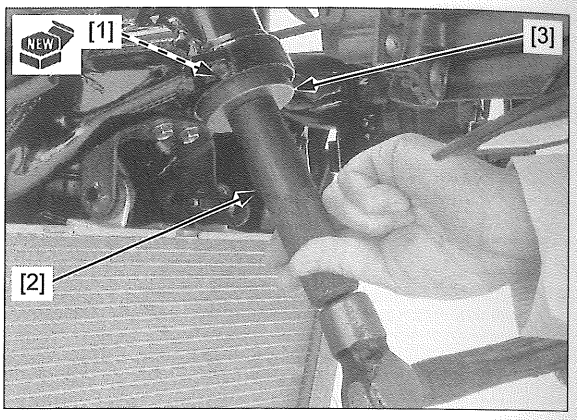

INSTALLATION

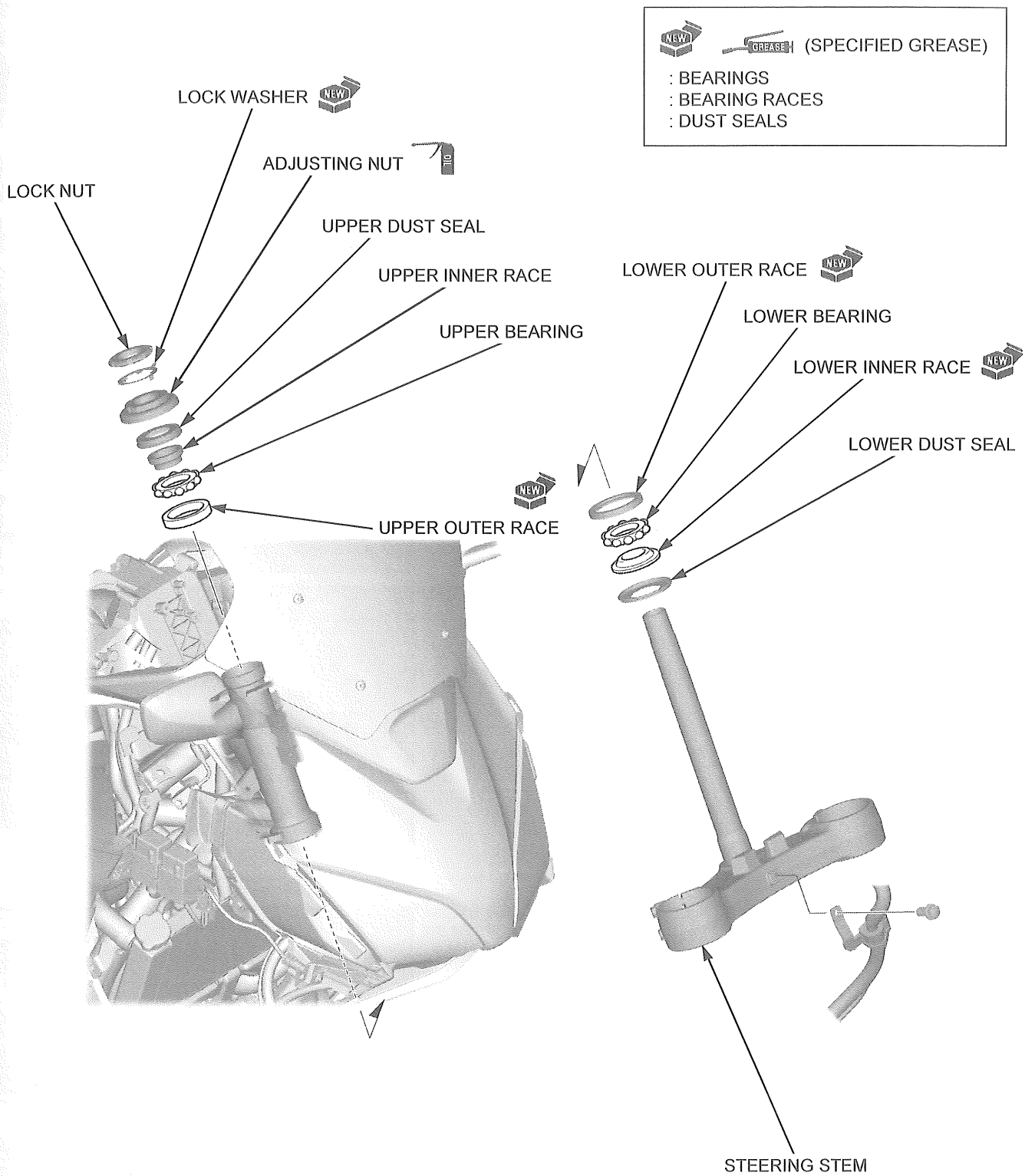

Apply 3 – 5 g (0.1 – 0.2 oz) of specified grease to the upper bearing [1] and lower bearing [2] (page 1-16).

Apply specified grease to a new upper dust seal [3] lips (page 1-16).

Install the lower bearing and upper bearing.

Install the steering stem [4], upper inner race [5], and dust seal.

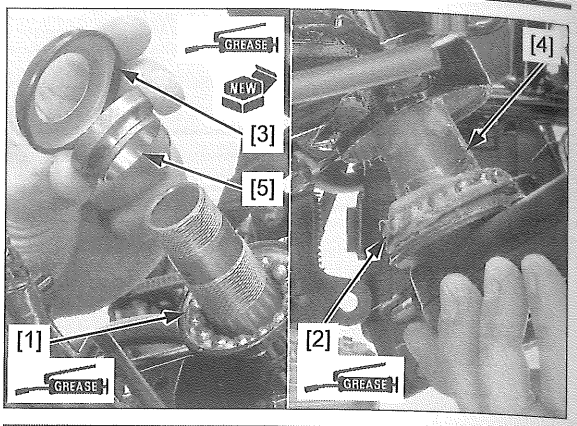

Apply engine oil to the steering stem adjusting nut [1] threads.

Install and tighten the steering stem adjusting nut to the specified torque using a special tool.

TOOL:
Steering stem socket [2] 07916-3710101

TORQUE: 23 N·m (2.3 kgf·m, 17 lbf·ft)

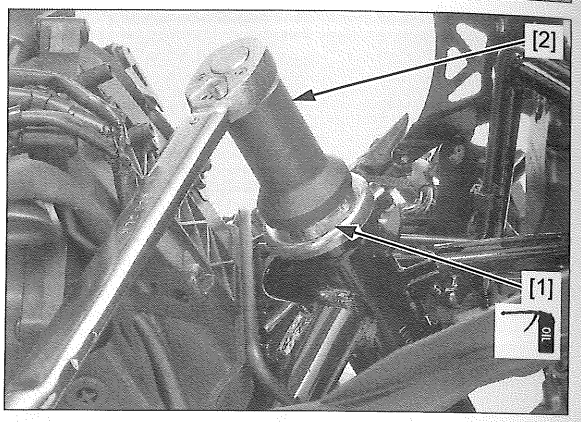

Move the steering stem left and right, lock-to-lock five times to seat the bearings.

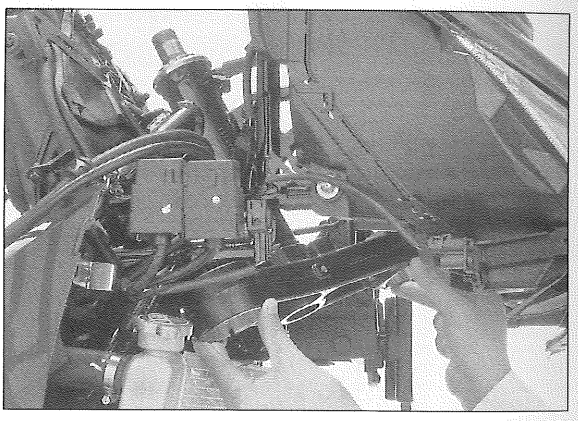

Retighten the adjusting nut [1] to the specified torque using a special tool.

TOOL:
Steering stem socket [2] 07916-3710101

TORQUE: 23 N·m (2.3 kgf·m, 17 lbf·ft)

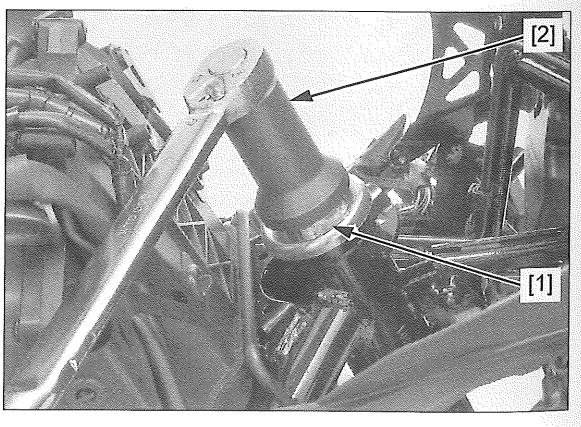

Install a new lock washer [1], aligning its short bent tabs with the grooves of the steering stem adjusting nut.

Install the lock nut [2] until it contacts with the lock washer.

Further tighten the lock nut, within 90°, to align its grooves with the tabs of the lock washer.

Bend up the long lock washer tabs [3] into the grooves of the lock nut.

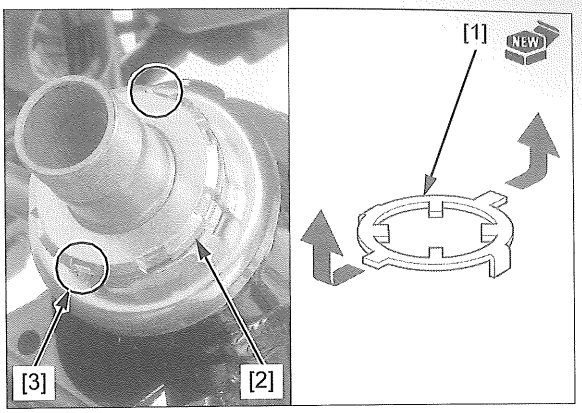

Route the hoses, cables, and wires properly (page 1-20).

Install the top bridge [1].

Install the steering stem nut [2], but do not tighten it yet.

Install the fork legs (page 16-28).

Tighten the steering stem nut to the specified torque.

TORQUE: 103 N·m (10.5 kgf·m, 76 lbf·ft)

Turn the steering stem left and right, lock-to-lock several times to make sure the steering stem moves smoothly without play or binding.

Install the cap [3] to the steering stem nut.

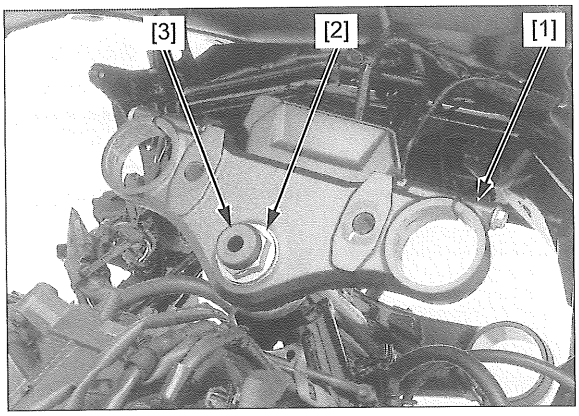

Connect the ESL 6P (Black) connector [1].

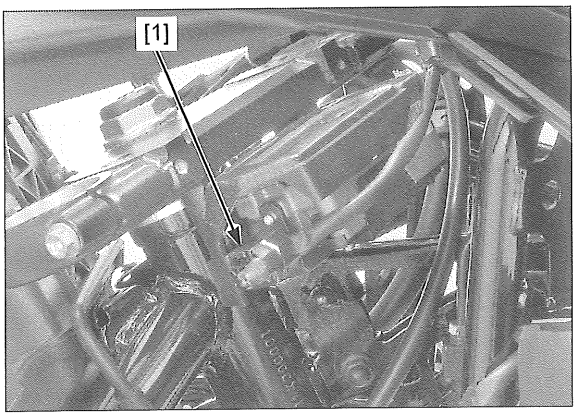

Clamp the brake hose grommet [1] with the hose clamp [2] and install them and bolt [3] to the steering stem [4].

Tighten the bolt securely.

NOTE:

- Make sure the grommet is in position as shown.

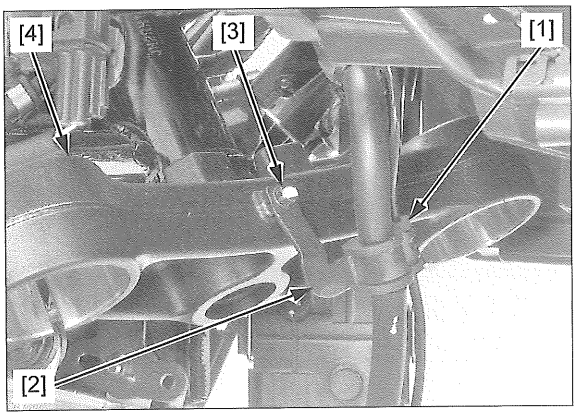

Install the bracket [1] and screws/washers [2].

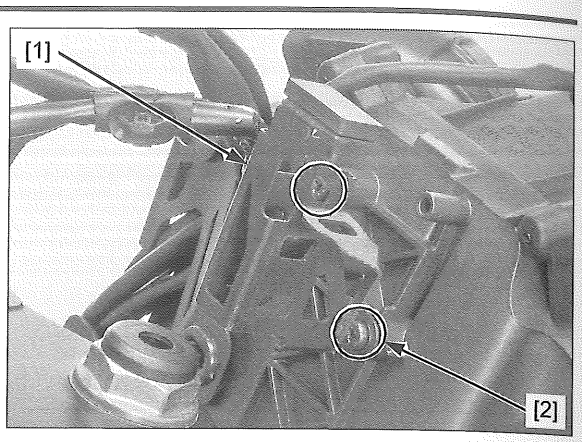

Install the following:

- Wire clips [1]
- Fuel lid/seat open switch 4P (Black) connector [2]
- Ignition switch 4P (Black) connector [3]
- Handlebar (page 16-4)
- Front fender (page 2-6)
- Front wheel (page 16-11)

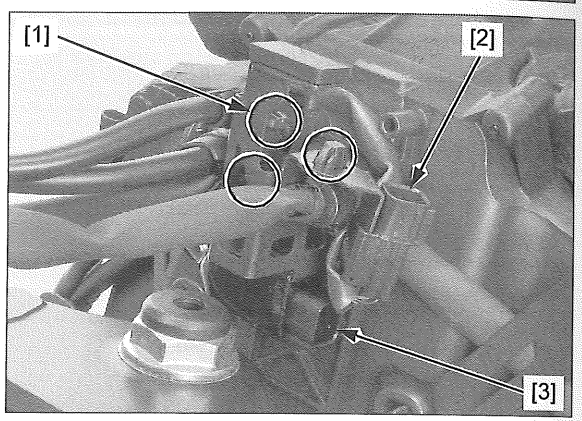

17. REAR WHEEL/SUSPENSION

SERVICE INFORMATION 17-2

TROUBLESHOOTING 17-2

COMPONENT LOCATION 17-3

REAR WHEEL 17-4

SHOCK LINKAGE 17-8

SHOCK ABSORBER 17-10

SWINGARM 17-11

SERVICE INFORMATION

GENERAL

- When servicing the rear wheel and suspension, support the motorcycle securely on its centerstand.
- A contaminated brake disc or pad reduces stopping power. Discard contaminated pads and clean a contaminated disc with a high quality brake degreasing agent.
- After the rear wheel installation, check the brake operation by applying the brake lever.
- Use only tires marked "TUBELESS" and tubeless valves on rim marked "TUBELESS TIRE APPLICABLE".
- Use Honda Genuine replacement bolts and nuts for all suspension pivot and mounting point.
- For brake system information (page 18-2)
- For wheel balance inspection (page 16-12)
- For driven sprocket inspection (page 3-16)

TROUBLESHOOTING

Steers to one side or does not track straight
- Drive chain adjusters not adjusted equally
- Bent axle
- Bent frame
- Worn swingarm pivot components

Rear wheel wobbling
- Bent rim
- Unbalanced tire and wheel
- Faulty tire
- Worn wheel bearings
- Worn driven flange bearings
- Insufficient tire pressure
- Damaged suspension or swingarm pivot bearings
- Axle not tightened properly
- Bent frame or swingarm

Wheel hard to turn
- Faulty wheel bearings
- Faulty driven flange bearings
- Bent axle
- Brake drag (page 18-2)
- Drive chain too tight (page 3-14)

Soft suspension
- Weak shock absorber spring
- Improper shock absorber spring preload
- Oil leakage from damper unit
- Insufficient tire pressure

Stiff suspension
- Improper shock absorber spring preload
- Bent shock absorber damper rod
- Damaged bushings
- Damaged rear suspension or swingarm pivot bearings
- Bent swingarm pivot or frame
- Tire pressure too high
- Faulty suspension linkage

Rear suspension noisy
- Loose suspension fasteners
- Worn rear suspension pivot bearings
- Worn shock absorber mount bushings
- Faulty shock absorber

COMPONENT LOCATION

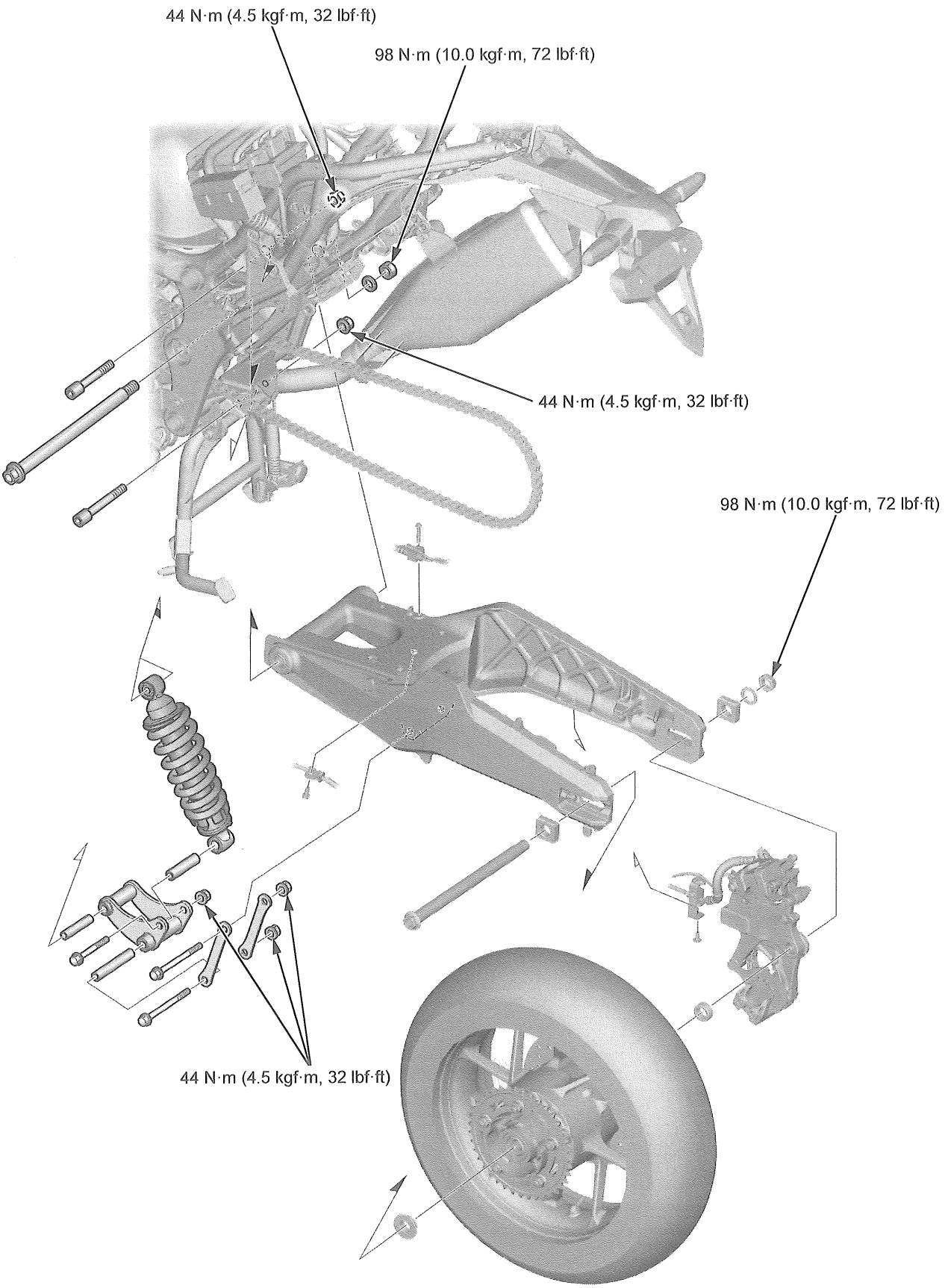

REAR WHEEL

REMOVAL

Remove the drive chain case (page 2-31).

Remove the parking brake caliper (page 18-9).

Fully slacken the drive chain (page 3-15).

Push the rear wheel forward.

Derail the drive chain [1] from the driven sprocket.

Remove the axle nut [2], washer [3], and right adjusting plate [4].

Remove the axle [5], left adjusting plate [6], rear wheel, and side collars [7].

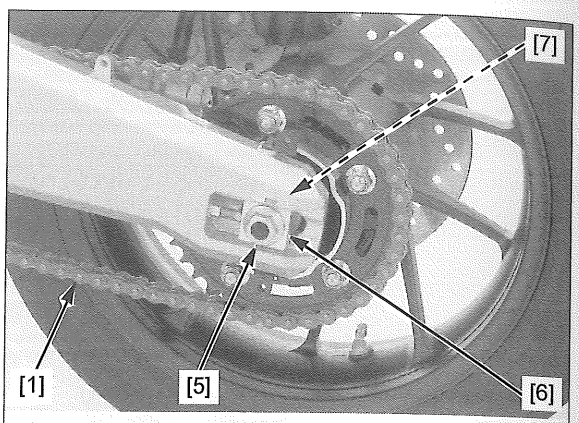

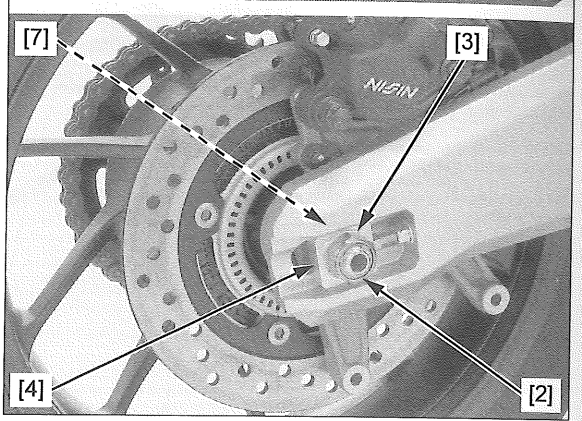

NOTE:

- Do not suspend the brake caliper/bracket assembly from the brake hose. Do not twist the brake hose.
- Do not operate the brake lever after removing the rear wheel.
- Do not operate the parking brake lever after removing the rear wheel.

INSPECTION

Turn the inner race of each bearing with your finger.

The bearings should turn smoothly and quietly.

Inspect the following parts for damage, abnormal wear, deformation or bends.

– Rear axle
– Rear wheel

Measure each part according to REAR WHEEL/ SUSPENSION SPECIFICATIONS (page 1-8).

Replace any part if it is out of service limit.

Refer to the wheel balance service (page 16-12).

DISASSEMBLY/ASSEMBLY

NOTE:

- For wheel balance service (page 16-12)
- Install the rear wheel dust seal until it is flush with the wheel hub surface.
- Install the driven sprocket and rear brake disc with the "⇨" marked side facing out.
- Replace the wheel bearings in pairs. Do not reuse old bearings.

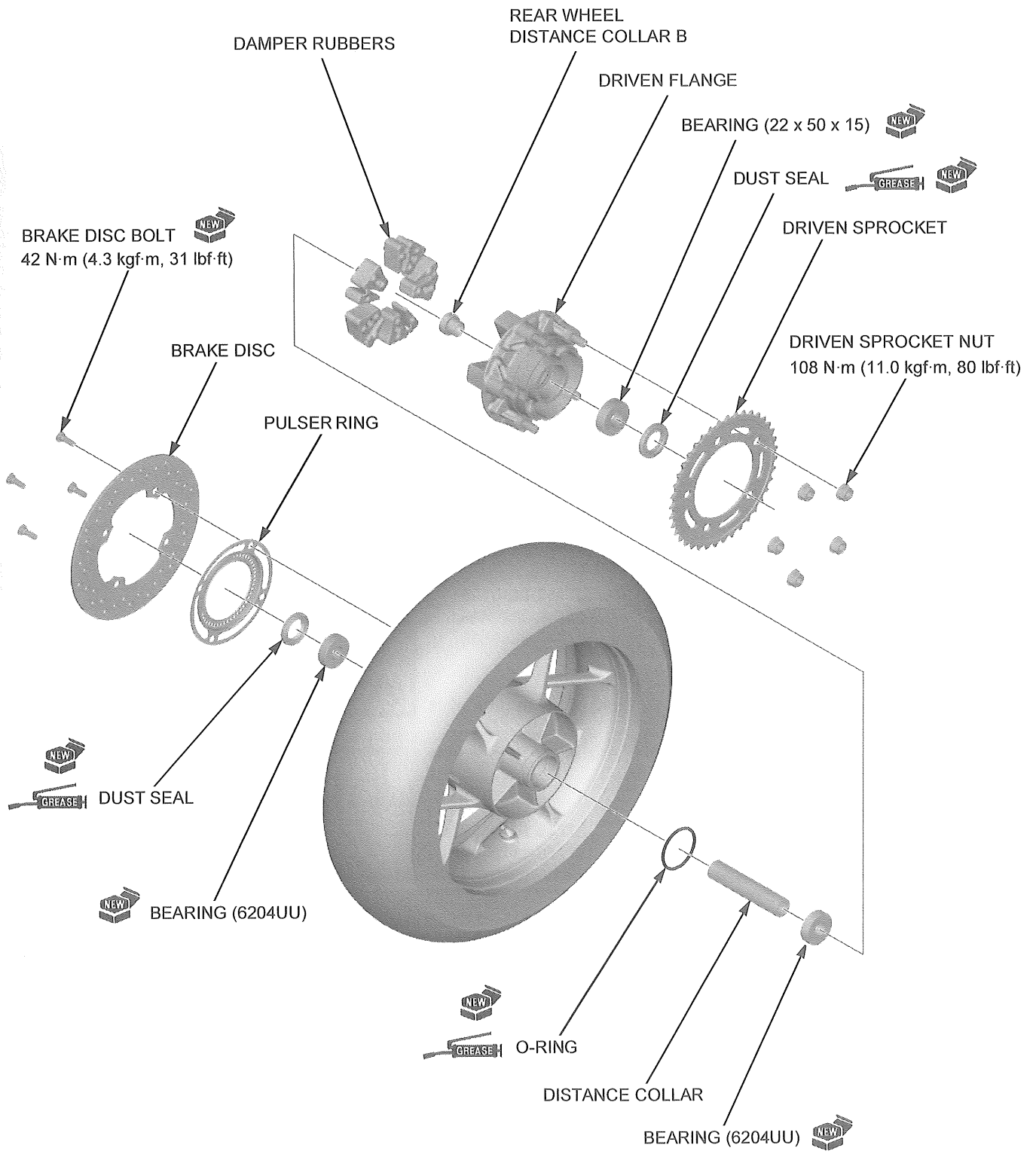

WHEEL BEARING REPLACEMENT

Drive out the rear wheel distance collar B [1].

TOOLS:

Driver [2]	**07749-0010000**
Attachment, 22 x 24 mm [3]	**07746-0010800**
Pilot, 20 mm [4]	**07746-0040500**

Remove the bearing from the driven flange [5].

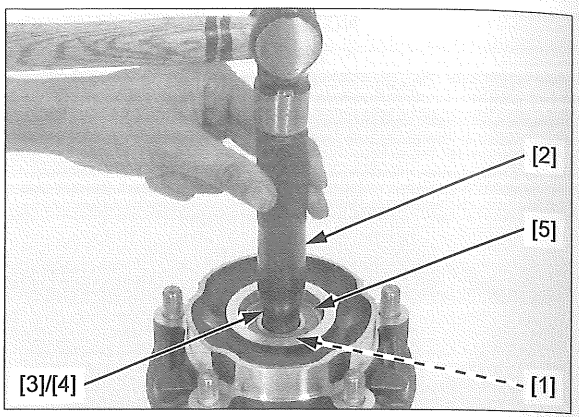

Install the bearing remover head [1] into the bearing. From the opposite side, install the bearing remover shaft [2] and drive out the bearing from the wheel hub.

NOTE:

- Replace the wheel bearings in pairs. Do not reuse old bearings.

TOOLS:

Bearing remover head, 20 mm	**07746-0050600**
Bearing remover shaft	**07GGD-0010100**

Remove the distance collar and drive out the other bearing.

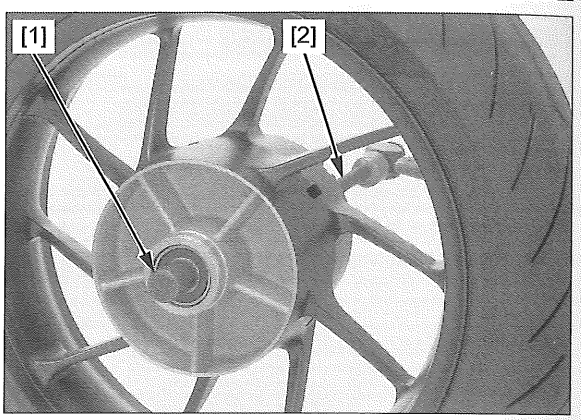

Drive in a new right side bearing [1] squarely until it is fully seated.

NOTE:

- Never install the old bearing, once the bearing has been removed, the bearing must be replaced with a new one.

TOOLS:

Driver [2]	**07749-0010000**
Attachment, 52 x 55 mm [3]	**07746-0010400**
Pilot, 20 mm [4]	**07746-0040500**

Install the distance collar.

Drive in a new left side bearing squarely until it is seated on the distance collar.

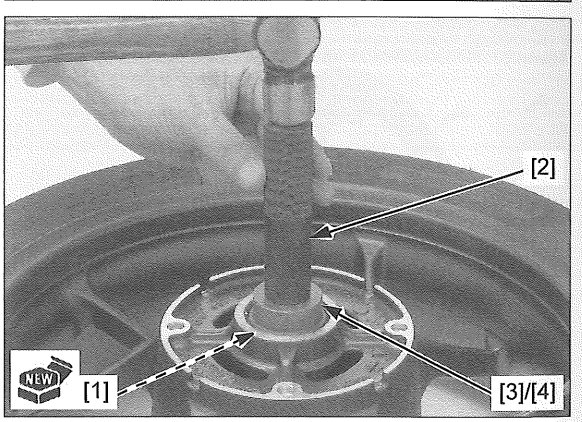

Drive the rear wheel distance collar B [1] to a new driven flange bearing [2].

TOOLS:

Driver [3]	**07749-0010000**
Attachment, 28 x 30 mm [4]	**07946-1870100**
Pilot, 20 mm [5]	**07746-0040500**

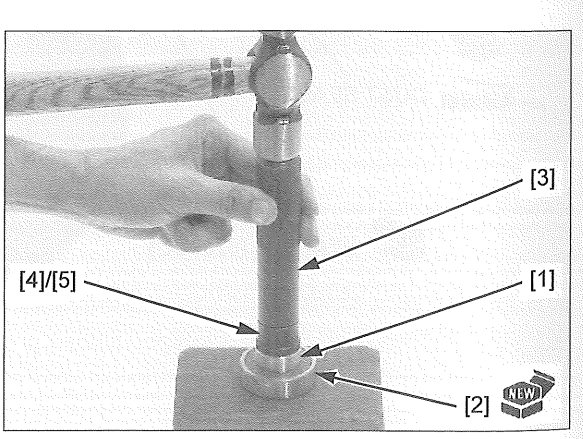

Drive in the driven flange bearing/collar [1] squarely with its collar side facing down until it is fully seated.

TOOLS:

Driver [2]	**07749-0010000**
Attachment, 42 x 47 mm [3]	**07746-0010300**
Pilot, 20 mm [4]	**07746-0040500**

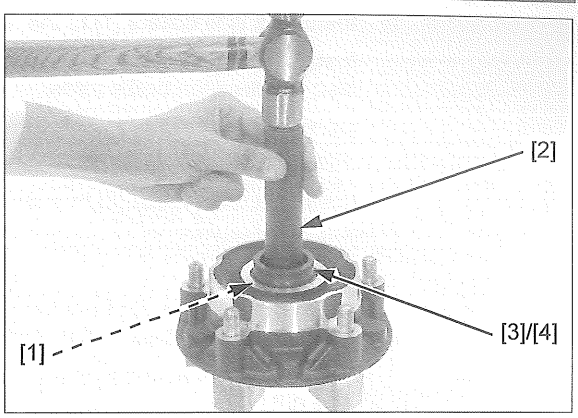

DRIVEN FLANGE STUD BOLT REPLACEMENT

Check that the length from the stud bolt head to the driven flange surface is within specifications.

STANDARD [1]: 19.0 – 20.5 mm (0.75 – 0.81 in)

When removing the driven flange stud bolts, install and tighten new stud bolts into the driven flange so that the length from the bolt head to the driven flange surface is within specifications.

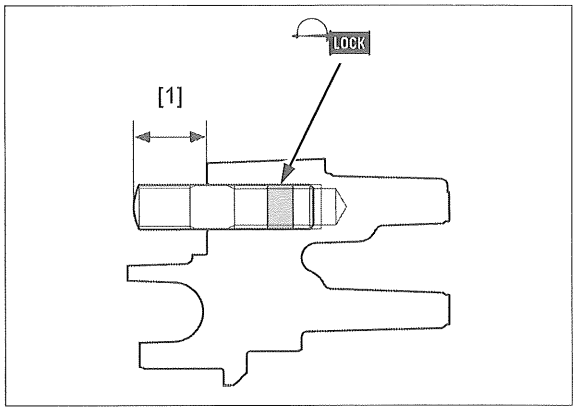

TIRE VALVE REMOVAL/INSTALLATION

Refer to front tire valve removal/installation (page 16-14).

INSTALLATION

Install the brake bracket [1] to the swingarm.

NOTE:

- Align the bracket groove with swingarm tab.

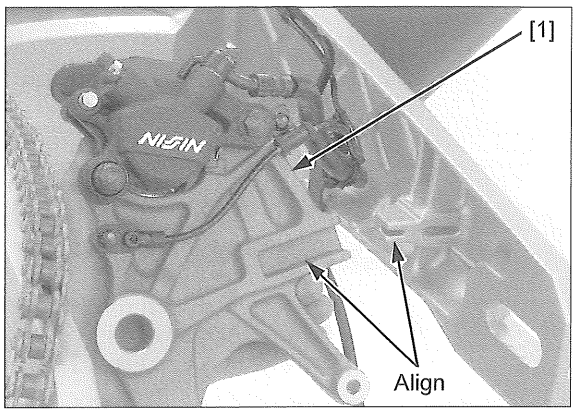

Install the side collars [1] to the rear wheel.

Install the rear wheel in the swingarm aligning the brake disc between the brake pads.

NOTE:

- Be careful not to damage the brake pads.

Install the drive chain [2] over the driven sprocket.

Apply a thin coat of grease to the rear axle outer surface.

Install the rear axle [3] from the left side through the left adjusting plate [4], swingarm and rear wheel.

Install the right adjusting plate [5], washer [6], and rear axle nut [7].

Tighten the rear axle nut to the specified torque.

TORQUE: 98 N·m (10.0 kgf·m, 72 lbf·ft)

Check the clearance gap between the rear wheel speed sensor bracket and pulser ring (page 19-23).

Install the parking brake caliper (page 18-20).

Install the drive chain case (page 2-31).

Adjust the drive chain slack (page 3-15).

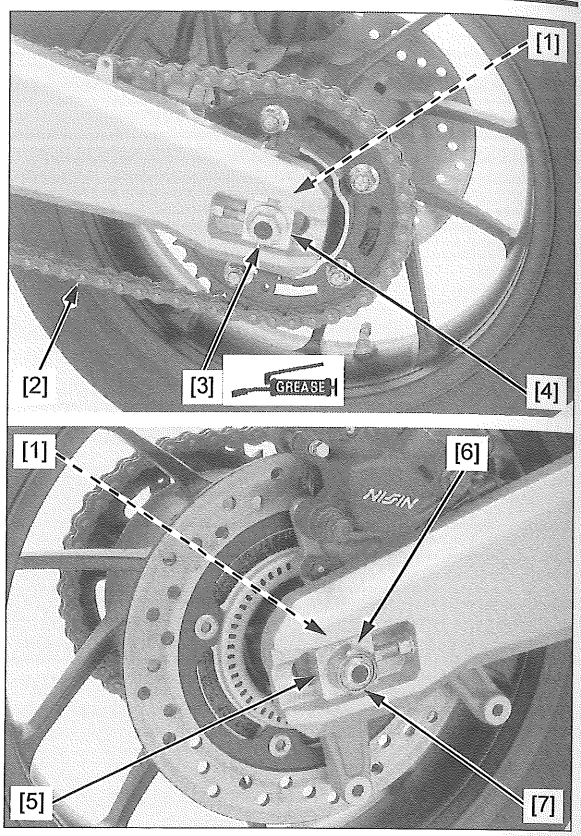

SHOCK LINKAGE

REMOVAL/INSTALLATION

Support the motorcycle using a safety stand or hoist, raise the rear wheel off the ground.

Remove the following:

- Shock link plate nut [1] and bolt [2] (swingarm side)
- Shock link plate nut [3], bolt [4] (shock arm side)
- Shock link plates [5]
- Shock absorber lower mounting nut [6] and bolt [7]
- Shock arm nut [8], bolt [9] and shock arm [10]

Installation is in the reverse order of removal.

TORQUE:

Shock absorber lower mounting nut:
44 N·m (4.5 kgf·m, 32 lbf·ft)

Shock arm nut:
44 N·m (4.5 kgf·m, 32 lbf·ft)

Shock link plate nut:
44 N·m (4.5 kgf·m, 32 lbf·ft)

NOTE:

- Install the shock link plates with the "OUT SIDE" mark [11] facing outside.

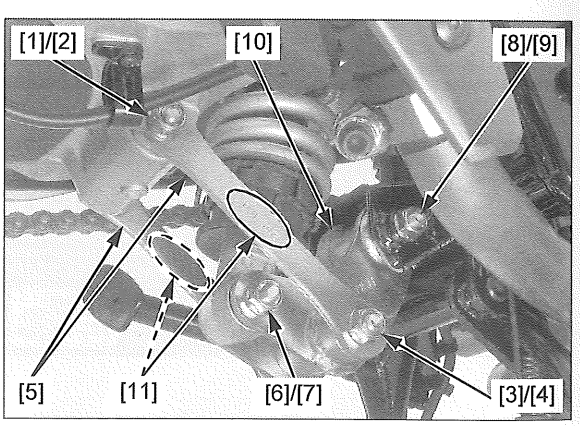

INSPECTION

Remove the collars [1] from the shock arm [2].

Check the collars for wear or damage and replace if necessary.

Check the shock arm for cracks or damage and replace if necessary.

Check the needle bearings [3] for damage or loose fit and replace them if necessary (page 17-9).

Apply molybdenum disulfide grease to the needle bearing rotating areas.

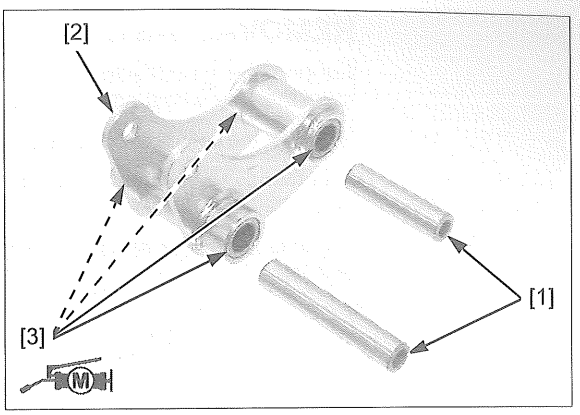

BEARING REPLACEMENT

Remove the needle bearings [1] using the special tools.

TOOLS:

Bearing remover set, 17 mm [2]	**07936-3710300**
Remover handle [3]	**07936-3710100**
Remover weight [4]	**07741-0010201**

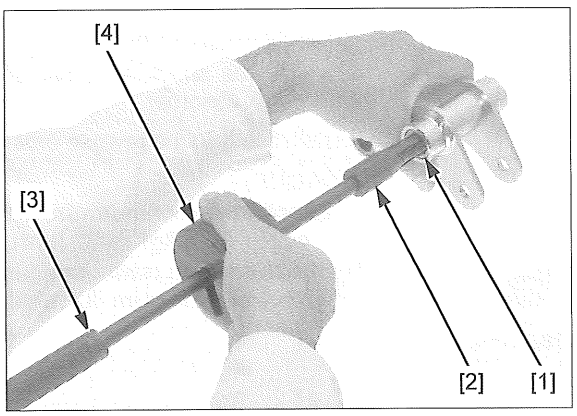

Apply molybdenum disulfide grease to new needle bearings [1] rotating area.

NOTE:

- Never install the old bearing, once the bearing has been removed, the bearing must be replaced with a new one.

Install the needle bearings with the marked and dust seal side facing out until it is flush with the shock arm surface using a hydraulic press and special tools as shown.

TOOLS:

Driver [2]	**07749-0010000**
Attachment, 22 x 24 mm [3]	**07746-0010800**
Pilot, 17 mm [4]	**07746-0040400**

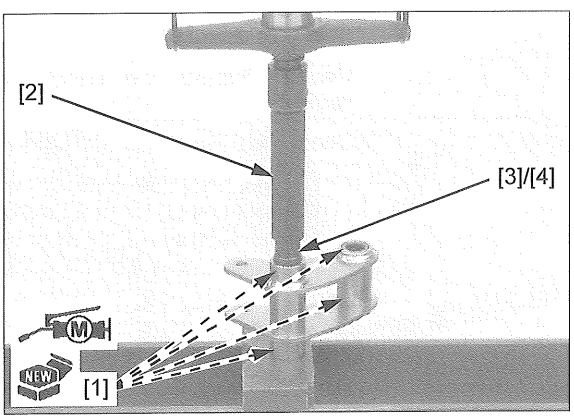

SHOCK ABSORBER

REMOVAL/INSTALLATION

Support the motorcycle using a safety stand or hoist, raise the rear wheel off the ground.

Remove the luggage box/battery box (page 2-26).

Remove the shock arm nut [1] and bolt [2] (swingarm side).

Remove the shock absorber lower mounting nut [3] and bolt [4].

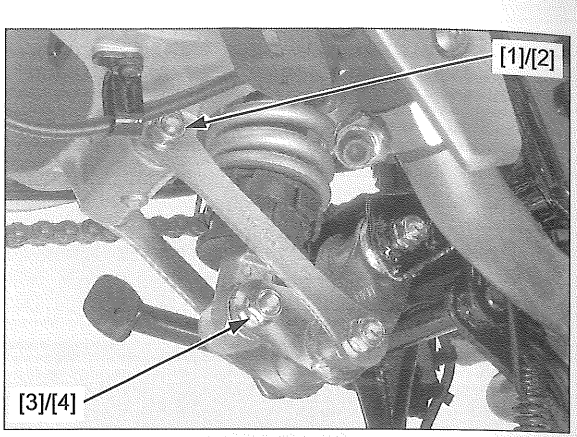

Remove the shock absorber upper mounting nut [1].

Remove the shock absorber upper mounting bolt [2] and shock absorber.

Installation is in the reverse order of removal.

TORQUE:

Shock absorber mounting nut:
44 N·m (4.5 kgf·m, 32 lbf·ft)

Shock arm nut (swingarm side):
44 N·m (4.5 kgf·m, 32 lbf·ft)

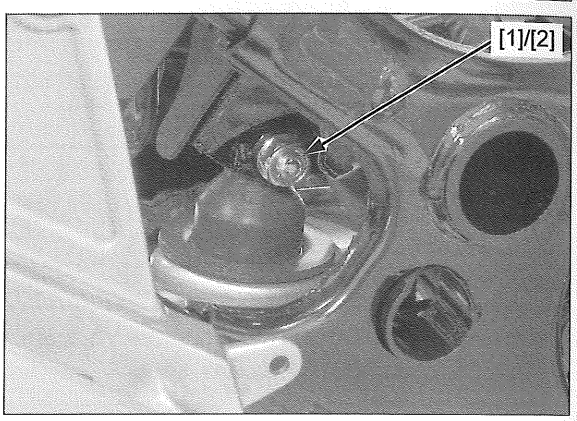

INSPECTION

Visually inspect the shock absorber for wear or damage.

Check the following:

- Damper rod [1] for bends or damage
- Damper unit [2] for deformation or oil leaks
- Rubber bumper [3] for wear or damage
- Bushing [4] for wear or damage

Replace the shock absorber as an assembly if necessary.

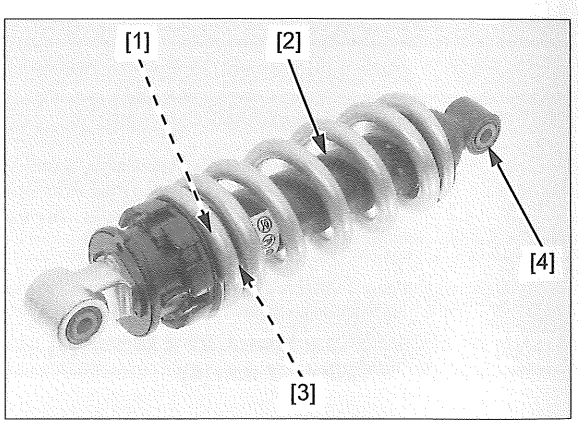

Remove the collar [1] and dust seals [2].

Check the needle bearing [3] for damage or loose fit and replace it if necessary (page 17-11).

Check the collar for wear or damage and replace it if necessary.

Apply molybdenum disulfide grease to the needle bearings rotating area and new dust seal lips.

Install dust seals until they are flush with the shock absorber surfaces.

Install the collar.

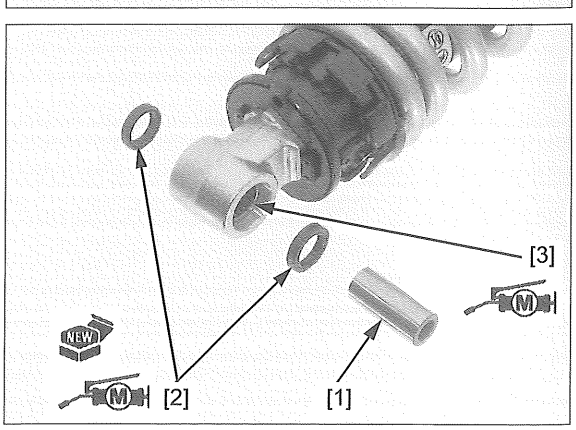

BEARING REPLACEMENT

Remove the needle bearing [1] out of the lower pivot using a hydraulic press and special tool.

TOOLS:

Driver [2]	**07749-0010000**
Attachment, 22 x 24 mm [3]	**07746-0010800**
Pilot, 17 mm [4]	**07746-0040400**

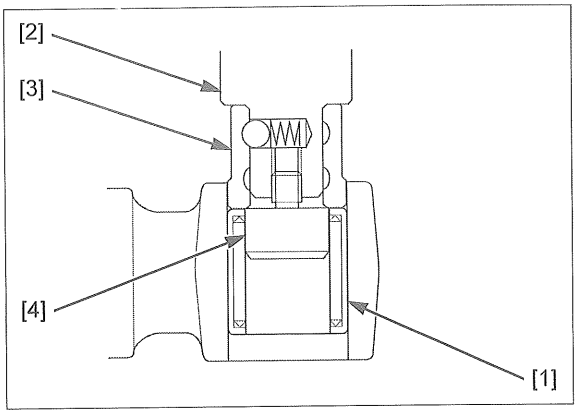

Apply molybdenum disulfide grease to new needle bearing [1] rotating area.

NOTE:

- Never install the old bearing, once the bearing has been removed, the bearing must be replaced with a new one.

Install the needle bearing into the lower pivot to the specified range using a hydraulic press and special tools as shown.

TOOLS:

Driver [2]	**07749-0010000**
Attachment, 22 x 24 mm [3]	**07746-0010800**
Pilot, 17 mm [4]	**07746-0040400**

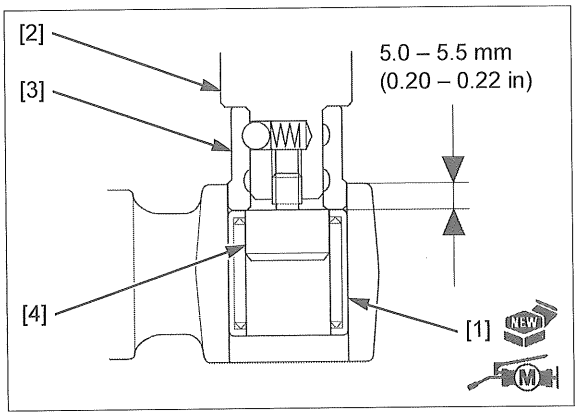

SWINGARM

REMOVAL

Remove the following:

- Rear wheel (page 17-4)
- Shock absorber (page 17-10)

Remove the bolt [1] and parking brake cable guide [2].

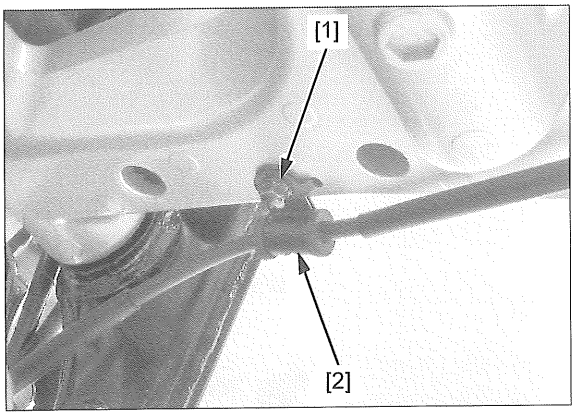

Remove the bolt [1], rear brake hose D [2], and rear speed sensor wire clamp [3].

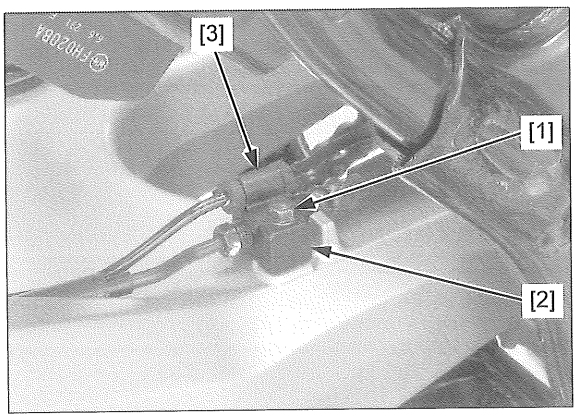

Remove the socket bolt [1] and brake hose guide [2].

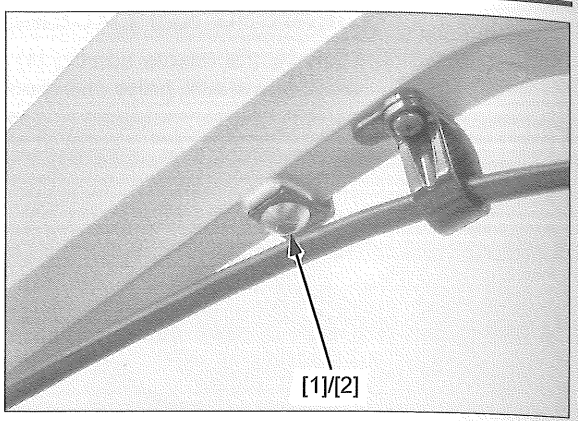

Remove the swingarm pivot nut [1], washer [2], and pivot bolt [3].

Remove the swingarm [4] by releasing the parking brake cable [5] from the cable guides [6].

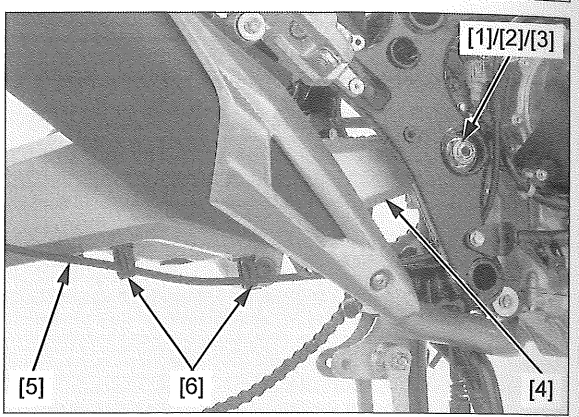

DISASSEMBLY/ASSEMBLY

NOTE:

- Install dust seals until they are flush with the swingarm surfaces.

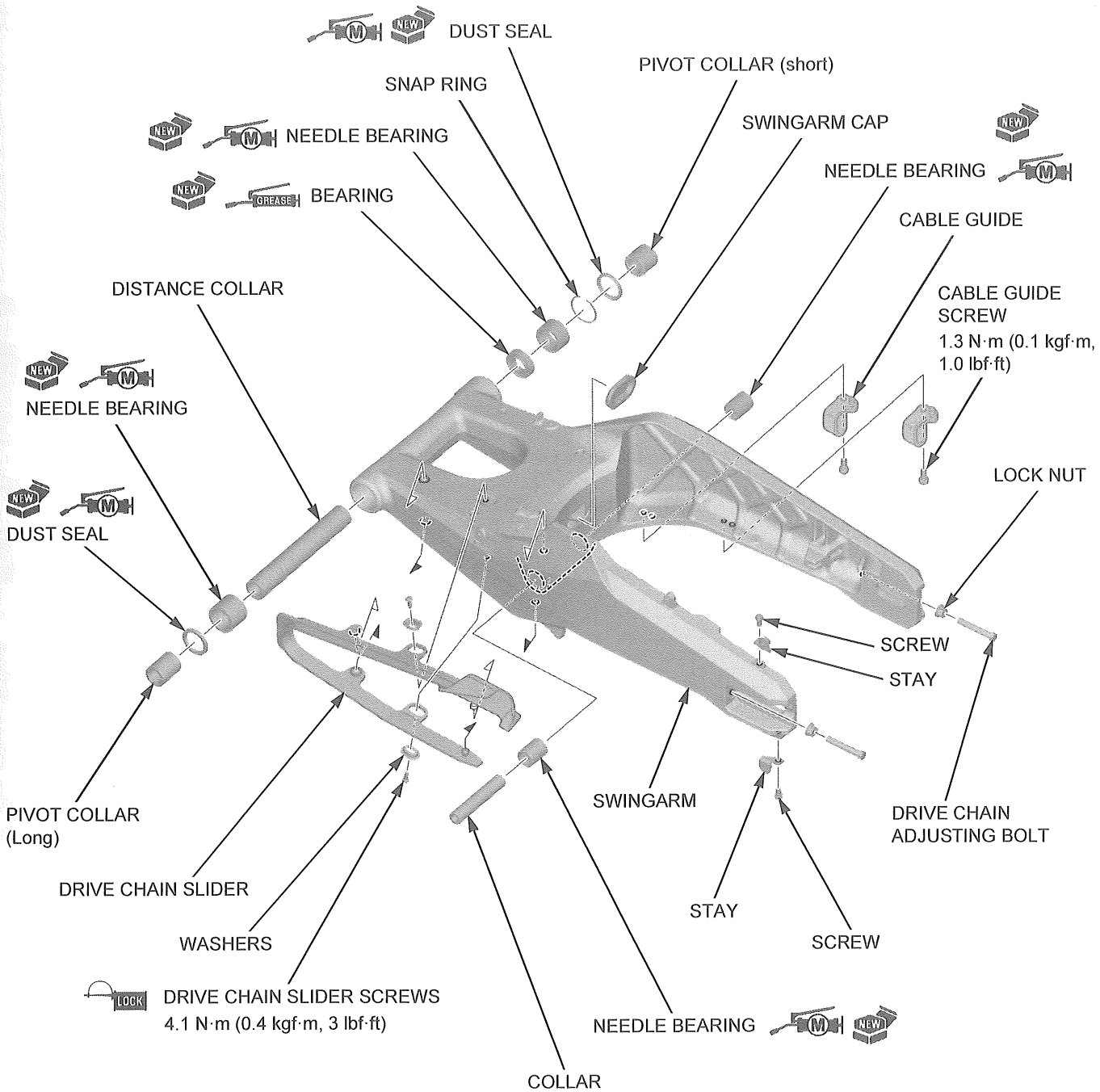

INSPECTION

Inspect the following parts for damage, abnormal wear, or deformation.

- Pivot collars
- Swingarm
- Bearings
- Drive chain slider

Replace if necessary.

PIVOT BEARING REPLACEMENT

SWINGARM PIVOT BEARING

Remove the snap ring [1] from the right pivot.

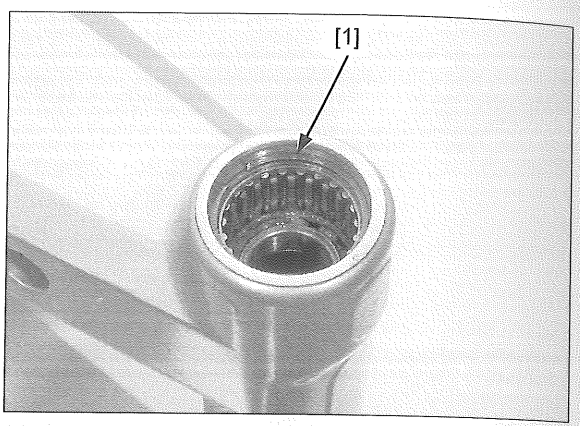

Remove the needle bearing [1] and ball bearing [2] out of the right pivot using a hydraulic press and special tool.

TOOLS:

Driver, 15 x 280L [3]	**07949-3710001**
Pilot, 28 mm [4]	**07746-0041100**

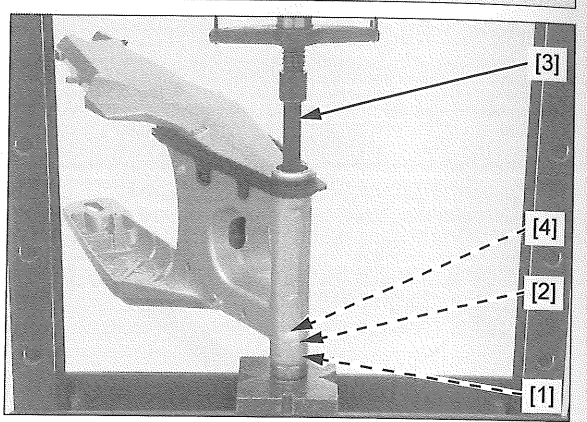

Drive the needle bearing [1] out of the left pivot.

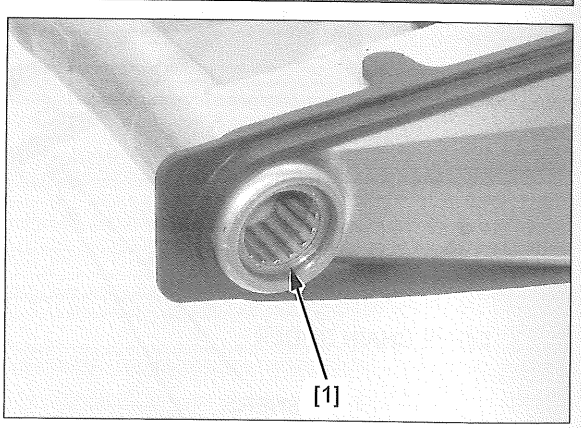

Apply molybdenum disulfide grease to a new needle bearing [1] rotating area.

Install the needle bearing into the left pivot with the marked side facing out to the specified range using a hydraulic press and special tools as shown.

TOOLS:

Driver [2]	**07749-0010000**
Attachment, 37 mm [3]	**07ZMD-MBW0200**
Pilot, 28 mm [4]	**07746-0041100**

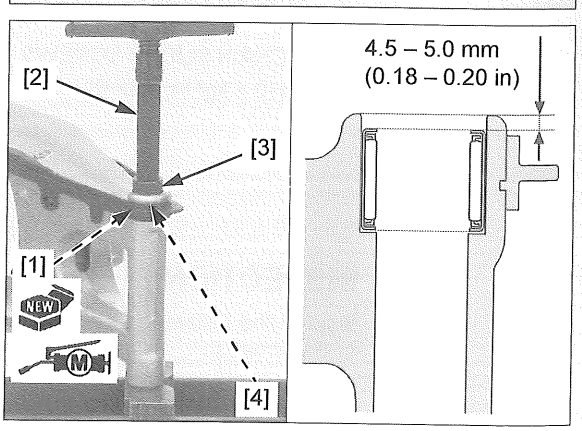

Apply grease to a new ball bearing rotating area.

Install the ball bearing [1] into the right pivot with the marked side facing out until it is fully seated using a hydraulic press and special tools as shown.

TOOLS:

Driver [2]	**07749-0010000**
Attachment, 37 mm [3]	**07ZMD-MBW0200**
Pilot, 20 mm [4]	**07746-0040500**

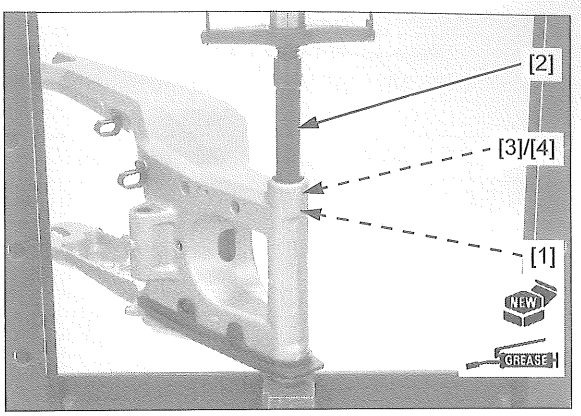

Apply molybdenum disulfide grease to a new needle bearing rotating area.

Install the needle bearing [1] into the right pivot with the marked side facing out until it is fully seated using a hydraulic press and special tools as shown.

TOOLS:

Driver [2]	**07749-0010000**
Attachment, 37 mm [3]	**07ZMD-MBW0200**
Pilot, 30 mm [4]	**07746-0040700**

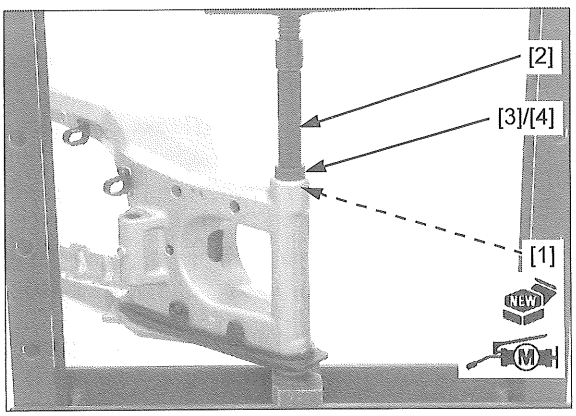

Install the snap ring [1] into the right pivot groove securely.

NOTE:

- Do not reuse the snap ring which could easily spin in the groove.
- Make sure that the snap ring is firmly seated in the groove.

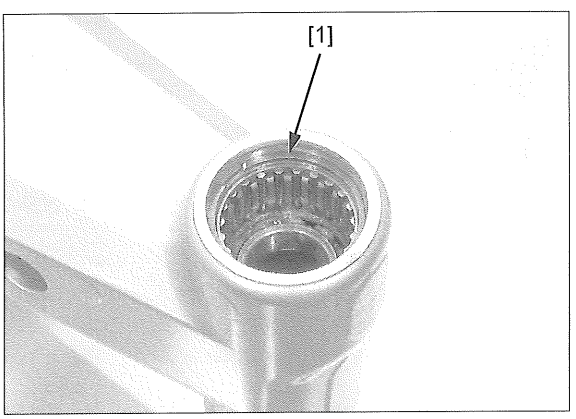

SHOCK LINKAGE BRACKET BEARING

Remove the needle bearings [1] out of the shock absorber bracket using the special tools.

TOOLS:

Bearing remover set, 17 mm [2]	**07936-3710300**
Remover handle [3]	**07936-3710100**
Remover weight [4]	**07741-0010201**

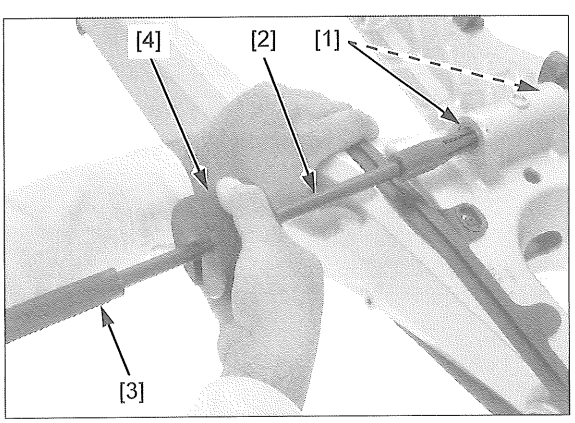

Apply molybdenum disulfide grease to a new needle bearing rotating area.

Install each needle bearing [1] into the shock absorber bracket with the marked side facing out until it is fully seated using a hydraulic press and special tools as shown.

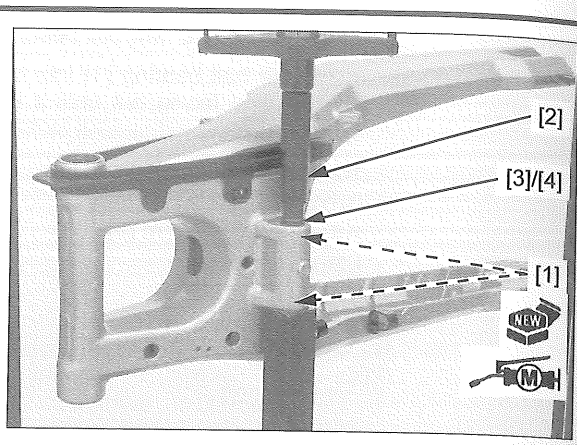

TOOLS:

Driver [2]	**07749-0010000**
Attachment, 22 x 24 mm [3]	**07746-0010800**
Pilot, 17 mm [4]	**07746-0040400**

INSTALLATION

Apply a thin coat of grease to the swingarm pivot bolt [1] sliding surface.

Set the parking brake cable [2] through the cable guides [3].

Set the drive chain [4] onto the swingarm [5] and install the swingarm to the frame.

Install the swingarm pivot bolt from the left side.

Install the washer [6] and swingarm pivot nut [7].

Tighten the swingarm pivot nut to the specified torque.

TORQUE: 98 N·m (10.0 kgf·m, 72 lbf·ft)

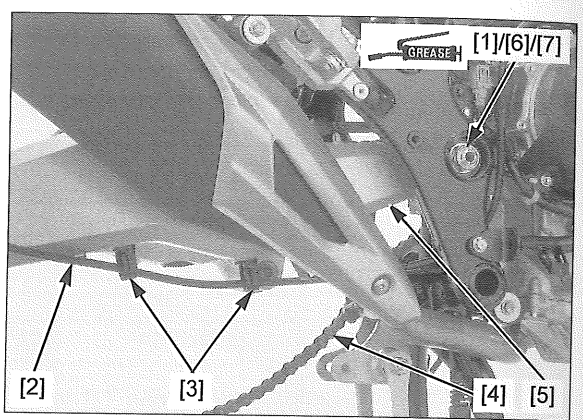

Install the rear brake hose D [1], rear speed sensor wire/clamp [2], and bolt [3].

Tighten the bolt securely.

NOTE:

- Install the joint of the brake hose D against the stopper [4].

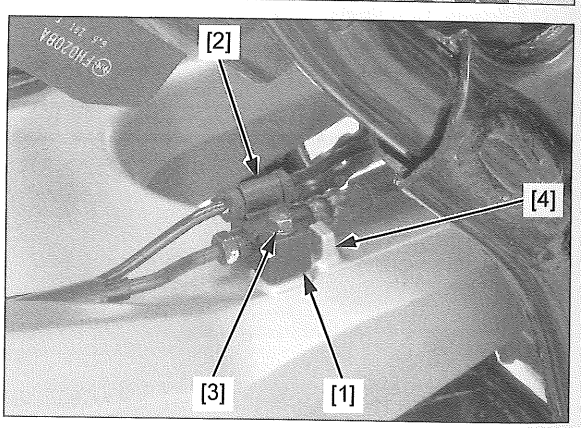

Install the brake hose guide [1] and socket bolt [2].

Tighten the bolt securely.

NOTE:

- Align the hose guide with the swingarm stopper.

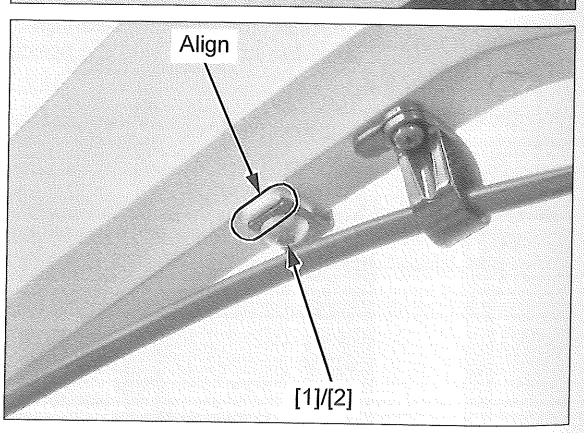

Install the parking brake cable guide [1] and bolt [2].

Tighten the bolt securely.

NOTE:

- Align the cable guide tab with the swingarm hole.

Install the following:

– Shock absorber (page 17-10)
– Rear wheel (page 17-4)

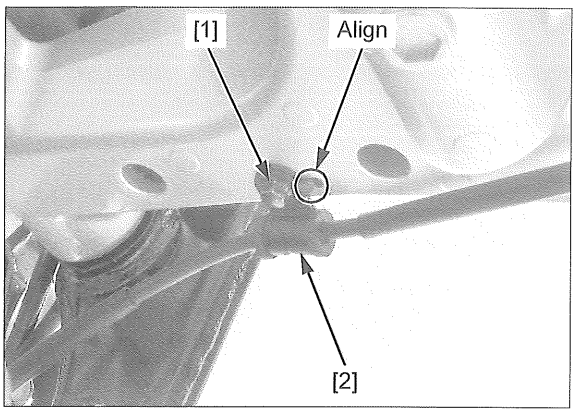

SERVICE INFORMATION 18-2

TROUBLESHOOTING 18-2

COMPONENT LOCATION 18-3

BRAKE FLUID REPLACEMENT/
AIR BLEEDING 18-5

BRAKE PAD/DISC 18-7

FRONT MASTER CYLINDER 18-12

REAR MASTER CYLINDER 18-14

FRONT BRAKE CALIPER 18-16

REAR BRAKE CALIPER 18-18

PARKING BRAKE CALIPER 18-20

PARKING BRAKE LEVER 18-22

SERVICE INFORMATION

GENERAL

⚠CAUTION

Frequent inhalation of brake pad dust, regardless of material composition, could be hazardous to your health.
- Avoid breathing dust particles.
- Never use an air hose or brush to clean brake assemblies. Use an OSHA-approved vacuum cleaner.

NOTICE

Spilling brake fluid will severely damage instrument lenses and painted surface. It is also harmful to some rubber parts. Be careful whenever you remove the reservoir cover; make sure the reservoir is horizontal first.

- A contaminated brake disc or pad reduces stopping power. Discard contaminated pads and clean a contaminated disc with a high quality brake degreasing agent.
- Check the brake system by applying the brake lever after the air bleeding.
- Never allow contaminates (dirt, water, etc.) to get into an open reservoir.
- Once the hydraulic system has been opened, or if the brake feels spongy, the system must be bled.
- Always use fresh DOT 4 brake fluid from a sealed container when servicing the system. Do not mix different types of fluid, they may not be compatible.
- Always check brake operation before riding the motorcycle.
- This section covers service of the conventional brake components of the brake system. For Anti-lock Brake System (ABS) service (page 19-2)

TROUBLESHOOTING

Brake lever soft or spongy
- Air in hydraulic system
- Leaking hydraulic system
- Contaminated brake pad/disc
- Worn caliper piston seal
- Worn master cylinder piston cups
- Worn brake pad/disc
- Contaminated caliper
- Contaminated master cylinder
- Caliper not sliding properly
- Low brake fluid level
- Clogged fluid passage
- Warped/deformed brake disc
- Sticking/worn caliper piston
- Sticking/worn master cylinder piston
- Bent brake lever

Brake lever hard
- Clogged/restricted hydraulic system
- Sticking/worn caliper piston
- Caliper not sliding properly
- Worn caliper piston seal
- Sticking/worn master cylinder piston
- Bent brake lever

Brake drags
- Contaminated brake pad/disc
- Misaligned wheel
- Badly worn brake pad/disc
- Warped/deformed brake disc
- Caliper not sliding properly
- Clogged/restricted hydraulic system
- Sticking/worn caliper piston
- Clogged master cylinder port
- Sticking master cylinder piston

Poor brake performance (Parking brake)
- Incorrect adjustment of parking brake
- Sticking/damaged parking brake cable
- Contaminated brake pad/disc
- Worn brake pad/disc
- Warped/deformed brake disc

COMPONENT LOCATION

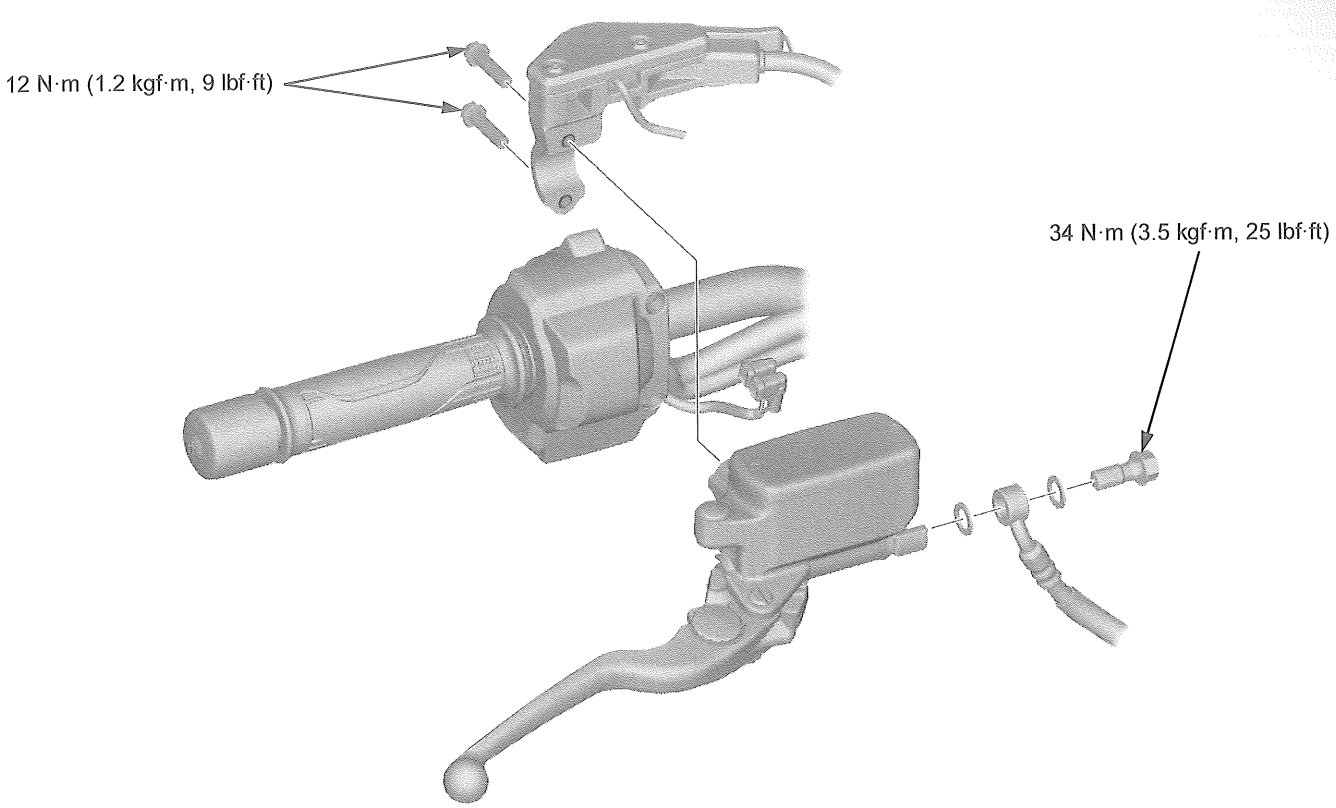

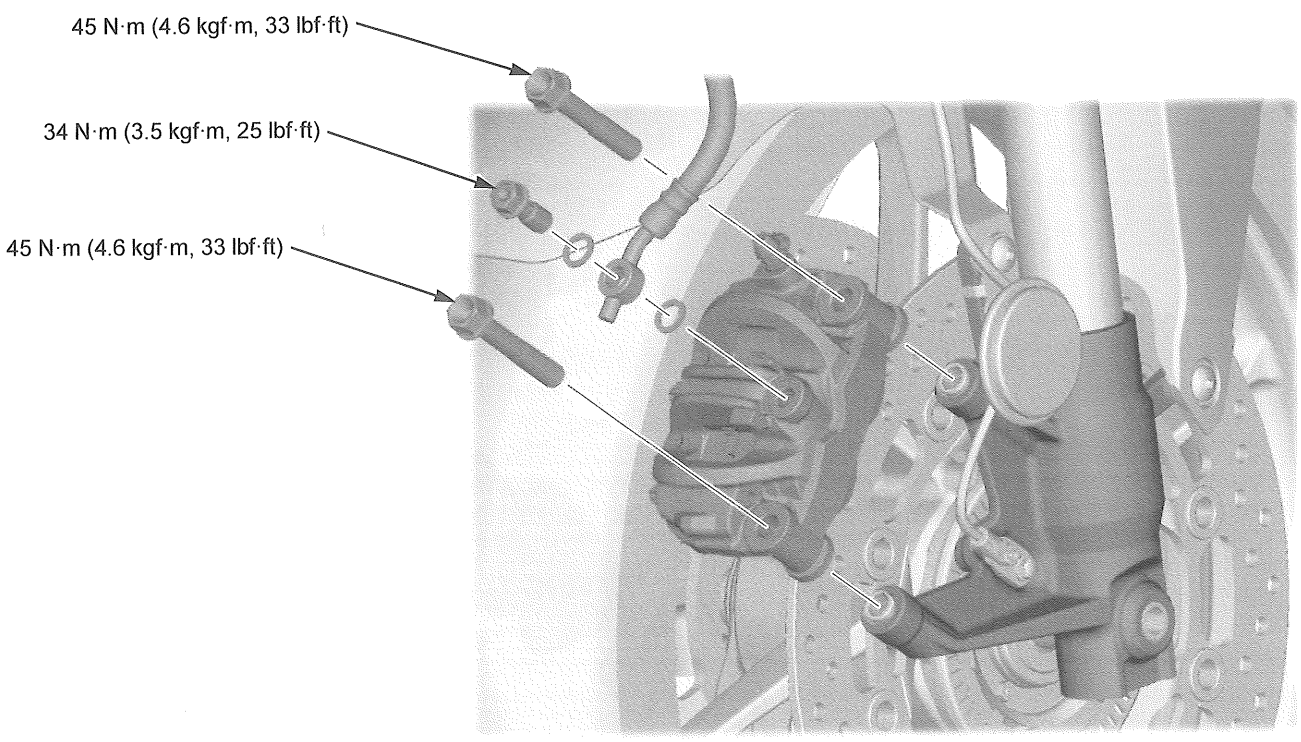

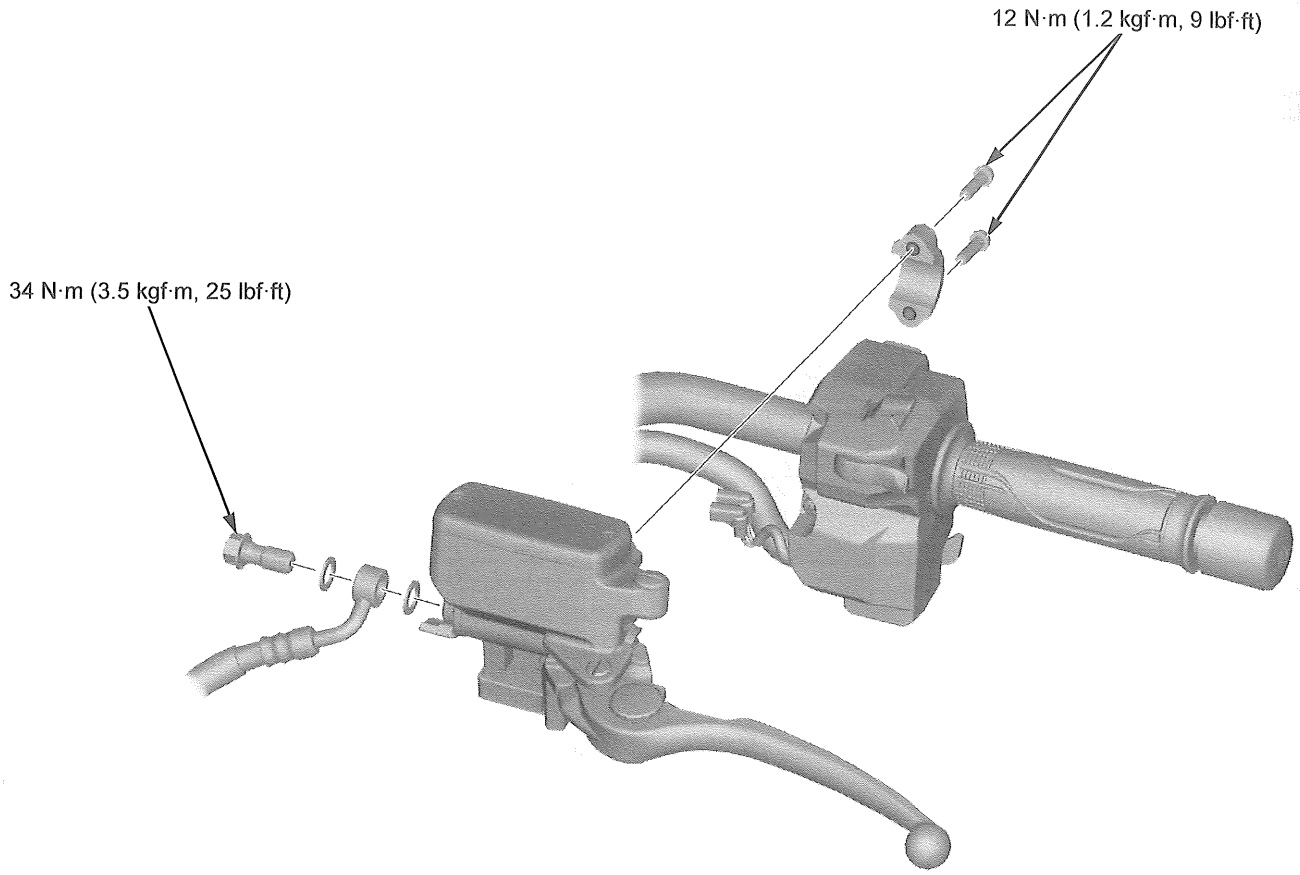
12 N·m (1.2 kgf·m, 9 lbf·ft)
34 N·m (3.5 kgf·m, 25 lbf·ft)

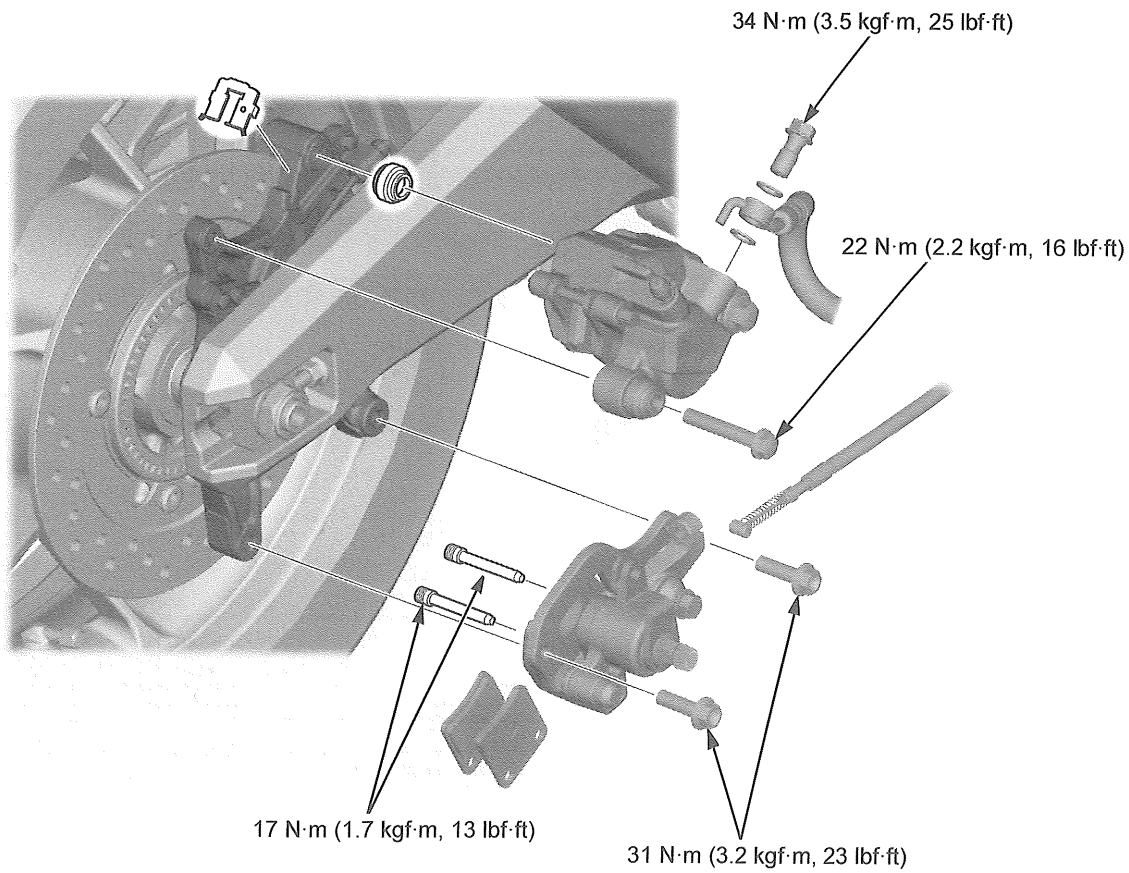
34 N·m (3.5 kgf·m, 25 lbf·ft)
22 N·m (2.2 kgf·m, 16 lbf·ft)
17 N·m (1.7 kgf·m, 13 lbf·ft)
31 N·m (3.2 kgf·m, 23 lbf·ft)

BRAKE FLUID REPLACEMENT/AIR BLEEDING

BRAKE FLUID DRAINING

Turn the handlebar until the reservoir is parallel to the ground.

Remove the following:

- Screws [1]
- Reservoir cover [2]
- Set plate [3]
- Diaphragm [4]

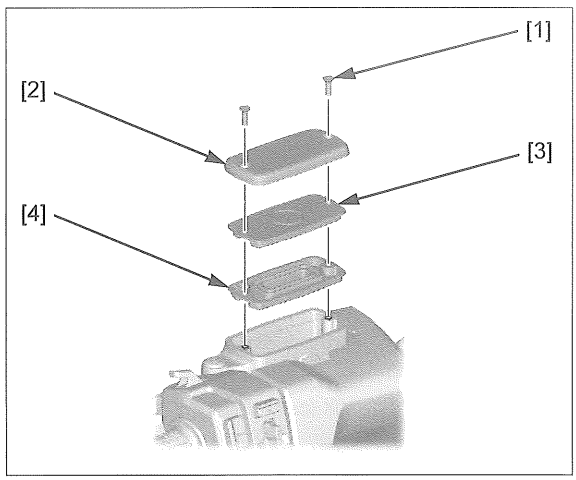

Connect a bleed hose to the caliper bleed valve [1].

Loosen the bleed valve and pump the brake lever until no more fluid flows out of the bleed valve.

Tighten the bleed valve.

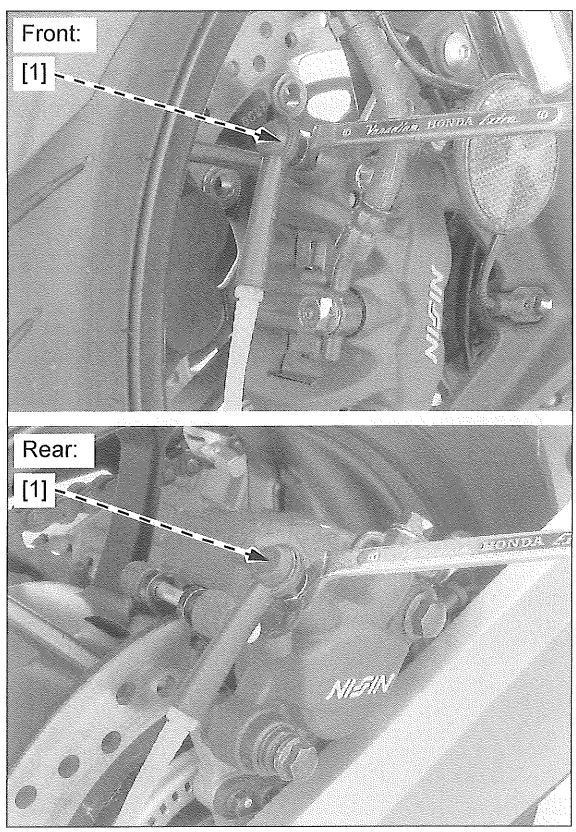

BRAKE FLUID FILLING/AIR BLEEDING

Fill the reservoir with DOT 4 brake fluid to the casting ledge [1] from a sealed container.

Connect a commercially available brake bleeder to the bleed valve [2].

Operate the brake bleeder and loosen the bleed valve.

If an automatic refill system is not used, add fluid when the fluid level in the reservoir is low.

NOTE:

- Check the fluid level often while bleeding the brake to prevent air from being pumped into the system.
- When using a brake bleeding tool, follow the manufacturer's operating instructions.

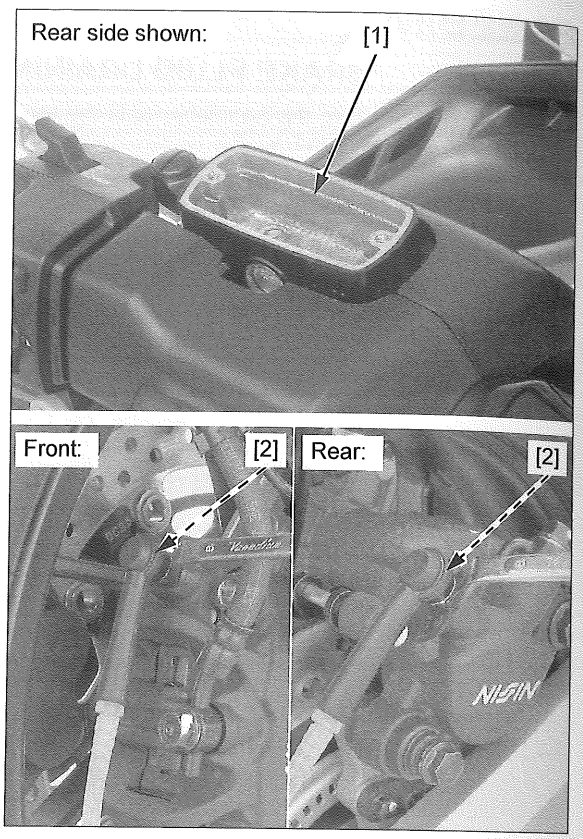

If air enters the bleeder from around the bleed valve threads, seal the threads with teflon tape.

Perform the bleeding procedure until the system is completely flushed/bled.

Close the bleed valve and operate the brake lever. If it still feels spongy, bleed the system again.

After bleeding the system completely, tighten the brake caliper bleed valve to the specified torque.

TORQUE: 5.4 N·m (0.6 kgf·m, 4.0 lbf·ft)

Fill the reservoir with DOT 4 brake fluid to the upper level line from a sealed container.

If the brake bleeder is not available, perform the following procedure.

Fill the reservoir with DOT 4 brake fluid to the casting ledge [1] from a sealed container.

Pump up the system pressure with the brake lever until the lever resistance is felt.

Connect a bleed hose to the bleed valve [2].

1. Squeeze the brake lever all the way and loosen the bleed valve 1/4 turn. Wait several seconds and then close the bleed valve.

NOTE:

- Do not release the brake lever until the bleed valve has been closed.

2. Release the brake lever slowly and wait several seconds after it reaches the end of its travel.
3. Repeat the steps 1 and 2 until there are no air bubbles in the bleed hose.

After bleeding the system completely, tighten the brake caliper bleed valve to the specified torque.

TORQUE: 5.4 N·m (0.6 kgf·m, 4.0 lbf·ft)

Fill the reservoir with DOT 4 brake fluid to the upper level line from a sealed container.

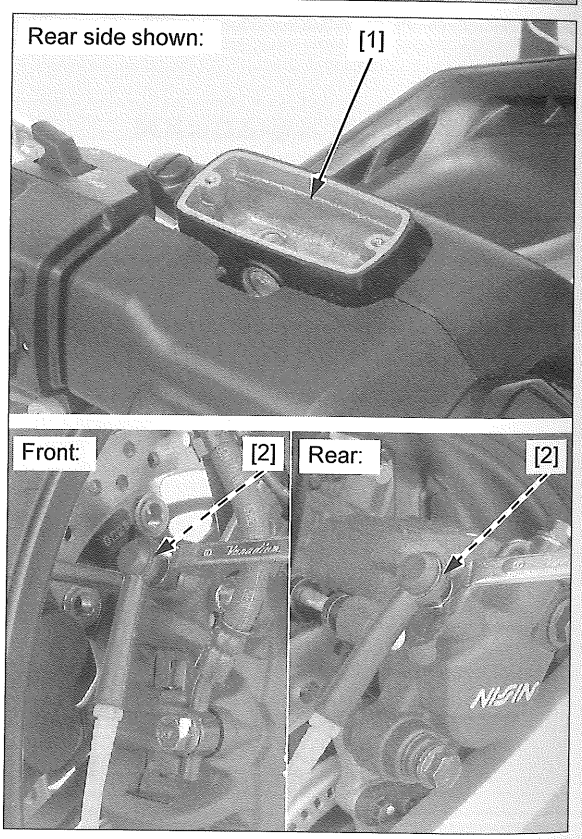

Turn the handlebar until the reservoir is parallel to the ground.

Install the following:

- Diaphragm [1]
- Set plate [2]
- Reservoir cover [3]
- Screws [4]

Tighten the screws to the specified torque.

TORQUE: 1.5 N·m (0.2 kgf·m, 1.1 lbf·ft)

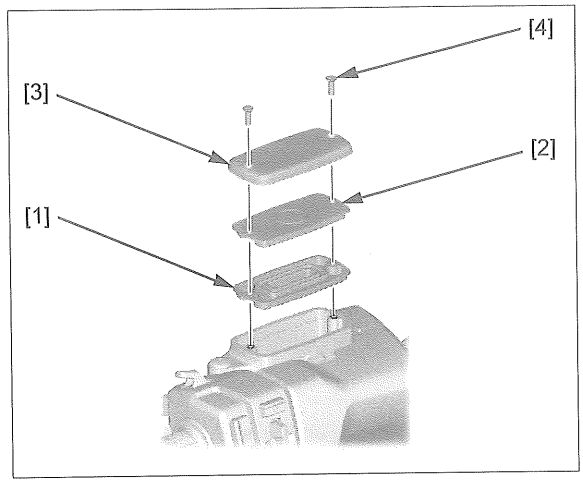

BRAKE PAD/DISC

NOTE:

- Always replace the brake pads in pairs to assure even disc pressure.
- Check the brake fluid level in the brake master cylinder reservoir as this operation causes the level to rise.

FRONT BRAKE PAD REPLACEMENT

Left side: Remove the cap nut [1] and release the brake hose clamper [2] from the front fender.

Remove the brake caliper mounting bolts [3] and brake calipers [4].

NOTE:

- Do not suspend the brake caliper from the brake hose.
- Do not operate the brake lever after removing the brake caliper.

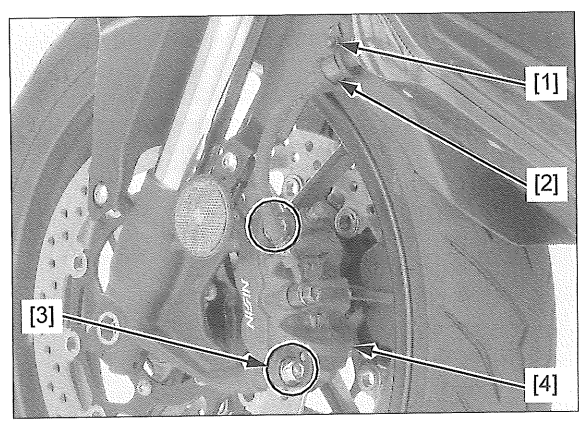

Right side: Remove the bolt [1] and release the front speed sensor wire [2] from the wire clamper [3].

Remove the brake hose clip [4].

Remove the brake caliper mounting bolts [5] and brake calipers [6].

NOTE:

- Do not suspend the brake caliper from the brake hose.
- Do not operate the brake lever after removing the brake caliper.

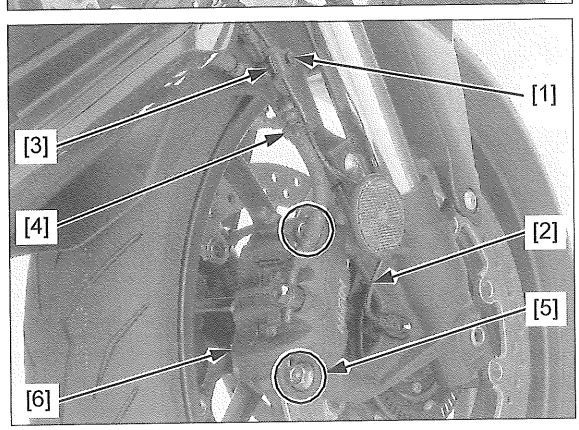

Push the brake pads [1] all the way to press the caliper pistons into caliper body.

NOTE:

- Check the brake fluid level in the brake master cylinder reservoir as this operation causes the level to rise.

Remove the brake pads and shim [2] as shown.

Check the pad spring and replace if necessary.

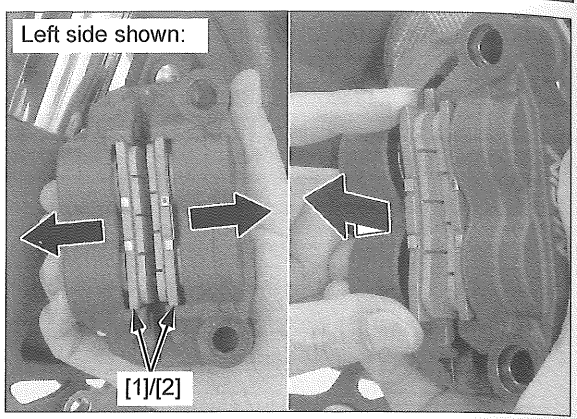

Clean the brake caliper inside.

Make sure that the caliper pistons are pressed into the caliper body all the way.

Install the new brake pad [1] and shim [2] by compressing the pad spring as shown.

Install the another side pad in a similar way.

NOTE:

- Align the pad lugs with the caliper grooves.

Make sure that the arrow mark [2] of the pad spring [3] is facing up.

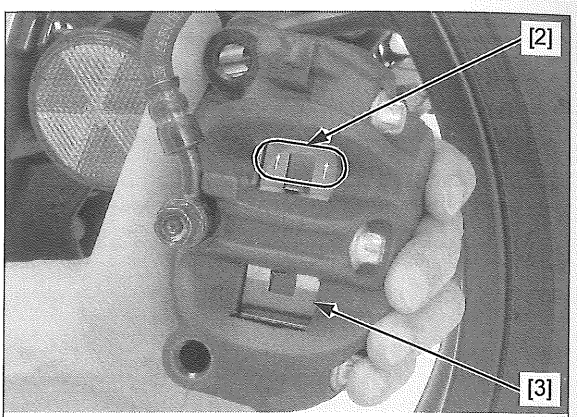

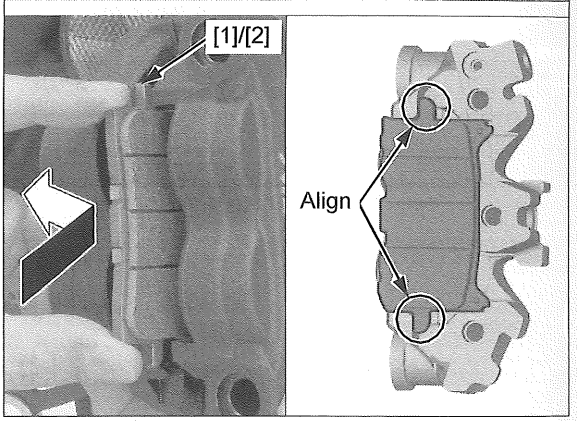

Make sure that the collars [1] are installed in the fork.

Install the brake caliper [2] and new mounting bolts [3].

NOTE:

- Be careful not to damage the brake pads.

Tighten the mounting bolts to the specified torque.

TORQUE: 45 N·m (4.6 kgf·m, 33 lbf·ft)

Clamp the front speed sensor wire [4] with the wire clamper [5].

Install the brake hose joint [6], wire clamper, and bolt [7].

Tighten the bolt securely.

Install the brake hose clip [8]

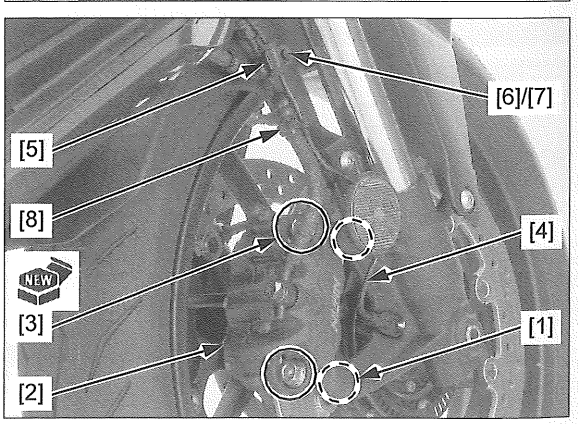

Make sure that the collars [1] are installed in the fork.

Install the brake caliper [2] and new mounting bolts [3].

NOTE:

- Be careful not to damage the brake pads.

Tighten the mounting bolts to the specified torque.

TORQUE: 45 N·m (4.6 kgf·m, 33 lbf·ft)

Install the brake hose clamper [4] and bolt [5] and tighten the bolt securely.

Operate the brake lever to seat the caliper pistons against the pads.

REAR BRAKE PAD REPLACEMENT

Remove the brake pad pin [1] and rear brake caliper mounting bolt [2].

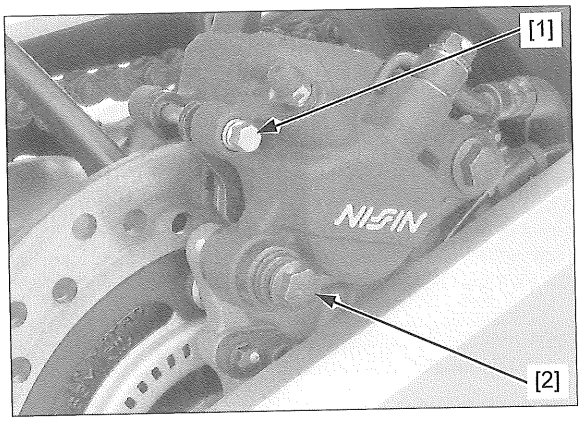

Lift the caliper [1] and remove the brake pads [2].

NOTE:

- Do not operate the brake lever after removing the brake pads.

Make sure that the retainer [3] and pad spring are installed to the brake caliper.

Install the new brake pads to the brake caliper so that their ends seat against the retainer.

Lower the caliper.

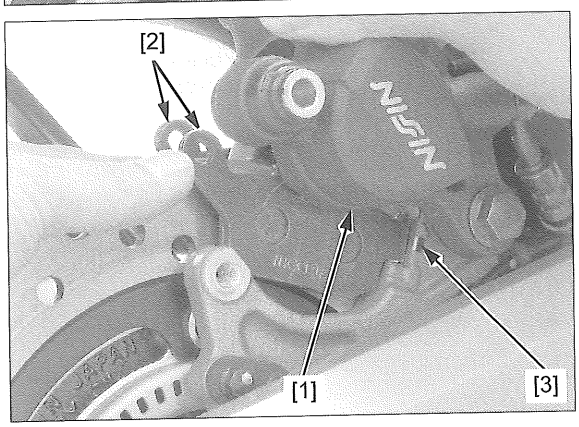

Loosely install a new rear brake caliper mounting bolt [1].

Check that the brake pad pin stopper ring [2] is in good condition, replace it if necessary.

Apply silicone grease to the stopper ring and install it to the brake pad pin [3] groove.

Align the brake pad pin holes of the pads [4] and brake caliper by pushing the pads against the pad spring.

Install the brake pad pin.

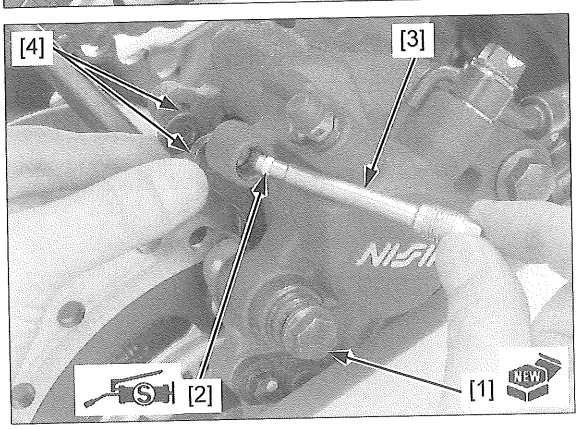

Tighten the rear brake caliper mounting bolt [1] to the specified torque.

TORQUE: 22 N·m (2.2 kgf·m, 16 lbf·ft)

Tighten the brake pad pin [2] to the specified torque.

TORQUE: 17 N·m (1.7 kgf·m, 13 lbf·ft)

Operate the brake lever to seat the caliper pistons against the pads.

NOTE:

- If the pad retainer [3] is removed, apply Honda Bond A to the retainer seating surface.

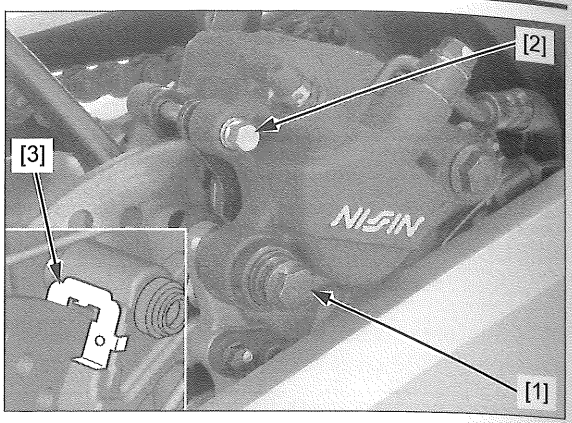

PARKING BRAKE PAD/PIN REPLACEMENT

Loosen the parking brake pad pins [1].

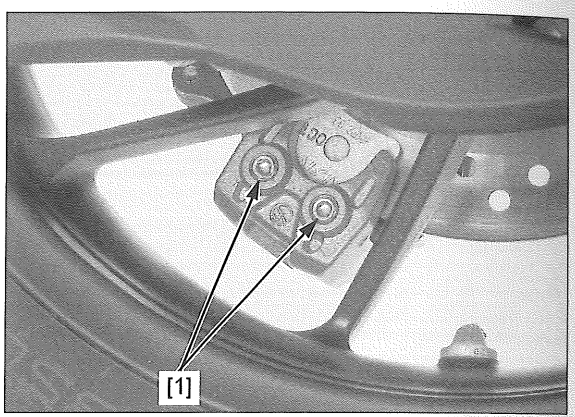

Remove the brake caliper mounting bolts [1] and caliper [2] from the bracket.

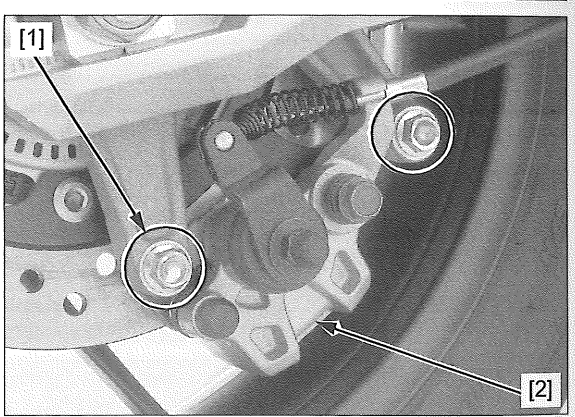

Remove the parking brake pad pins [1] and pads [2].

Make sure that the pad spring is installed in position.

Install new parking brake pads.

Loosely install the new pad pins.

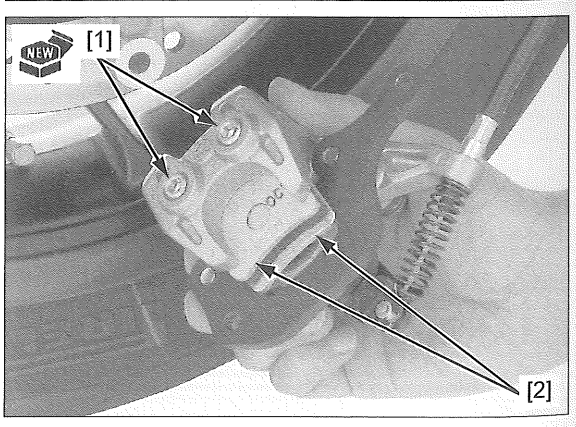

Install the caliper [1] and new brake caliper mounting bolts [2].

NOTE:

- Be careful not to damage the brake pads.

Tighten the mounting bolts to the specified torque.

TORQUE: 31 N·m (3.2 kgf·m, 23 lbf·ft)

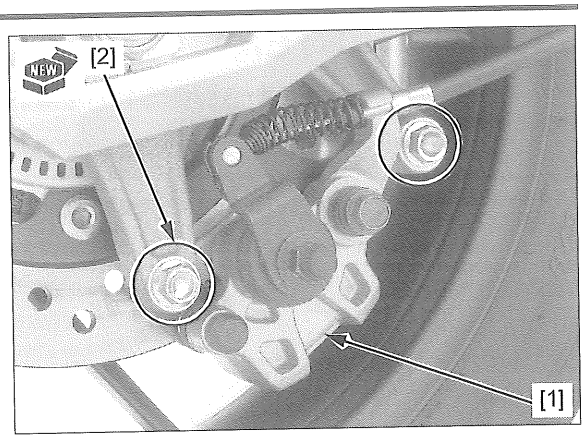

Tighten the parking brake pad pins [1] to the specified torque.

TORQUE: 17 N·m (1.7 kgf·m, 13 lbf·ft)

Check the parking brake lock operation (page 3-20).

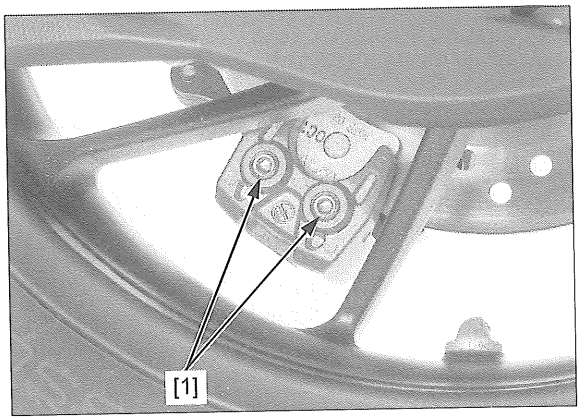

BRAKE DISC INSPECTION

Visually inspect the brake discs for damage or cracks.

Measure the brake disc according to HYDRAULIC BRAKE SPECIFICATIONS (page 1-8)and replace if necessary.

FRONT MASTER CYLINDER

REMOVAL/INSTALLATION

Drain the brake fluid from the hydraulic system (page 18-5).

Remove the handle rear cover (page 2-9).

Disconnect the brake light switch connectors [1].

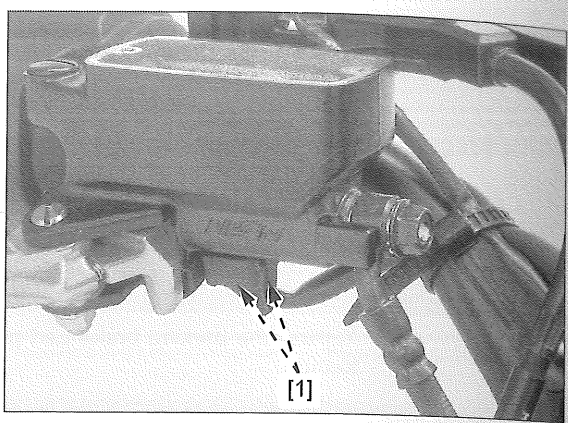

Remove the brake hose oil bolt [1], sealing washers [2], and brake hose [3].

Remove the holder bolts [4], holder [5], and master cylinder [6].

Installation is in the reverse order of removal.

NOTE:

- Always replace the sealing washers with new ones.
- Install the brake hose joint against the stopper.
- Align the end of the master cylinder with the handlebar mark.
- Tighten the upper holder bolt first then tighten the lower holder bolt.

TORQUE:

Master cylinder holder bolt:
12 N·m (1.2 kgf·m, 9 lbf·ft)

Brake hose oil bolt:
34 N·m (3.5 kgf·m, 25 lbf·ft)

Fill the reservoir to the upper level and bleed the front brake system (page 18-6).

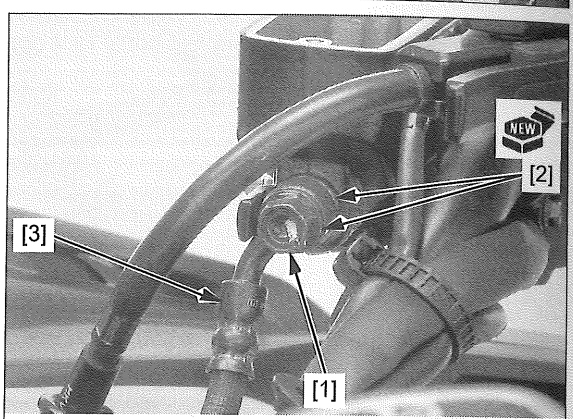

DISASSEMBLY/ASSEMBLY

NOTE:

- Install the snap ring with the chamfered edge facing the thrust load side and be certain it is firmly seated in the groove. Do not reuse the snap ring which could easily spin in the groove.
- Replace the piston and cups as a set.
- Do not allow the piston cup lips to turn inside out.
- Align the switch boss with the master cylinder hole properly.

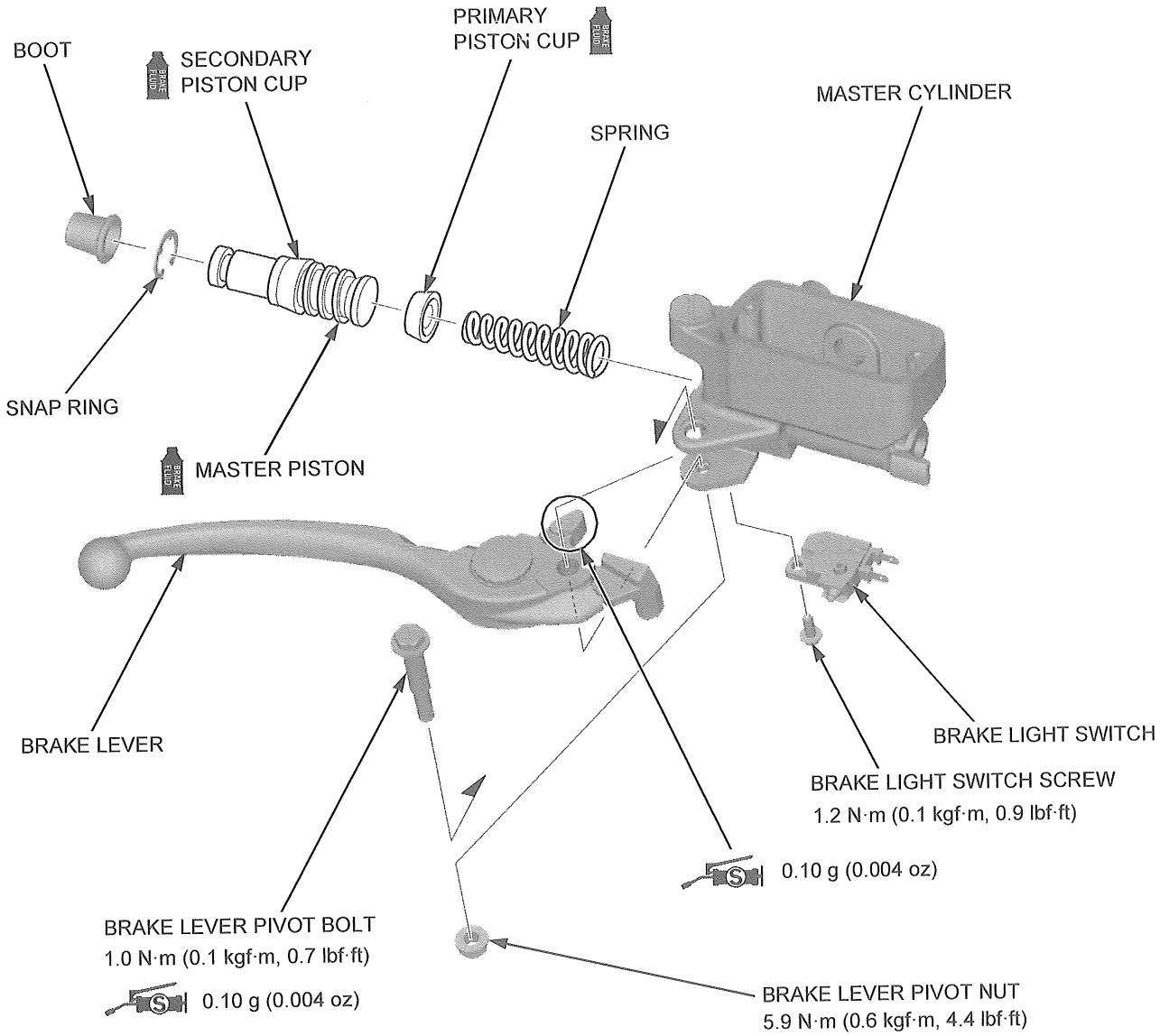

INSPECTION

Inspect the following parts for scoring, scratches, deterioration, or damage.

- Master cylinder
- Master piston
- Piston cups
- Spring
- Boot

Measure each part according to HYDRAULIC BRAKE SPECIFICATIONS (page 1-8).

Replace any part if it is out of service limit.

REAR MASTER CYLINDER

REMOVAL/INSTALLATION

Drain the brake fluid from the hydraulic system (page 18-5).

Remove the handle rear cover (page 2-9).

Disconnect the brake light switch connectors [1].

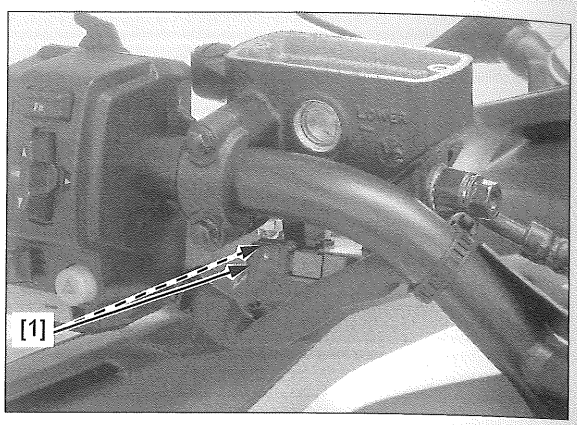

Remove the brake hose oil bolt [1], sealing washers [2], and brake hose [3].

Remove the holder bolts [4], holder [5], and master cylinder [6].

Installation is in the reverse order of removal.

NOTE:

- Always replace the sealing washers with new ones.
- Install the brake hose joint against the stopper.
- Install the holder with the "UP" mark [7] facing up.
- Align the end of the master cylinder with the handlebar mark.
- Tighten the upper holder bolt first then tighten the lower holder bolt.

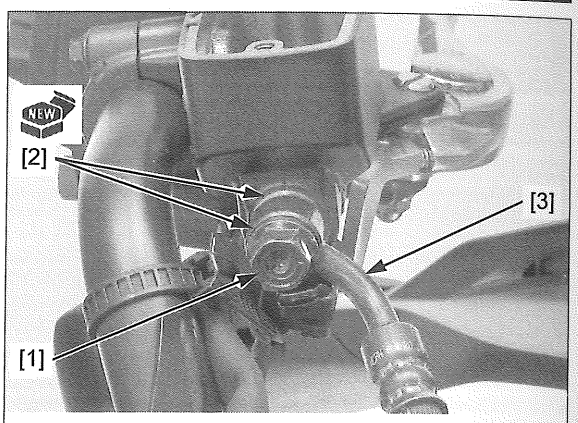

TORQUE:

Master cylinder holder bolt:
12 N·m (1.2 kgf·m, 9 lbf·ft)

Brake hose oil bolt:
34 N·m (3.5 kgf·m, 25 lbf·ft)

Fill the reservoir to the upper level and bleed the rear brake system (page 18-6).

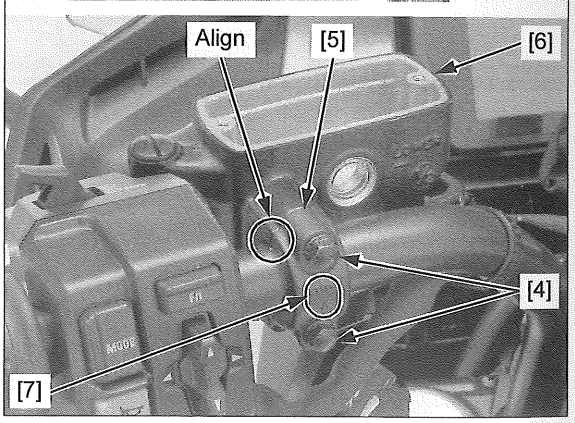

DISASSEMBLY/ASSEMBLY

NOTE:

- Install the snap ring with the chamfered edge facing the thrust load side and be certain it is firmly seated in the groove. Do not reuse the snap ring which could easily spin in the groove.
- Replace the piston and cups as a set.
- Do not allow the piston cup lips to turn inside out.
- Align the switch boss with the master cylinder hole properly.

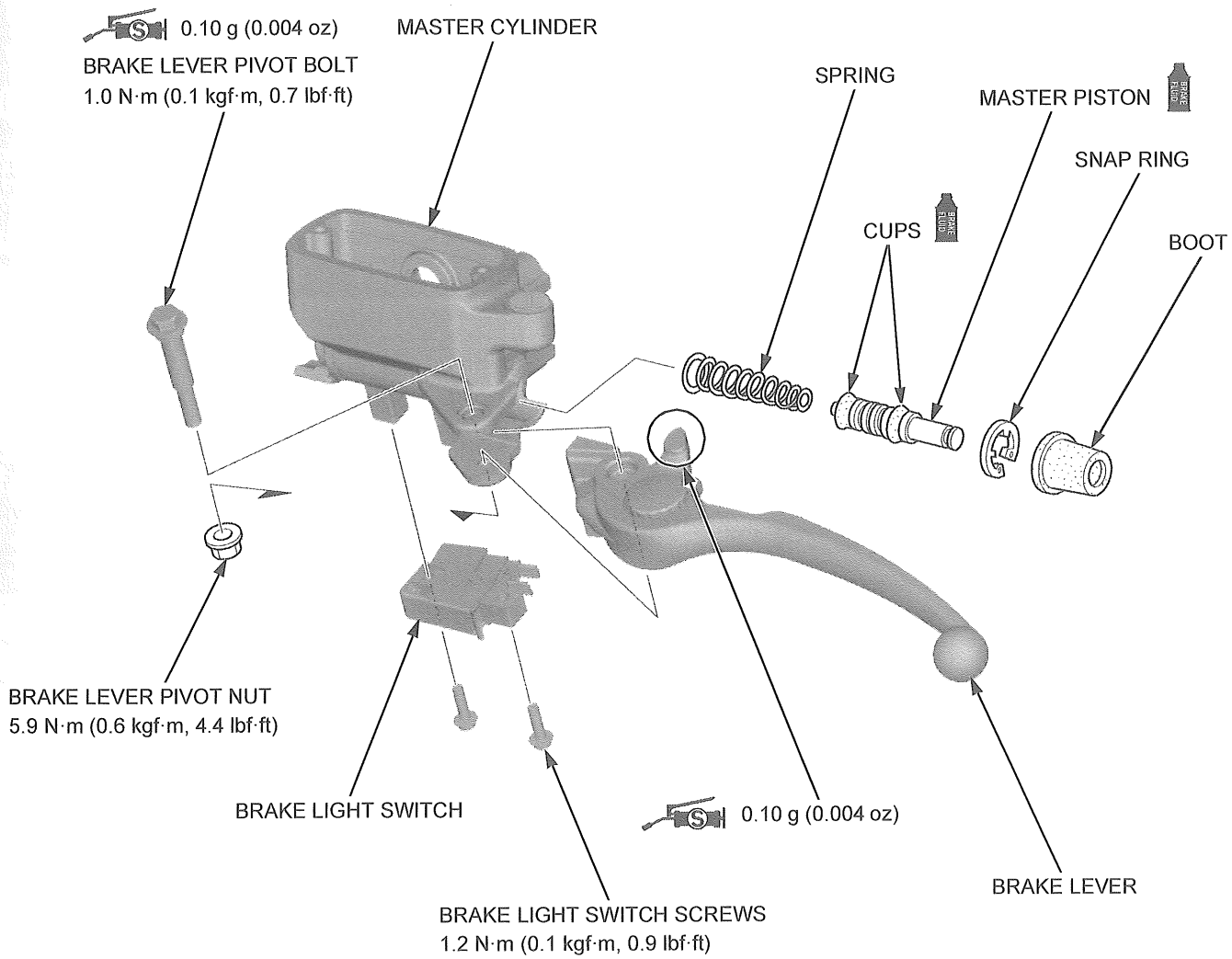

INSPECTION

Inspect the following parts for scoring, scratches, deterioration, or damage.

- Master cylinder
- Master piston
- Piston cups
- Spring
- Boot

Measure each part according to HYDRAULIC BRAKE SPECIFICATIONS (page 1-8).

Replace any part if it is out of service limit.

FRONT BRAKE CALIPER

REMOVAL/INSTALLATION

NOTE:

- When removing the oil bolt, cover the end of brake hose to prevent contamination.
- Do not suspend the brake caliper from the brake hose. Do not twist the brake hose.
- Do not operate the brake lever after removing the brake caliper.

Drain the brake fluid from the hydraulic system (page 18-5).

Remove the brake hose oil bolt [1], sealing washers [2], and brake hose [3].

Remove the brake caliper mounting bolts [4] and brake calipers [5].

Installation is in the reverse order of removal.

NOTE:

- Always replace the brake caliper mounting bolts and sealing washers with new ones.
- Be sure to rest the eyelet stopper pin against the caliper body.
- Route the hose and wire properly (page 1-20).
- Do not damage the speed sensor wire when installing the brake caliper.

TORQUE:

Front brake caliper mounting bolt:
45 N·m (4.6 kgf·m, 33 lbf·ft)

Brake hose oil bolt:
34 N·m (3.5 kgf·m, 25 lbf·ft)

Fill the reservoir to the upper level and bleed the front brake system (page 18-6).

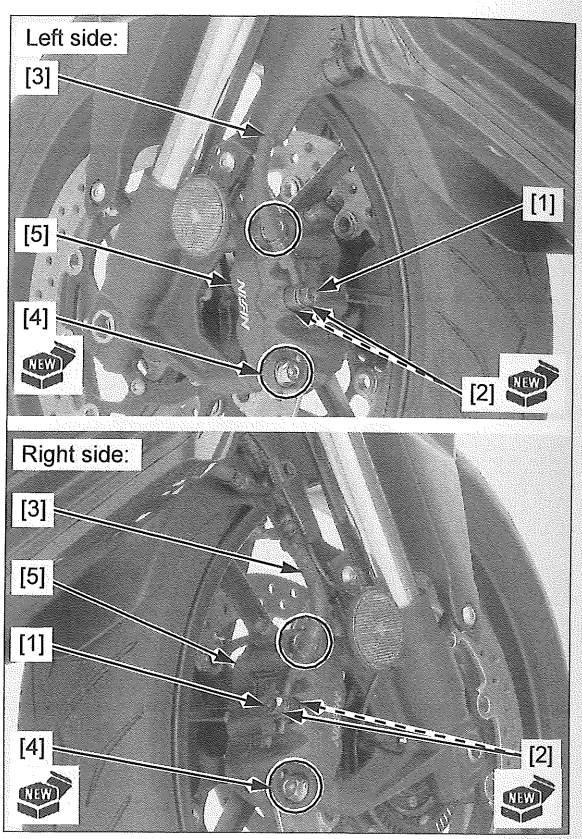

DISASSEMBLY/ASSEMBLY

NOTE:

- Be careful not to damage each piston.
- When removing the caliper pistons with compressed air, place a shop towel over the piston to prevent damaging the piston and caliper body. Do not use high pressure or bring the nozzle too close to the fluid inlet.
- Mark the pistons to ensure correct reassembly.
- Be careful not to damage the piston sliding surface.
- Install each caliper piston in their proper locations.
  - Piston A: larger O.D.
  - Piston B: smaller O.D.
- Do not disassemble the caliper bodies unless necessary.

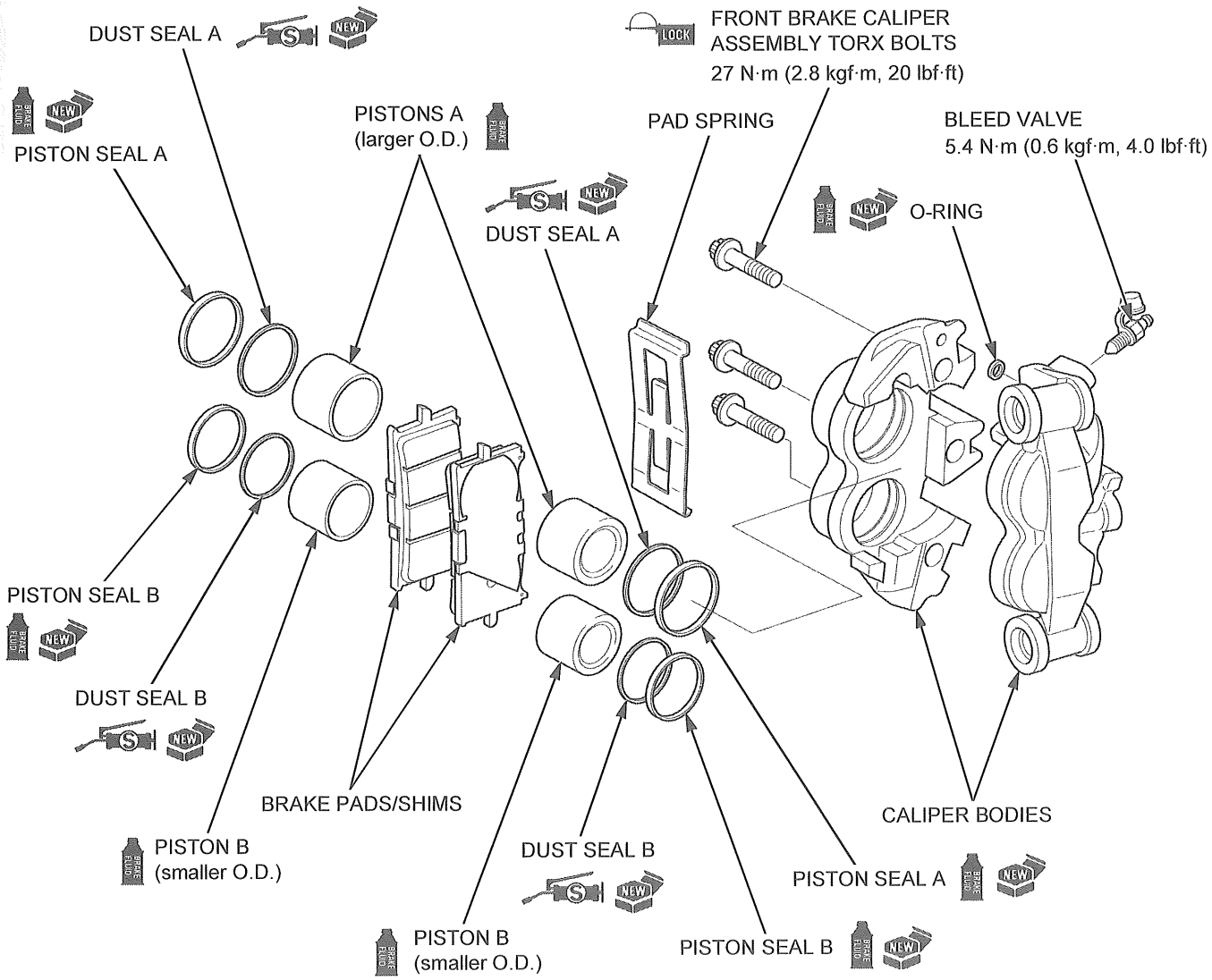

INSPECTION

Check the following parts for scoring, scratches, deterioration, or damage.

- Caliper cylinders
- Caliper pistons

Measure the parts according to HYDRAULIC BRAKE SPECIFICATIONS (page 1-8).

Replace any part if it is out of service limit.

REAR BRAKE CALIPER

REMOVAL/INSTALLATION

NOTE:

- When removing the oil bolt, cover the end of brake hose to prevent contamination.
- Do not suspend the brake caliper from the brake hose. Do not twist the brake hose.
- Do not operate the brake lever after removing the brake caliper.

Drain the brake fluid from the rear brake hydraulic system (page 18-5).

Remove the brake hose oil bolt [1], sealing washers [2], and brake hose [3].

Remove the caliper pin [4] and caliper mounting bolt [5].

Remove the rear brake caliper [6] from the caliper bracket [7].

Installation is in the reverse order of removal.

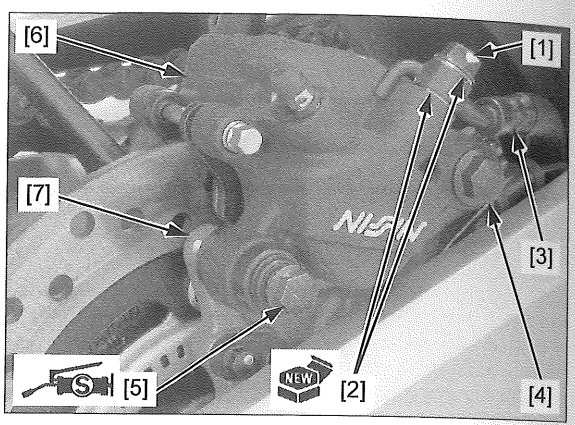

NOTE:

- Check the sleeve and caliper pin boots for deterioration or damage, replace them if necessary (page 18-19).
- Apply 0.4 g (0.01 oz) of silicone grease to the sliding area of the caliper pin bolt and caliper mounting bolt.
- Always replace the sealing washers with new ones.
- Be sure to rest the eyelet stopper pin against the caliper body when tightening the oil bolt.

TORQUE:

Brake hose oil bolt:
34 N·m (3.5 kgf·m, 25 lbf·ft)

Rear brake caliper mounting bolt:
22 N·m (2.2 kgf·m, 16 lbf·ft)

Rear brake caliper pin:
27 N·m (2.8 kgf·m, 20 lbf·ft)

Fill and bleed the rear brake hydraulic system (page 18-6).

DISASSEMBLY/ASSEMBLY

NOTE:

- Be careful not to damage the piston sliding surface.
- When removing the caliper piston with compressed air, place a shop towel over the piston to prevent damaging the piston and caliper body. Do not use high pressure or bring the nozzle too close to the fluid inlet.
- Install the piston with the opening toward the pads.
- Apply 0.4 g (0.01 oz) of silicone grease to the sliding area of the caliper sleeve.

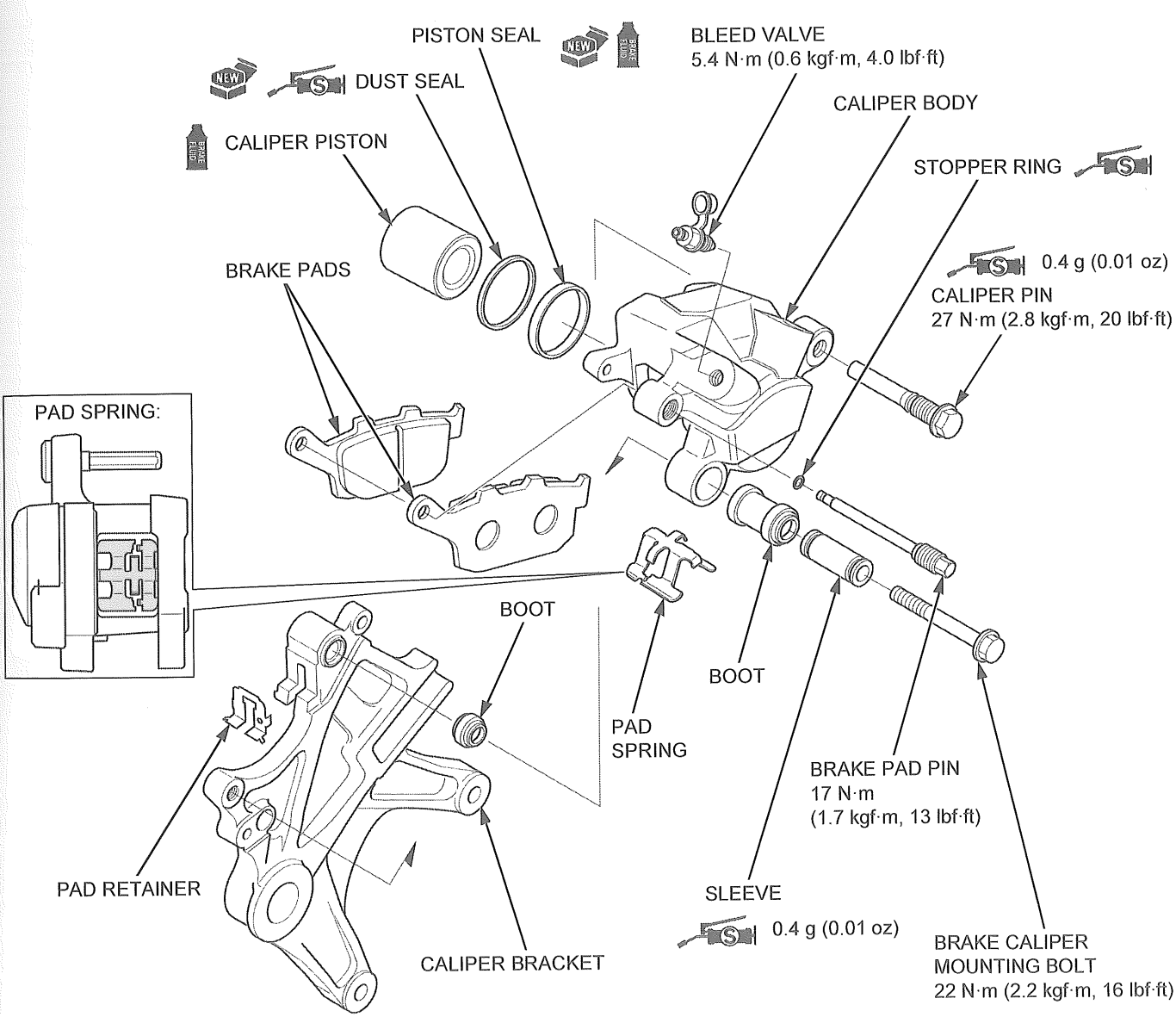

INSPECTION

Check the following parts for scoring, scratches, deterioration, or damage.

- Caliper cylinder
- Caliper piston

Measure the parts according to HYDRAULIC BRAKE SPECIFICATIONS (page 1-8)and replace if necessary.

PARKING BRAKE CALIPER

REMOVAL/INSTALLATION

Remove the bolts [1].

Release the cap boot [2] and remove the parking brake cable [3] from cable stay [4] of the caliper body.

Disconnect the parking brake cable end from the brake arm [5].

Installation is in the reverse order of removal.

Check the parking brake lock operation (page 3-20).

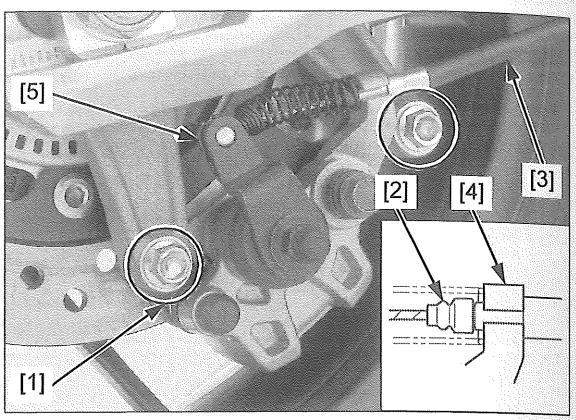

DISASSEMBLY/ASSEMBLY

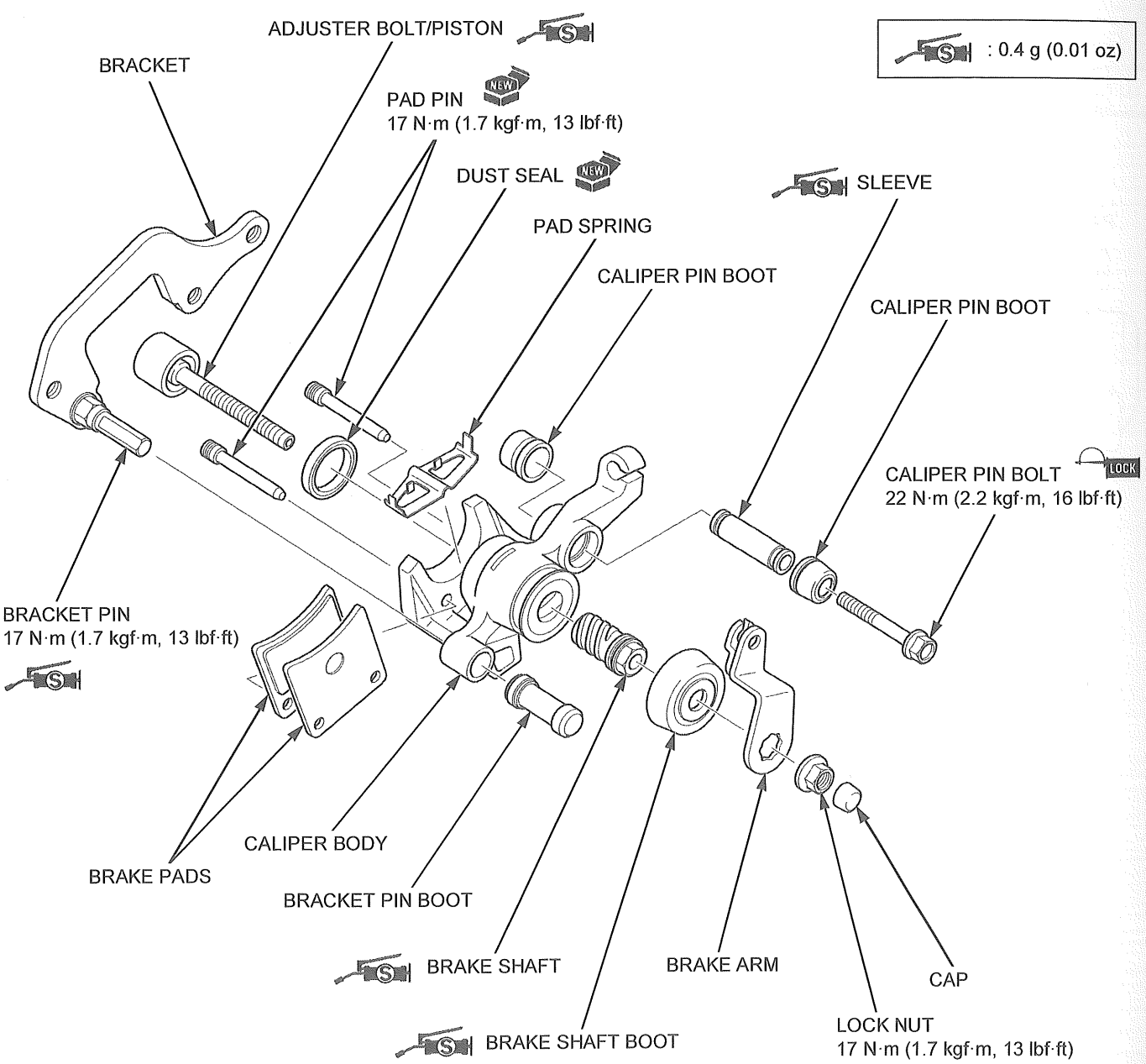

NOTE:

- Apply 0.4 g (0.01 oz) minimum of silicone grease to the outer surface of the brake shaft [1].
- Position the brake shaft so that the punch mark [2] is between the index lines [3] (installation range), and screw the shaft into the caliper.
- Make sure that the punch mark is positioned between the index lines with the shaft fully installed.

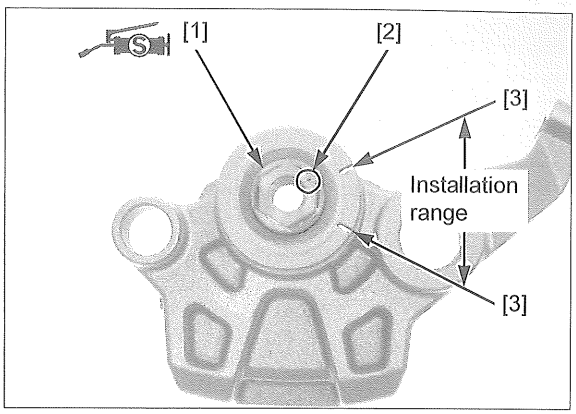

- Install the brake arm [1] by aligning the punch marks.

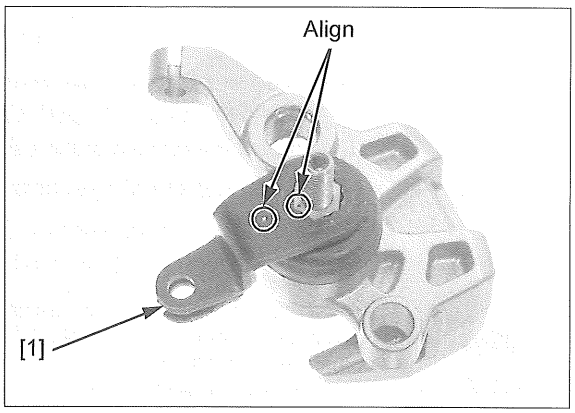

INSPECTION

Inspect the following parts for scoring, scratches, or damage and replace if necessary.

– Caliper cylinder
– Caliper piston

PARKING BRAKE LEVER

REMOVAL/INSTALLATION

Remove the socket bolts [1] and cover [2].

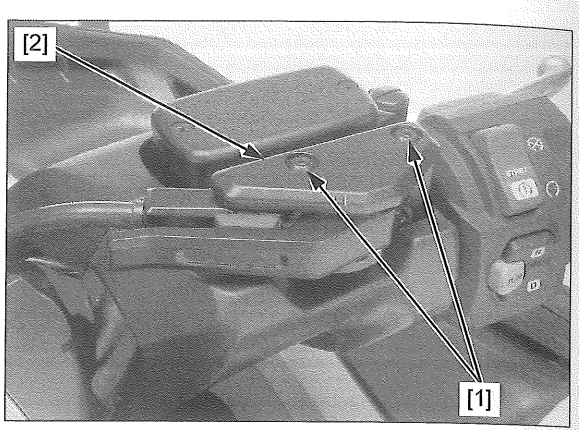

Remove the parking brake lever [1], washers [2] and holder rubbers [3].

Disconnect the parking brake cable [4].

Installation is in the reverse order of removal.

TORQUE: 4.2 N·m (0.4 kgf·m, 3.1 lbf·ft)

NOTE:

- Apply 0.2 g (0.01 oz) minimum of grease to the parking brake lever pivot and washer sliding surface.
- After installation, check the parking brake lock operation (page 3-20).

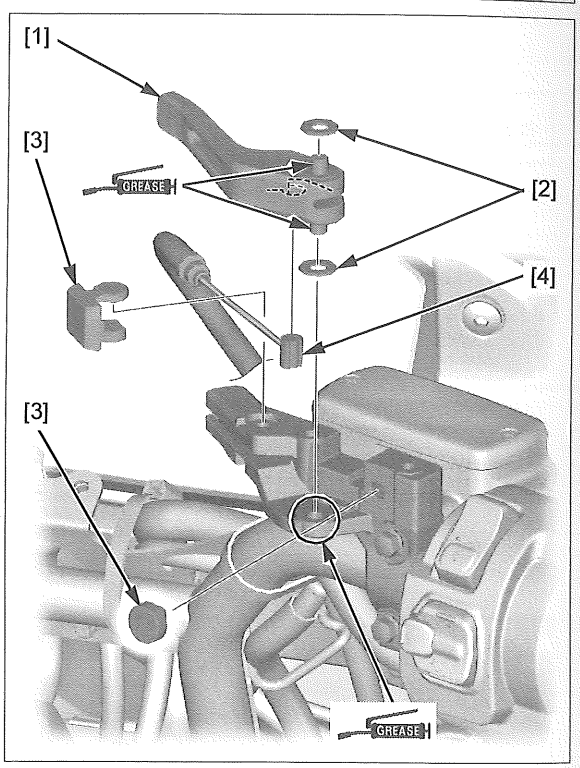

19. ANTI-LOCK BRAKE SYSTEM (ABS)

SERVICE INFORMATION 19-2

ABS SYSTEM LOCATION 19-3

ABS SYSTEM DIAGRAM 19-4

ABS TROUBLESHOOTING INFORMATION 19-5

DTC INDEX 19-9

ABS INDICATOR CIRCUIT TROUBLESHOOTING 19-11

ABS TROUBLESHOOTING 19-13

WHEEL SPEED SENSOR 19-22

ABS MODULATOR 19-25

ABS FUSE 19-26

SERVICE INFORMATION

GENERAL

NOTICE

- *The ABS modulator may be damaged if dropped. Also if a connector is disconnected when current is flowing, the excessive voltage may damage the control unit. Always turn off the ignition switch before servicing.*
- *Spilling brake fluid will severely damage plastic parts and painted surfaces. It is also harmful to some rubber parts.*

- The ABS control unit is integrated in the ABS modulator. Do not disassemble the ABS modulator. Replace the ABS modulator as an assembly when the it is faulty.
- The ABS control unit performs pre-start self-diagnosis to check whether the ABS functions normally until the vehicle speed reaches 10 km/h (6 mph). After pre-start self-diagnosis, the ABS control unit monitors the ABS functions and vehicle running condition constantly until the ignition switch is turned OFF (ordinary self-diagnosis).
- When the ABS control unit detects a problem, it stops the ABS function, switches back to the conventional brake operation, and turns on or blinks the ABS indicator. Take care during the test-ride.
- Read "ABS TROUBLESHOOTING INFORMATION" carefully, inspect and troubleshoot the ABS according to the diagnostic troubleshooting flow chart. Observe each step of the procedures one by one. Write down the DTC and probable faulty part before starting diagnosis and troubleshooting.
- Use a fully charged battery. Do not diagnose with a charger connected to the battery.
- After troubleshooting, erase the DTC and test-ride the motorcycle to check that the ABS indicator operates normally during pre-start self-diagnosis (page 19-5).
- Troubles not resulting from a faulty ABS (e.g. brake disc squeak, unevenly worn brake pad) cannot be recognized by the ABS diagnosis system.
- Before wheel speed sensor servicing, check the following:
  - Iron or other magnetic deposits between the pulser ring and wheel speed sensor
  - Pulser ring slots for obstructions
  - Installation condition of the pulser ring or wheel speed sensor for looseness
  - Pulser ring and sensor tip for deformation or damage
- Be careful not to damage the wheel speed sensor and pulser ring when removing and installing the wheel.
- For pulser ring service:
  - Front pulser ring (page 16-13)
  - Rear pulser ring (page 17-5)
- The following color codes are used throughout this section.

Be = Beige	Bl = Black	Bu = Blue	Br = Brown	G = Green	P = Pink
R = Red	V = Violet	W = White	Y = Yellow		

ABS SYSTEM LOCATION

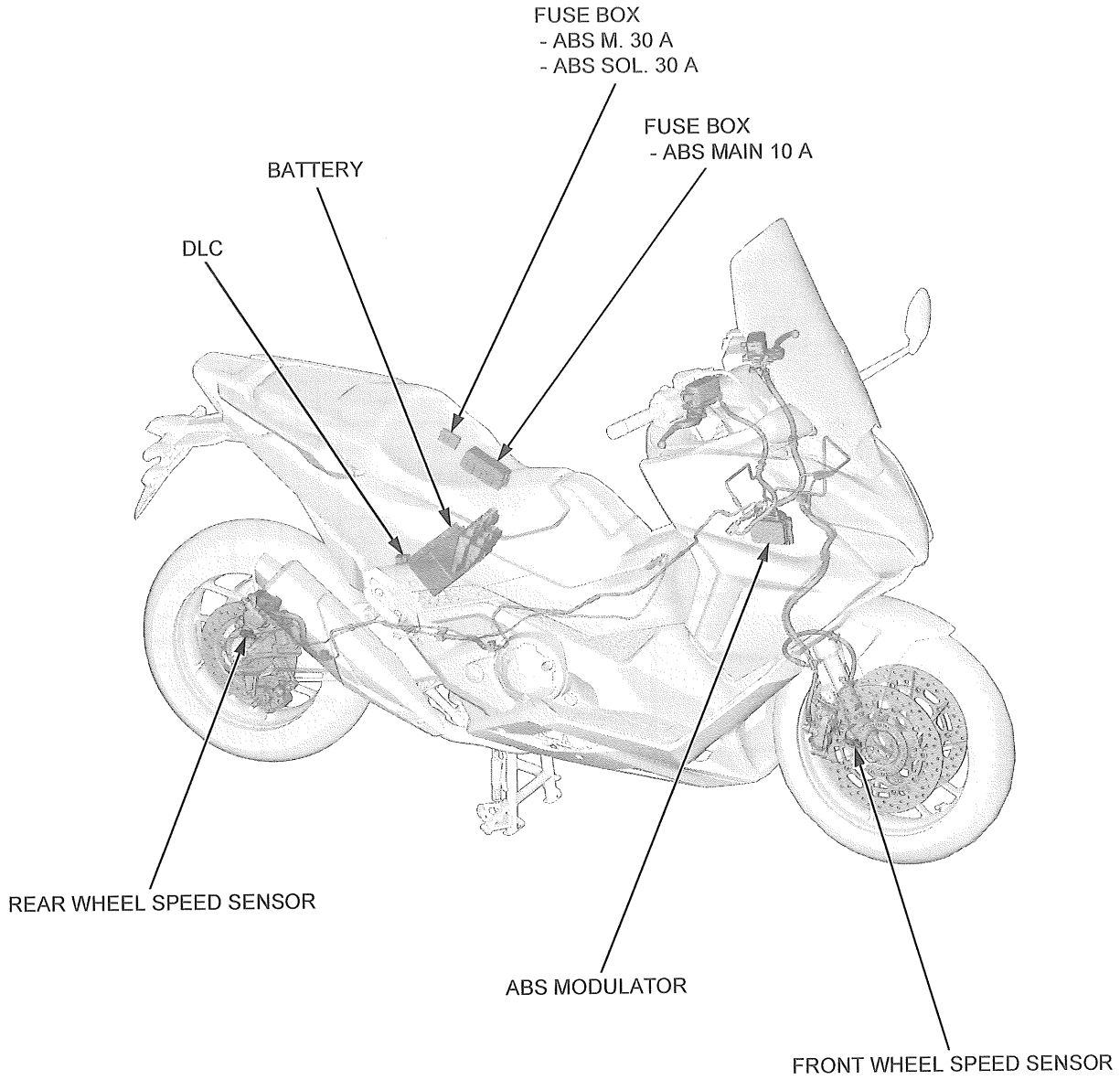

ABS SYSTEM DIAGRAM

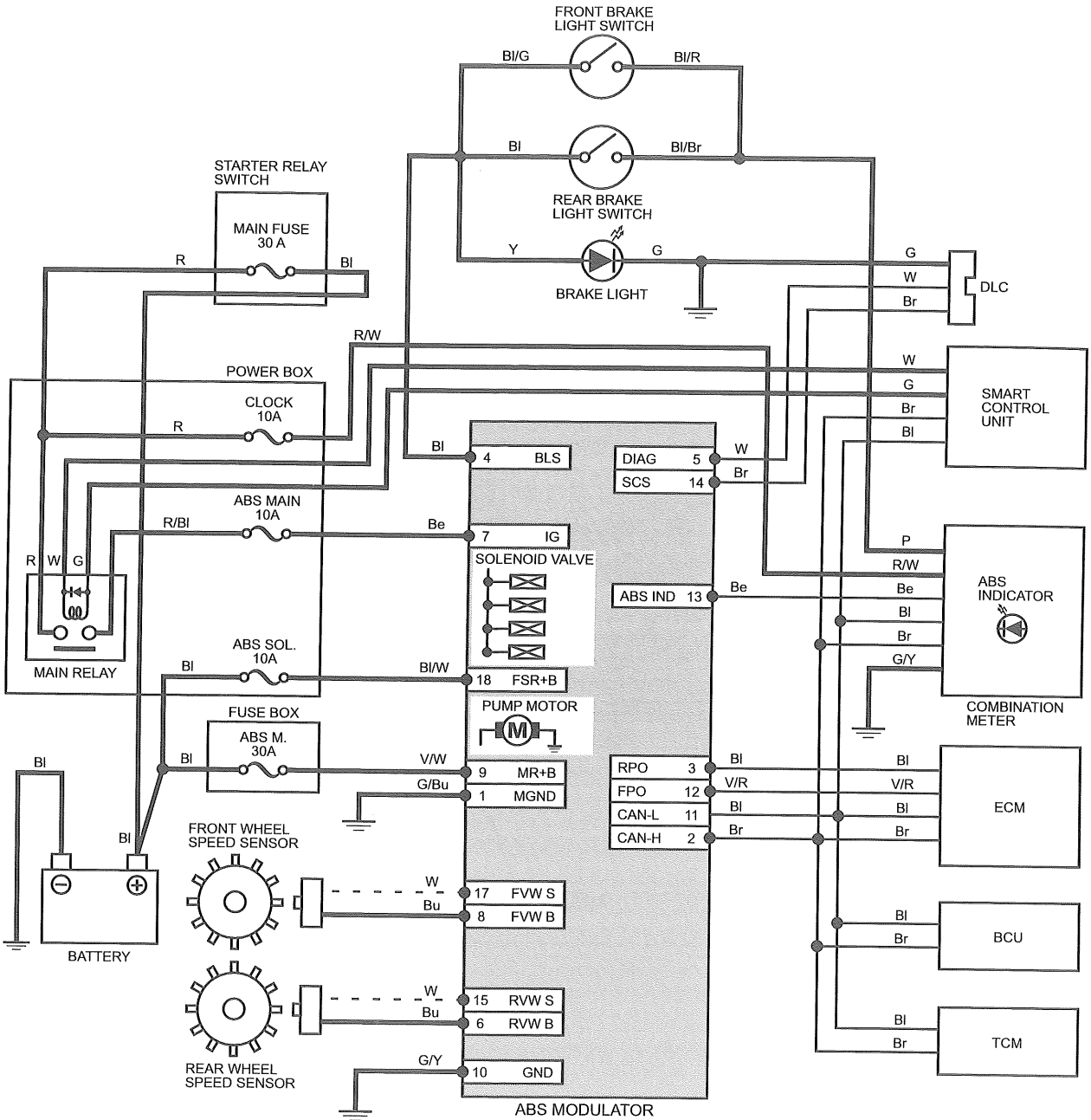

ABS TROUBLESHOOTING INFORMATION

SYSTEM DESCRIPTION

SUMMARY OF ABS PRE-START SELF-DIAGNOSIS SYSTEM

The ABS pre-start self-diagnosis system diagnoses the electrical system as well as the operating status of the modulator. When there is any abnormality, the problem and the associated part can be detected by reading the DTC.

When the motorcycle is running, pulse signals generated at the front and rear wheel speed sensors are sent to the ABS control unit. When the vehicle speed reaches approximately 6 km/h (4 mph), the ABS control unit operates the pump motor to check it. When the vehicle speed reaches 10 km/h (6 mph), the ABS control unit turns off the ABS indicator if the system is normal and the pre-start self-diagnosis is completed.

If any problem is detected, the ABS indicator brinks or comes on and stays on to notify the rider of the problem.
The ordinary self-diagnosis is also made while the motorcycle is running after the pre-start diagnosis is completed. When the ABS indicator brinks or stays on, the cause of the problem can be identified by retrieving the DTC (page 19-6).

If the ABS indicator does not come on when the ignition switch is turned ON, or the ABS indicator stays on after the pre-start self-diagnosis is completed although the ABS is normal, the ABS indicator circuit may be faulty. Follow the troubleshooting (page 19-11).

Pre-start serf-diagnosis when the system is normal:

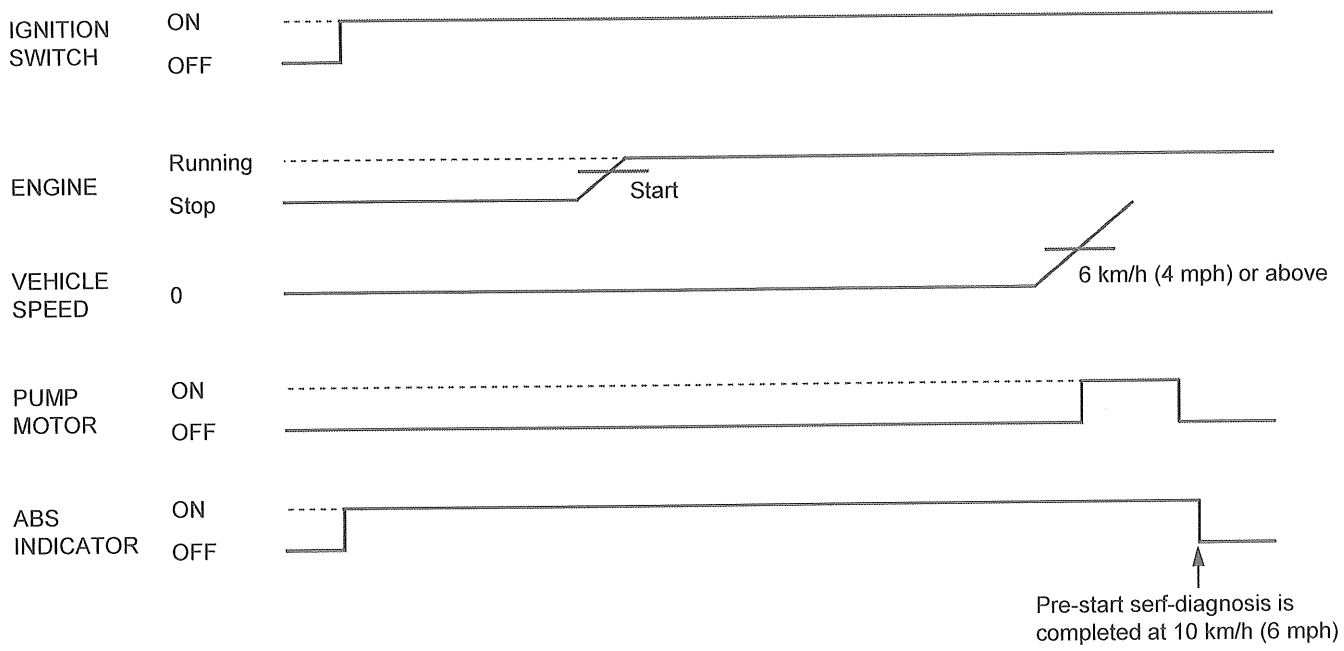

PRE-START SELF-DIAGNOSIS PROCEDURE (Daily check)

1. Turn the ignition switch ON.
2. Make sure the ABS indicator comes on.
3. Start the engine.
4. Ride the motorcycle and increase the vehicle speed to approximately 10 km/h (6 mph).
5. The ABS is normal if the ABS indicator goes off.

MCS INFORMATION

Refer to the PGM-FI system (page 4-6).

DTC READOUT

NOTE:

- The DTC is not erased by turning the ignition switch to OFF while the DTC is being output. Note that turning the ignition switch ON again does not indicate the DTC. To show the DTC again, repeat the DTC readout procedures from the beginning.
- Be sure to record the indicated DTC(s).
- After diagnostic troubleshooting, erase the DTC and perform the pre-start self-diagnosis procedure to be sure that there is no problem in the ABS (page 19-5).
- Do not apply the brake during DTC readout.

Connect the MCS to the DLC (page 4-6).

Read the DTC, stored data and follow the DTC index (page 19-9).

- If the MCS is not available, perform the following.

Reading DTC with the ABS indicator

1. Connect the SCS short connector to the DLC (page 4-6).
2. Turn the ignition switch ON.

   The ABS indicator should come on for 2 seconds (start signal), then goes off for 3.6 seconds and starts DTC indication.

   The DTC is indicated by the number of the times of the ABS indicator blinking.

   If the DTC is not stored, the ABS indicator stays on.
3. Turn the ignition switch OFF and disconnect the SCS short connector.

   Install the removed parts in the reverse order of removal.

DTC INDICATION PATTERN

NOTE:

- The ABS indicator indicates the DTC by blinking a specified number of times.
  The indicator has two types of blinking, a long blink and short blink. The long blink lasts for 1.3 seconds, the short blink lasts for 0.3 seconds. For example, when one long blink is followed by two short blinks, the DTC is 1-2 (one long blink = 1 blink, plus two short blinks = 2 blinks).
- When the ABS control unit stores some DTCs, the ABS indicator shows the DTCs in the order from the lowest number to highest number. For example, when the ABS indicator indicates code 1-2, then indicates code 2-3, two failures have occurred.

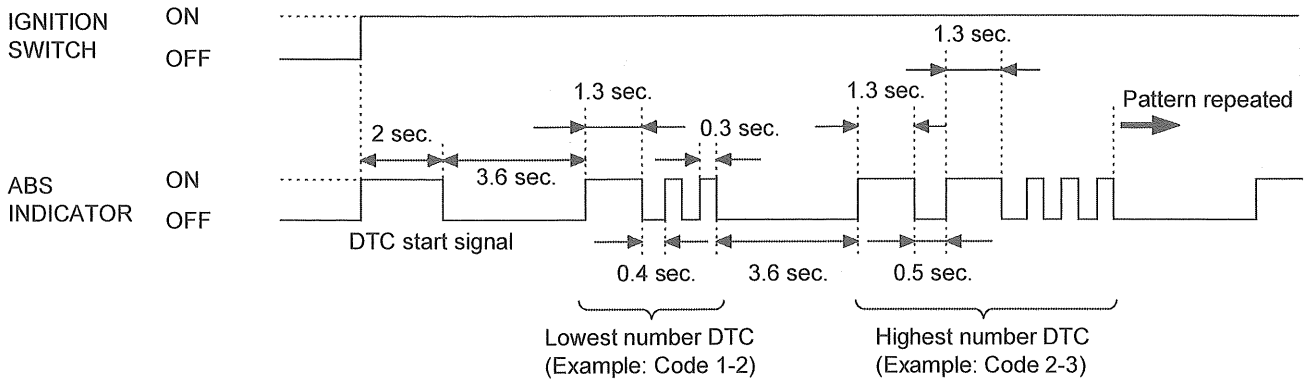

When the DTC is not stored:

Reading current DTC with the combination meter

Refer to the PGM-FI system (page 4-6).

Read the current DTC(s) and follow the DTC index (page 19-9).

Reading stored DTC with the combination meter

Refer to the PGM-FI system (page 4-6).

Read the stored DTC(s) and follow the DTC index (page 19-9).

ERASING STORED DTC

NOTE:

- The stored DTC can not be erased by simply disconnecting the battery negative (–) cable.

Connect the MCS to the DLC (page 4-6).

Erase the DTC with the MCS while the engine is stopped.

To erase the DTC without MCS, refer to the following procedure.

How to erase the DTC without MCS

1. Connect the SCS short connector to the DLC (page 4-6).
2. Turn the ignition switch ON while squeezing either brake lever. The ABS indicator should come on for 2 seconds and go off.
3. Release the brake lever immediately after the ABS indicator goes off. The ABS indicator should come on.
4. Squeeze the brake lever immediately after the ABS indicator comes on. The ABS indicator should go off.
5. Release the brake lever immediately after the ABS indicator goes off.

   When the DTC is erased, the ABS indicator blinks 2 times and stays on.

   If the ABS indicator does not blink 2 times, the self-diagnostic memory has not been erased, so try again.
6. Turn the ignition switch OFF and disconnect the SCS short connector.

   Install the removed parts in the reverse order of removal.

CIRCUIT INSPECTION

INSPECTION AT ABS MODULATOR CONNECTOR

Remove the left front side cowl (page 2-15).

Turn the ignition switch OFF.

Disconnecting procedure:

Turn the lock lever [1] to this side while pressing the lock tab [2] to release it.

Be sure the lock lever is turned all the way and disconnect the ABS modulator 18P (Black) connector [3].

Connecting procedure:

Be sure to seat the lock lever against the wire side of the connector fully. Connect the ABS modulator 18P (Black) connector by pressing it straight at the area as shown (arrow) until the lock tab clicks.

Make sure the connector is locked securely.

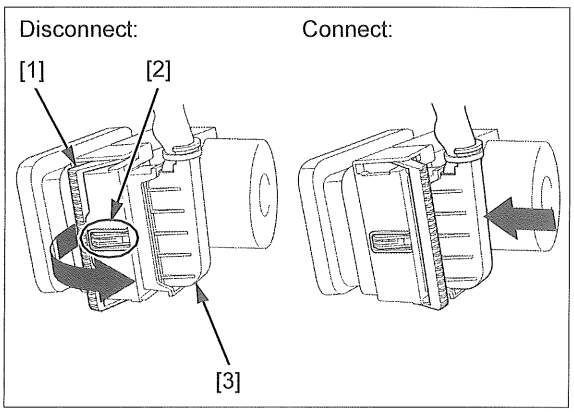

- Always clean around and keep any foreign material away from the connector before disconnecting it.
- A faulty ABS is often related to poorly connected or corroded connections. Check those connections before proceeding.
- In testing at ABS modulator 18P (Black) connector terminals (wire harness side; except No. 9 and No. 18 terminals), always use the test probe [1]. Insert the test probe into the connector terminal, then connect the digital multimeter probe to the test probe.

TOOL:

Test probe	**07ZAJ-RDJA110**

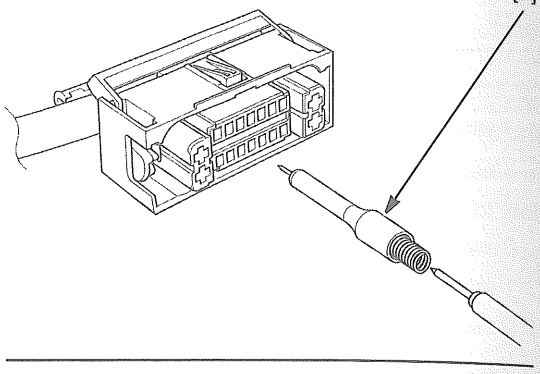

TERMINAL LAYOUT:

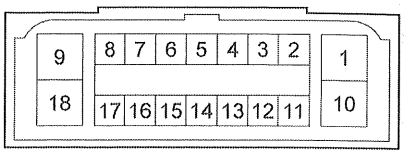

(Terminal side of the wire harness)

DTC INDEX

NOTE:

- The ABS indicator might blink in the following cases. Correct the faulty part.
  - Incorrect tire pressure.
  - Tires not recommended for the motorcycle were installed (incorrect tire size).
  - Deformation of the wheel or tire.
- The ABS indicator might blink while riding under the following conditions. This is temporary failure. Be sure to erase the DTC (page 19-7).
  Then, test-ride the motorcycle above 10 km/h (6 mph) and check the DTC (page 19-6). Ask the rider for the riding conditions in detail when the motorcycle is brought in for inspection.
  - The motorcycle has continuously run bumpy roads.
  - The front wheel leaves the ground for a long time when riding (wheelie).
  - Only either the front or rear wheel rotates.
  - The ABS operates continuously.
  - The ABS control unit has been disrupted by an extremely powerful radio wave (electromagnetic interference).

DTC	Function failure	Detection		Symptom/Fail-safe function	Refer to
		A	B		
–	ABS indicator malfunction • ABS modulator voltage input line • Indicator related wires • Combination meter • ABS modulator • Sub fuse ABS MAIN 10 A			• ABS indicator never comes ON at all	19-11
				• ABS indicator stays ON at all	19-11
1-1	Front wheel speed sensor circuit malfunction • Wheel speed sensor or related wires	O	O	• Stops ABS operation	19-13
1-2	Front wheel speed sensor malfunction • Wheel speed sensor, pulser ring or related wires • Electromagnetic interference		O	• Stops ABS operation	19-13
1-3	Rear wheel speed sensor circuit malfunction • Wheel speed sensor or related wires	O	O	• Stops ABS operation	19-15
1-4	Rear wheel speed sensor malfunction • Wheel speed sensor, pulser ring or related wires • Electromagnetic interference		O	• Stops ABS operation	19-15
2-1	Front pulser ring • Pulser ring or related wires		O	• Stops ABS operation	19-13
2-3	Rear pulser ring • Pulser ring or related wires		O	• Stops ABS operation	19-15
3-1 3-2 3-3 3-4	Solenoid valve malfunction (ABS modulator) • Fail safe relay (ABS modulator) or related wires • Solenoid valve (ABS modulator) • Sub fuse ABS SOL. 30 A	O	O	• Stops ABS operation	19-17
4-1	Front wheel lock • Riding condition		O	• Stops ABS operation	19-13
4-2	Front wheel lock (Wheelie) • Riding condition		O		
4-3	Rear wheel lock • Riding condition		O	• Stops ABS operation	19-15
5-1	Pump motor lock • Pump motor (ABS modulator) or related wires • Sub fuse ABS M. 30 A	O	O	• Stops ABS operation	19-17
5-2	Motor stuck off • Pump motor (ABS modulator) or related wires • Sub fuse ABS M. 30 A	O	O	• Stops ABS operation	
5-3	Motor stuck on • Pump motor (ABS modulator) or related wires	O	O	• Stops ABS operation	
5-4	Fail safe relay malfunction • Fail safe relay (ABS modulator) or related wires • Sub fuse ABS SOL. 30 A	O	O	• Stops ABS operation	19-19

DTC	Function failure	Detection		Symptom/Fail-safe function	Refer to
		A	B		
6-1	Power circuit under voltage • Sub fuse ABS MAIN 10 A • Sub fuse ABS M. 30 A • Input voltage (too low)	O	O	• Stops ABS operation	19-20
6-2	Power circuit over voltage • Input voltage (too high)	O	O	• Stops ABS operation	
7-1	Tire malfunction • Tire size		O	• Stops ABS operation	19-21
8-1	ABS control unit • ABS control unit malfunction (ABS modulator)	O	O	• Stops ABS operation	19-21
8-6	CAN communication malfunction	O	O	• Stops ABS operation	19-21
8-7	CAN communication error	O	O	• ABS level does not change	19-22

(A) Pre-start self-diagnosis (page 19-5)

(B) Ordinary self-diagnosis: diagnoses while the motorcycle is running (after pre-start self-diagnosis)

ABS INDICATOR CIRCUIT TROUBLESHOOTING

ABS INDICATOR DOES NOT COME ON (when the ignition switch turned ON)

NOTE:

- Before starting this inspection, check the initial operation of the combination meter (page 21-7).

1. **Indicator Operation Inspection**

   Disconnect the ABS modulator 18P (Black) connector (page 19-7).

   Turn the ignition switch ON.

   Check the ABS indicator.

   Does the ABS indicator come on?

   YES – Faulty ABS modulator

   NO – GO TO STEP 2.

2. **Indicator Signal Line Short Circuit Inspection**

   Check for continuity between the wire harness side 18P (Black) connector [1] terminal and ground.

   TOOL:
   Test probe **07ZAJ-RDJA110**

   CONNECTION: 13 – Ground

   Is there continuity?

   YES – Short circuit in the Beige wire

   NO – Faulty combination meter

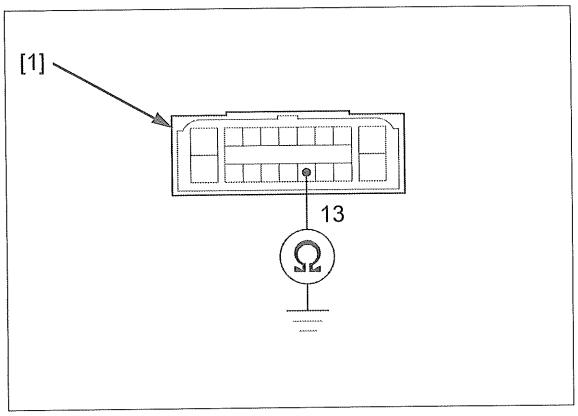

ABS INDICATOR STAYS ON (Indicator does not go off when the motorcycle is running, but DTC is not stored)

1. **Service Check Line Short Circuit Inspection**

   Disconnect the ABS modulator 18P (Black) connector (page 19-7).

   Check for continuity between the wire harness side 18P (Black) connector [1] terminal and ground.

   TOOL:
   Test probe **07ZAJ-RDJA110**

   CONNECTION: 14 – Ground

   Is there continuity?

   YES – Short circuit in the Brown wire

   NO – GO TO STEP 2.

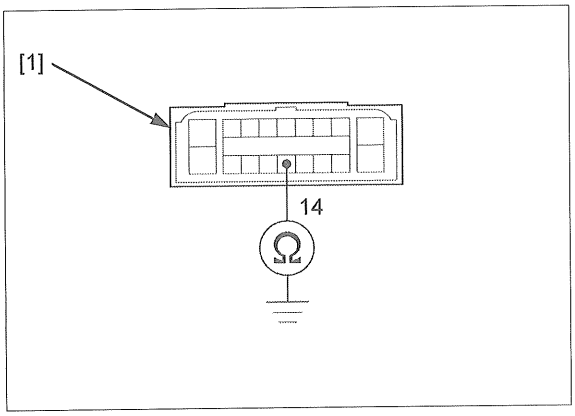

2. **Indicator Signal Line Open Circuit Inspection**

Short the wire harness side 18P (Black) connector [1] terminal to the ground with a jumper wire [2].

TOOL:
Test probe **07ZAJ-RDJA110**

CONNECTION: 13 – Ground

Turn the ignition switch ON.

Check the ABS indicator.

Does it go off?

YES – GO TO STEP 3.

NO – • Open circuit in the Beige wire
• Faulty combination meter (if the Beige wire is OK)

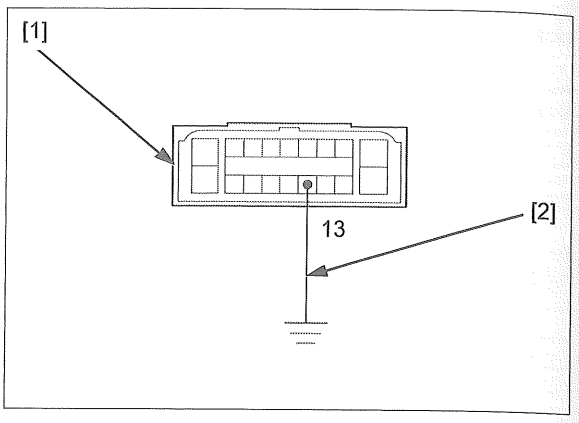

3. **Modulator Ground Line Open Circuit Inspection**

Turn the ignition switch OFF.

Check for continuity between the wire harness side 18P (Black) connector [1] terminal and ground.

CONNECTION: 10 – Ground

Is there continuity?

YES – GO TO STEP 4.

NO – Open circuit in the Green/yellow wire

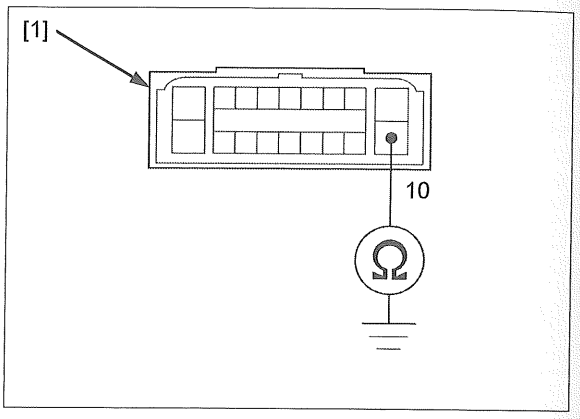

4. **Fuse Inspection**

Remove the fuse box cover (page 21-22)and check for a blown sub fuse ABS MAIN 10 A [1].

Is the fuse blown?

YES – GO TO STEP 5.

NO – GO TO STEP 6.

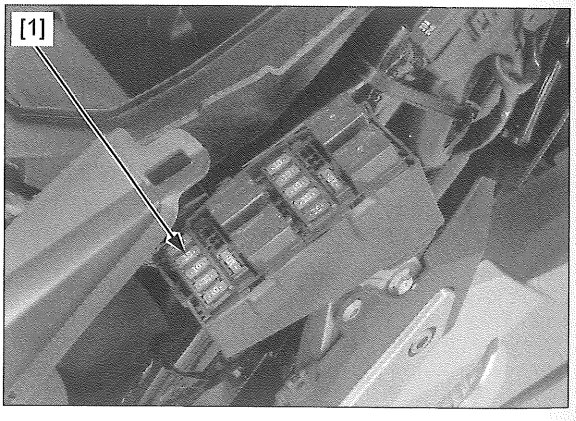

5. **Power Input Line Short Circuit Inspection**

With the sub fuse ABS MAIN 10 A removed, check for continuity between the wire harness side 18P (Black) connector [1] and ground.

TOOL:
Test probe **07ZAJ-RDJA110**

CONNECTION: 7 – Ground

Is there continuity?

YES – Short circuit in Beige wire

NO – Intermittent failure. Replace the sub fuse ABS MAIN 10 A with a new one and recheck.

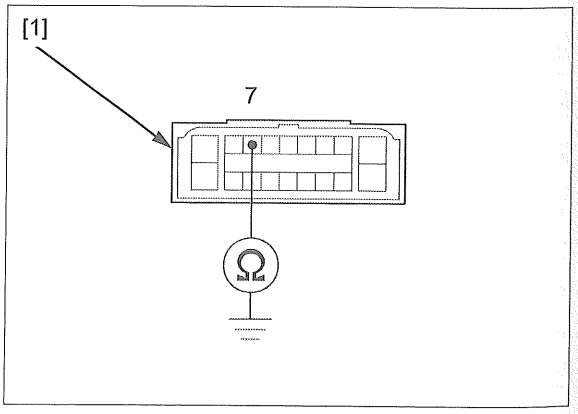

6. **Power Input Line Open Circuit Inspection**

Install the sub fuse ABS MAIN 10 A.

Turn the ignition switch ON.

Measure the voltage between the wire harness side ABS modulator 18P (Black) connector [1] terminal and ground.

TOOL:
Test probe **07ZAJ-RDJA110**

CONNECTION: 7 (+) – Ground (–)

Is there battery voltage?

YES – Faulty ABS modulator

NO – Open circuit in Beige wire

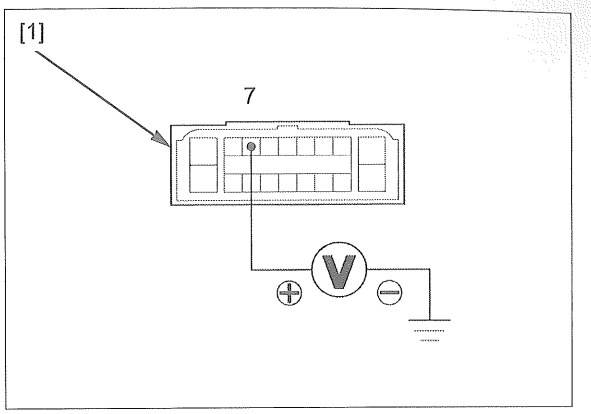

ABS TROUBLESHOOTING

NOTE:

- Perform inspection with the ignition switch OFF, unless otherwise specified.
- All connector diagrams in the troubleshooting are viewed from the terminal side.
- When the ABS modulator assembly is detected to be faulty, recheck the wire harness and connector connections closely before replacing it.
- After diagnostic troubleshooting, erase the DTC (page 19-7).
  Then test-ride the motorcycle to check that the ABS indicator operates normally during pre-start self-diagnosis (page 19-5).

DTC 1-1/1-2/2-1/4-1/4-2 (Front Wheel Speed Sensor Circuit/Front Wheel Speed Sensor/Front Pulser Ring/Front Wheel Lock)

NOTE:

- The ABS indicator might blink under unusual riding conditions (page 19-9). This is temporary failure.
  Erase the DTC (page 19-7).
  Then test-ride the motorcycle above 10 km/h (6 mph) to check that the ABS indicator operates normally (page 19-5).
- If DTC 4-1 is indicated, check the front brake for drag.

1. **Front Wheel Speed Sensor Clearance Gap Inspection**

Check the clearance gap between sensor bracket and pulser ring (page 19-22).

Is the clearance gap correct?

YES – GO TO STEP 2.

NO – Check the related parts for deformation and looseness, or damage and repair if necessary. Recheck the clearance gap.

2. **Front Wheel Speed Sensor Condition Inspection**

   Inspect the area around the front wheel speed sensor:

   Check that there is no iron or other magnetic deposits between the front pulser ring and front wheel speed sensor, and the front pulser ring slots for obstructions.

   Check the installation condition of the pulser ring or wheel speed sensor for looseness.

   Check the pulser ring and sensor tip for deformation or damage.

   Are the sensor and pulser ring in good condition?

   YES – GO TO STEP 3.

   NO – Remove any deposits. Install properly or replace faulty part.

3. **Front Wheel Speed Sensor Short Circuit Inspection**

   Turn the ignition switch OFF.

   Disconnect the front wheel speed sensor 2P (Black) connector (page 19-22).

   Check for continuity between each terminal of the sensor side 2P (Black) connector [1] and ground.

   CONNECTION: White – Ground
   Blue – Ground

   Is there continuity?

   YES – Faulty front wheel speed sensor

   NO – GO TO STEP 4.

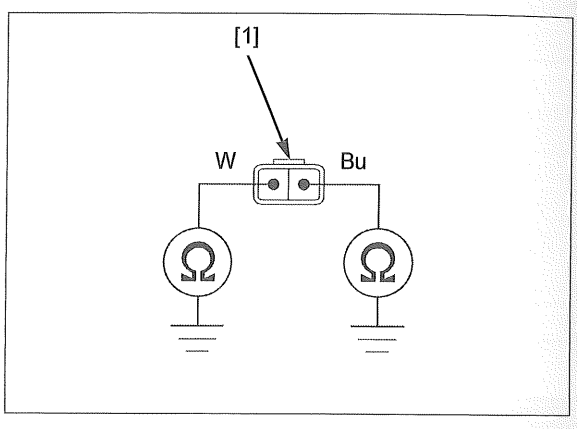

4. **Front Wheel Speed Sensor Line Short Circuit Inspection**

   Disconnect the ABS modulator 18P (Black) connector (page 19-7).

   Check for continuity between each terminal of the wire harness side 2P (Black) connector [1] and ground.

   CONNECTION: Blue – Ground
   White – Ground

   Is there continuity?

   YES – • Short circuit in the Blue wire
   • Short circuit in the White wire

   NO – GO TO STEP 5.

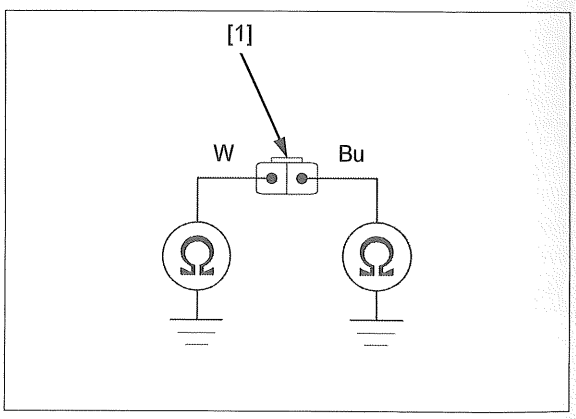

5. **Front Wheel Speed Sensor Line Open Circuit Inspection**

   Short the wire harness side 18P (Black) connector [1] terminals with a jumper wire [2].

   CONNECTION: 8 – 17

   Check for continuity between the wire harness side 2P (Black) connector [3] terminals.

   CONNECTION: Blue – White

   Is there continuity?

   YES – GO TO STEP 6.

   NO – Open circuit in the Blue or White wire

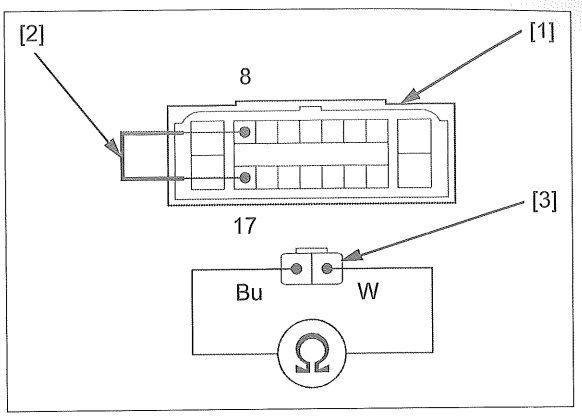

6. **Failure Reproduction with a Known Good Front Wheel Speed Sensor**

   Replace the front wheel speed sensor with a known good one (page 19-22).

   Connect the 18P (Black) and front wheel speed sensor 2P (Blue) connectors.

   Erase the DTC (page 19-7).

   Test-ride the motorcycle above 10 km/h (6 mph).

   Recheck the DTC (page 19-6).

   Is the DTC 1-1, 1-2, 2-1, 4-1 or 4-2 indicated?

   YES – Faulty ABS modulator

   NO – Faulty original front wheel speed sensor

DTC 1-3/1-4/2-3/4-3 (Rear Wheel Speed Sensor Circuit/Rear Wheel Speed Sensor/Rear Pulser Ring/Rear Wheel Lock)

NOTE:

- The ABS indicator might blink under unusual riding conditions (page 19-9). This is temporary failure. Erase the DTC (page 19-7). Then test-ride the motorcycle above 10 km/h (6 mph) to check that the ABS indicator operates normally (page 19-5).
- If DTC 4-3 is indicated, check the rear brake for drag.

1. **Rear Wheel Speed Sensor Clearance Gap Inspection**

   Check the clearance gap between sensor bracket and pulser ring (page 19-23).

   Is the clearance gap correct?

   YES – GO TO STEP 2.

   NO – Check the related parts for deformation and looseness, or damage and repair if necessary. Recheck the clearance gap.

2. **Rear Wheel Speed Sensor Condition Inspection**

   Inspect the area around the rear wheel speed sensor:

   Check that there is no iron or other magnetic deposits between the rear pulser ring and rear wheel speed sensor, and the rear pulser ring slots for obstructions.

   Check the installation condition of the pulser ring or wheel speed sensor for looseness.

   Check the pulser ring and sensor tip for deformation or damage.

   Are the sensor and pulser ring in good condition?

   YES – GO TO STEP 3.

   NO – Remove any deposits. Install properly or replace faulty part.

3. **Rear Wheel Speed Sensor Short Circuit Inspection**

   Turn the ignition switch OFF.

   Disconnect the rear wheel speed sensor 2P (Black) connector (page 19-23).

   Check for continuity between each terminal of the sensor side 2P (Black) connector [1] and ground.

   CONNECTION: Blue – Ground
   White – Ground

   Is there continuity?

   YES – Faulty rear wheel speed sensor

   NO – GO TO STEP 4.

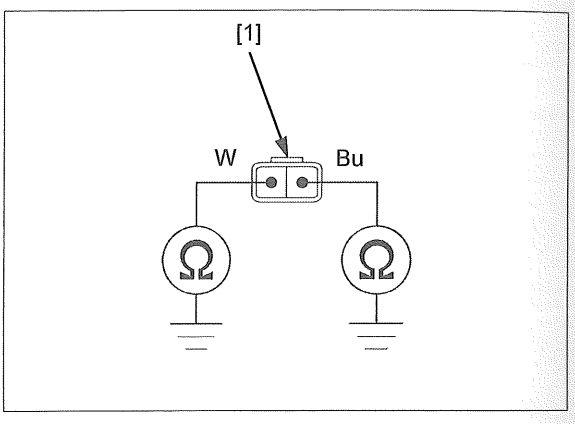

4. **Rear Wheel Speed Sensor Line Short Circuit Inspection**

   Disconnect the ABS modulator 18P (Black) connector (page 19-7).

   Check for continuity between each terminal of the wire harness side 2P (Black) connector [1] and ground.

   CONNECTION: White – Ground
   Blue – Ground

   Is there continuity?

   YES – • Short circuit in the White wire
   • Short circuit in the Blue wire

   NO – GO TO STEP 5.

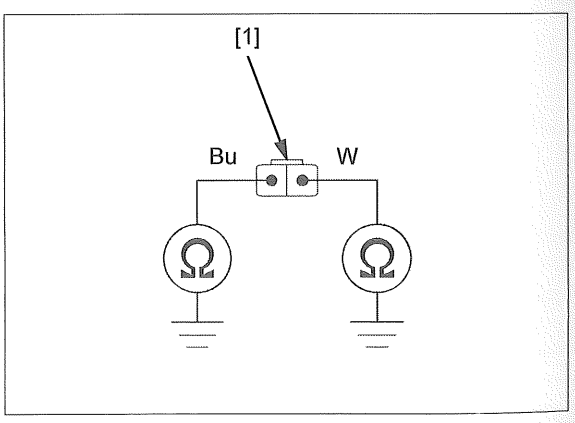

5. **Rear Wheel Speed Sensor Line Open Circuit Inspection**

Short the wire harness side 18P (Black) connector [1] terminals with a jumper wire [2].

CONNECTION: 6 – 15

Check for continuity between the wire harness side 2P (Black) connector [3] terminals.

CONNECTION: White – Blue

Is there continuity?

YES – GO TO STEP 6.

NO – Open circuit in the White wire or Blue wire

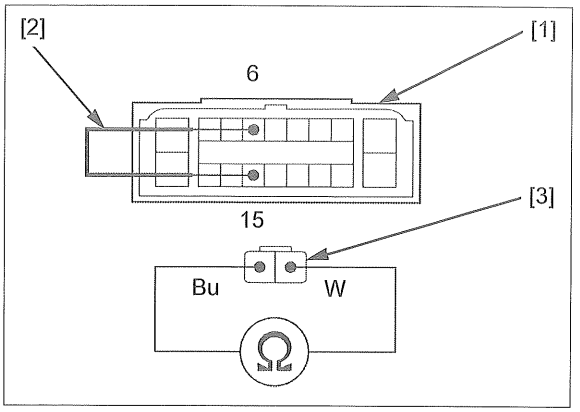

6. **Failure Reproduction with a Known Good Rear Wheel Speed Sensor**

Replace the rear wheel speed sensor with a known good one (page 19-23).

Connect the 18P (Black) connector.

Erase the DTC (page 19-7).

Test-ride the motorcycle above 10 km/h (6 mph).

Recheck the DTC (page 19-6).

Is the DTC 1-3, 1-4, 2-3, or 4-3 indicated?

YES – Faulty ABS modulator

NO – Faulty original rear wheel speed sensor

DTC 3-1/3-2/3-3/3-4 (Solenoid Valve)

1. **Failure Reproduction**

Erase the DTC (page 19-7).

Test-ride the motorcycle above 10 km/h (6 mph).

Recheck the DTC (page 19-6).

Is the DTC 3-1, 3-2, 3-3 or 3-4 indicated?

YES – Faulty ABS modulator

NO – Solenoid valve is normal (intermittent failure).

DTC 5-1/5-2/5-3 (Pump Motor)

1. **Fuse Inspection**

Turn the ignition switch OFF.

Open the fuse box cover (page 19-26) and check for a blown sub fuse ABS M. 30 A [1].

Is the fuse blown?

YES – GO TO STEP 2.

NO – GO TO STEP 3.

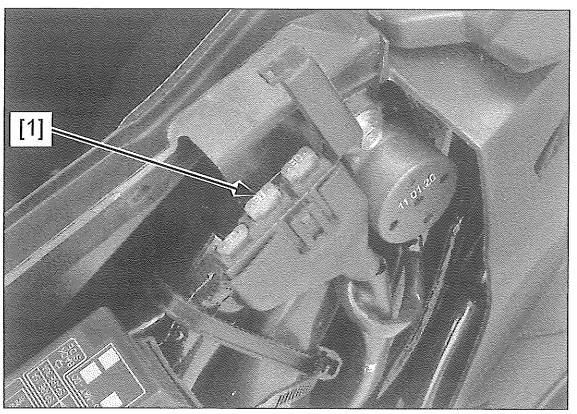

2. **Motor Power Input Line Short Circuit Inspection**

Disconnect the ABS modulator 18P (Black) connector (page 19-7).

With the sub fuse ABS M. 30 A removed, check for continuity between the wire harness side 18P (Black) connector [1] terminal and ground.

CONNECTION: 9 – Ground

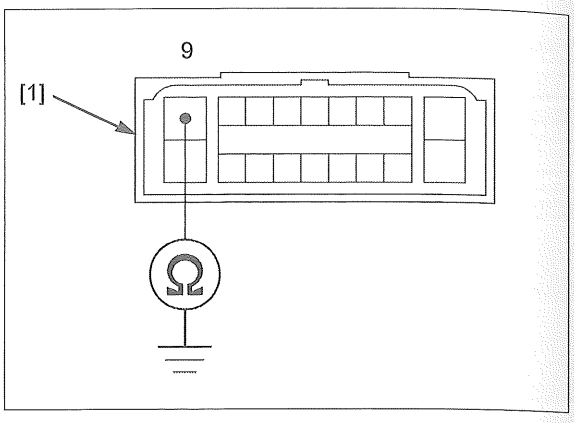

Is there continuity?

YES – Short circuit in the Violet/white wire between the fuse box and 18P (Black) connector

NO – Intermittent failure. Replace the sub fuse ABS M. 30 A with a new one and recheck.

3. **Motor Power Related Line Open Circuit Inspection**

Install the sub fuse ABS M. 30 A.

Disconnect the ABS modulator 18P (Black) connector (page 19-7).

Measure the voltage between the wire harness side 18P (Black) connector [1] terminals.

CONNECTION: 9 (+) – 1 (–)

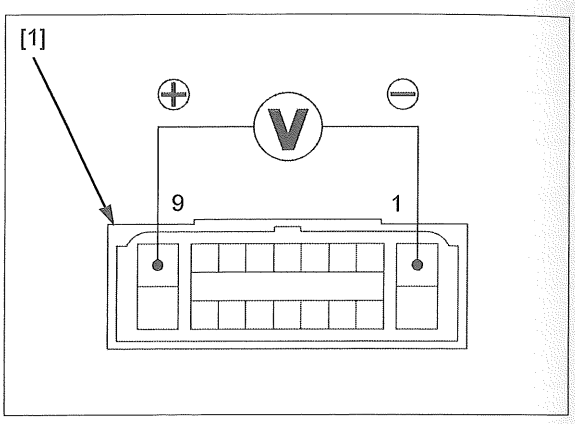

Is there battery voltage?

YES – GO TO STEP 4.

NO – Open circuit in the Black, Violet/white, or Green/blue wire(s) between the battery and 18P (Black) connector

4. **Failure Reproduction**

Turn the ignition switch OFF.

Connect the 18P (Black) connector.

Erase the DTC (page 19-7).

Test-ride the motorcycle above 10 km/h (6 mph).

Recheck the DTC (page 19-6).

Is the DTC 5-1, 5-2, or 5-3 indicated?

YES – Faulty ABS modulator

NO – Pump motor is normal (intermittent failure)

DTC 5-4 (Fail-safe Relay)

1. Fuse Inspection

Turn the ignition switch OFF.

Open the fuse box cover (page 19-26) and check for a blown sub fuse ABS SOL. 30 A [1].

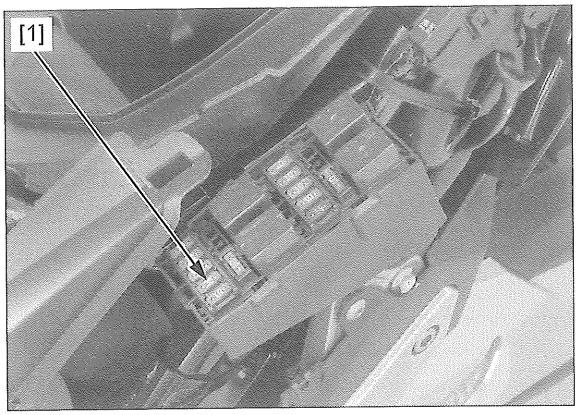

Is the fuse blown?

YES – GO TO STEP 2.

NO – GO TO STEP 3.

2. Solenoid Power Input Line Short Circuit Inspection

Disconnect the ABS modulator 18P (Black) connector (page 19-7).

With the sub fuse ABS SOL. 30 A removed, check for continuity between the wire harness side 18P (Black) connector [1] terminal and ground.

CONNECTION: 18 – Ground

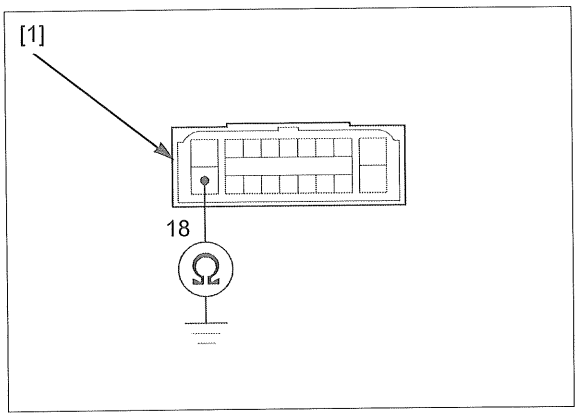

Is there continuity?

YES – Short circuit in the Black/white wire between the fuse box and 18P (Black) connector

NO – Intermittent failure. Replace the sub fuse ABS SOL. 30 A with a new one and recheck.

3. Solenoid Power Input Line Open Circuit Inspection

Install the sub fuse ABS SOL. 30 A.

Disconnect the ABS modulator 18P (Black) connector (page 19-7).

Measure the voltage between the wire harness side 18P (Black) connector [1] terminal and ground.

CONNECTION: 18 (+) – Ground (–)

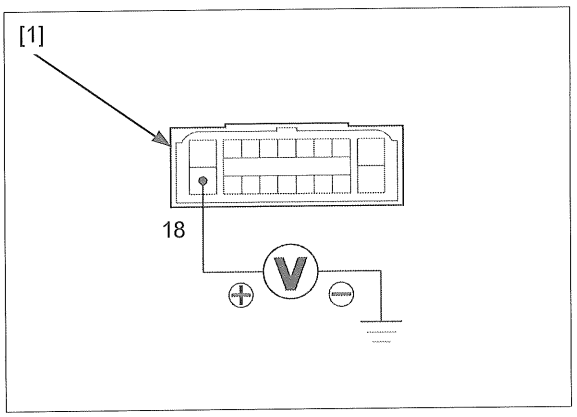

Is there battery voltage?

YES – GO TO STEP 4.

NO – Open circuit in the Black or Black/white wire between the battery and 18P (Black) connector

4. Failure Reproduction

Turn the ignition switch OFF.

Connect the ABS modulator 18P (Black) connector.

Erase the DTC (page 19-7).

Test-ride the motorcycle above 10 km/h (6 mph).

Recheck the DTC (page 19-6).

Is the DTC 5-4 indicated?

YES – Faulty ABS modulator

NO – Fail-safe relay is normal (intermittent failure).

DTC 6-1/6-2 (Power Circuit)

1. **Fuse Inspection**

Turn the ignition switch OFF.

Open the fuse box cover (page 19-26).

Check the sub fuse ABS M. 30 A [1] for blown

Is the fuse blown?

YES – GO TO STEP 2.

NO – GO TO STEP 4.

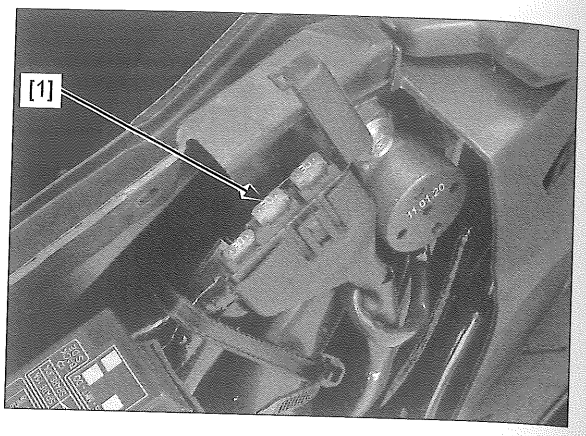

2. **Motor Power Input Line Short Circuit Inspection**

Disconnect the ABS modulator 18P (Black) connector (page 19-7).

With the sub fuse ABS M. 30 A removed, check for continuity between the wire harness side 18P (Black) connector [1] terminal and ground.

CONNECTION: 9 – Ground

Is there continuity?

YES – Short circuit in the Violet/white wire

NO – Intermittent failure. Replace the sub fuse ABS M. 30 A with a new one, and recheck.

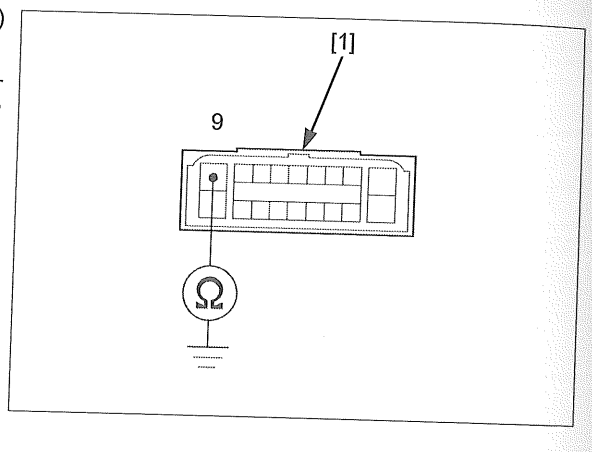

3. **Battery Test**

Check the battery condition (page 20-5).

Is the battery good condition?

YES – GO TO STEP 4.

NO – Replace the battery (page 20-5).

4. **Motor Power Input Line Open Circuit Inspection**

Install the sub fuse ABS M. 30 A.

Disconnect the ABS modulator 18P (Black) connector (page 19-7).

Measure the voltage between the wire harness side 18P (Black) connector [1] terminal and ground.

CONNECTION: 9 (+) – Ground (–)

Is there battery voltage?

YES – GO TO STEP 5.

NO – Open circuit in the Violet/white or Black wire between the 18P (Black) connector and battery

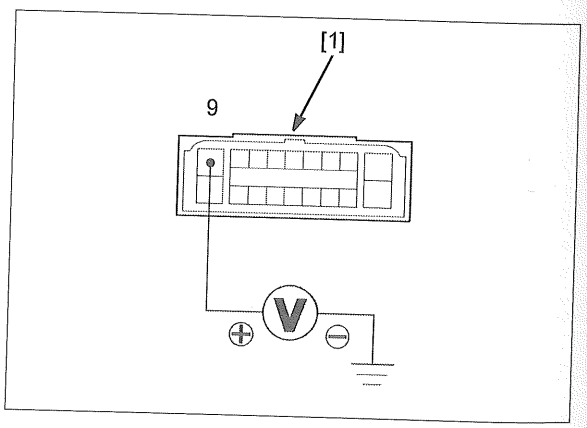

5. **Charging Voltage Inspection**

Inspect the battery charging voltage (page 20-6).

Is the voltage within standard?

YES – GO TO STEP 6.

NO – Faulty regulator/rectifier

6. **Failure Reproduction**

   Erase the DTC (page 19-7).

   Test-ride the motorcycle above 10 km/h (6 mph).

   Recheck the DTC (page 19-6).

   Is the DTC 6-1 or 6-2 indicated?

   YES – Faulty ABS modulator

   NO – Power circuit is normal (intermittent failure)

DTC 7-1 (Tire Size)

NOTE:

- Check the following and correct the faulty part.
  - Incorrect tire pressure.
  - Tires not recommended for the motorcycle were installed (incorrect tire size).
  - Deformation of the wheel or tire.

1. **Failure Reproduction**

   If the above items are normal, recheck the DTC:

   Erase the DTC (page 19-7).

   Test-ride the motorcycle above 10 km/h (6 mph).

   Recheck the DTC (page 19-6).

   Is the DTC 7-1 indicated?

   YES – Faulty ABS modulator

   NO – Tire size is normal (intermittent failure)

DTC 8-1 (ABS Control Unit)

1. **Failure Reproduction**

   Erase the DTC (page 19-7).

   Test-ride the motorcycle above 10 km/h (6 mph).

   Recheck the DTC (page 19-6).

   Is the DTC 8-1 indicated?

   YES – Faulty ABS modulator

   NO – ABS control unit is normal (intermittent failure)

DTC 8-6 (CAN COMMUNICATION MALFUNCTION)

Refer to PGM-FI troubleshooting:

- DTC U0001: page 4-50

DTC 8-7 (CAN COMMUNICATION ERROR)

1. ABS Control Unit CAN Line Open Circuit Inspection

Disconnect the following:

- ABS modulator 18P (Black) connector (page 19-7)
- Combination meter 24P (Gray) connector (page 21-7)

Check for continuity between the 18P (Black) connector [1] and 24P (Gray) connector [2].

TOOL:
Test probe **07ZAJ-RDJA110**

CONNECTION: 2 – Brown
11 – Black

Is there continuity?

YES – GO TO STEP 2.

NO – • Open circuit in the Brown wire
• Open circuit in the Black wire

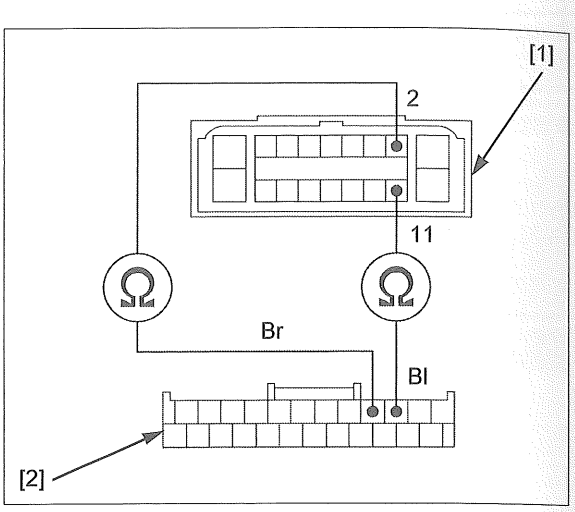

2. Combination Meter Inspection

Replace the combination meter with a known good one (page 21-7).

Erase the DTC (page 19-7).

Test-ride the motorcycle above 10 km/h (6 mph).

Recheck the DTC (page 19-6).

Is the DTC 8-7 indicated?

YES – Faulty ABS modulator

NO – Faulty original combination meter

WHEEL SPEED SENSOR

WHEEL SPEED SENSOR REPLACEMENT

NOTE:

- Refer to procedure for the pulser ring removal/ installation.
  – Front pulser ring (page 16-13)
  – Rear pulser ring (page 17-5)

FRONT WHEEL SPEED SENSOR REMOVAL/ INSTALLATION

Remove the upper meter cover/front cowl/air intake cover (page 2-17).

Release the front wheel speed sensor 2P (Black) connector [1] from the clip and disconnect it.

Remove the front wheel speed sensor wire [2] from the clamp [3].

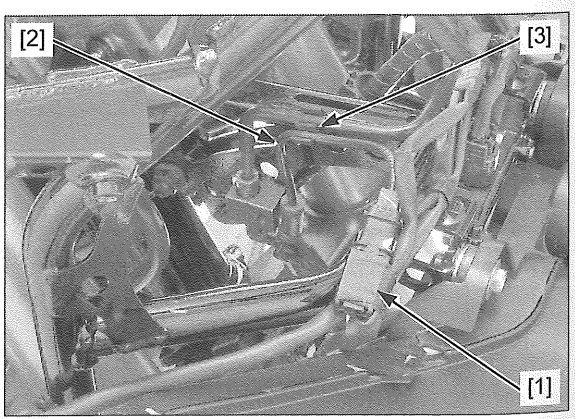

Remove the bolts [1] and release the front wheel speed sensor wire [2] from the clamps [3].

Remove the wire clip [4].

NOTE:

- When installing, set the wire clip midway between the clamps.

Remove the clip [5] from the front reflector stay.

Remove the mounting bolt [6] and front wheel speed sensor [7].

Installation is in the reverse order of removal.

NOTE:

- Route the hose and wire properly (page 1-20).
- Replace the front wheel speed sensor mounting bolt with new ones.
- Check the clearance gap between the sensor bracket and pulser ring is 0.43 – 1.02 mm (0.017 – 0.040 in).
  The clearance gap cannot be adjusted. If it is not within specification, check related part for deformation, looseness, or damage.

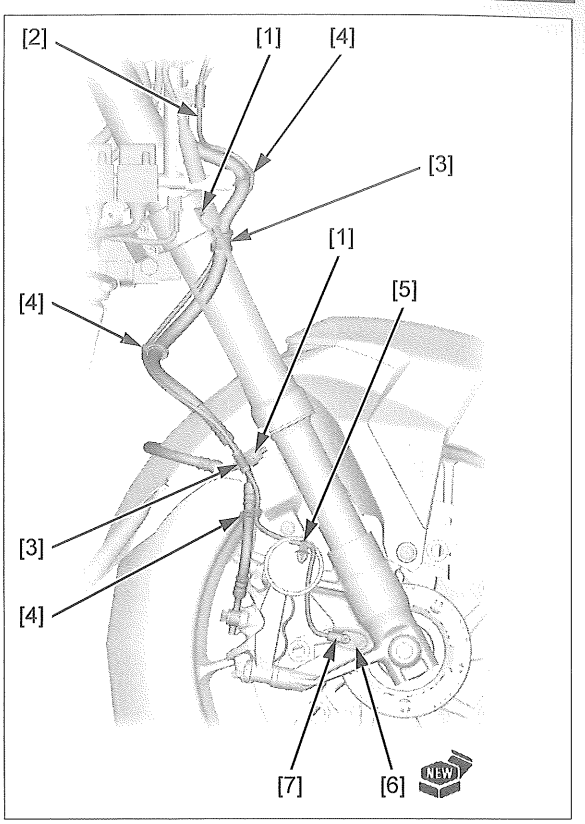

REAR WHEEL SPEED SENSOR REMOVAL/ INSTALLATION

Remove the following:

– Heat guard (page 2-24)
– Rear wheel (page 17-4)

Release the rear wheel speed sensor 2P (Black) connector [1] from the connector setting stay and disconnect it.

Remove the following:

– Wire clip [2]
– Clamps [3]

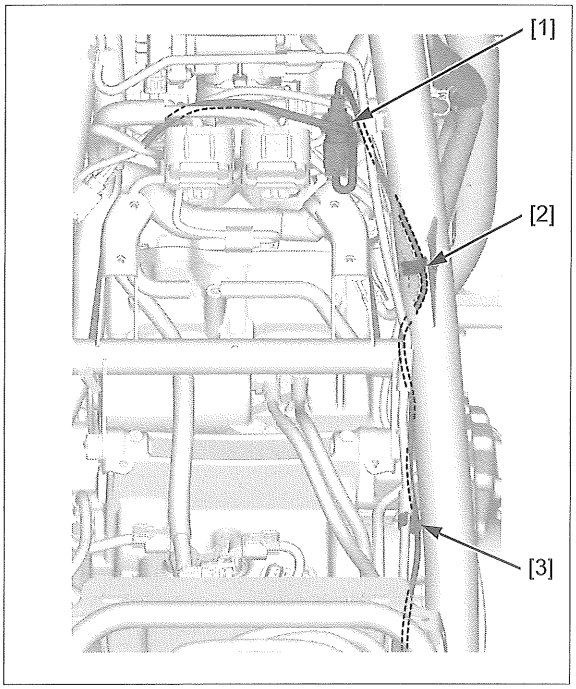

Remove the wire clips [1].

Remove the clamp [2].

Remove the bolt [3] and wire clamp [4].

Remove the rear wheel speed sensor wire [5] from the clamps [6].

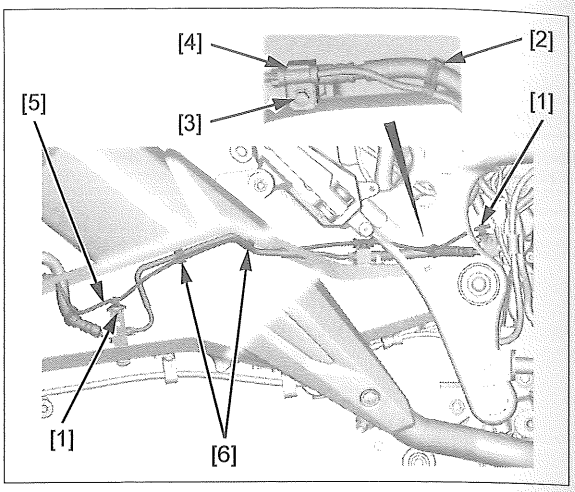

Remove the clamp [1].

Remove the bolt [2] and wire clamp [3].

Remove the mounting bolt [4] and rear wheel speed sensor [5].

Clean around the mounting area of the caliper bracket thoroughly and be sure that no foreign material is allowed to enter the mounting hole.

Installation is in the reverse order of removal.

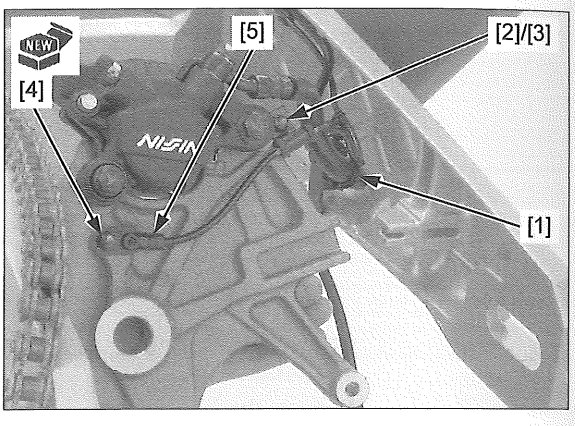

NOTE:

- Route the wire properly (page 1-20).
- Replace the rear wheel speed sensor mounting bolt with a new one.
- Check the clearance gap between the sensor bracket and pulser ring is 0.51 – 0.97 mm (0.020 – 0.038 in).
  The clearance gap cannot be adjusted. If it is not within specification, check related part for deformation, looseness, or damage.

ABS MODULATOR

REMOVAL/INSTALLATION

NOTICE

Spilled fluid can damage painted, plastic or rubber parts. Place a rag over these parts whenever the system is serviced.

NOTE:

- When removing the brake pipe joint nuts, cover the end of the brake pipes and ABS modulator to prevent contamination.
- Be careful not to bend or damage the brake pipes during assembly or removal.

Remove the left front side cowl (page 2-15).

Drain the brake fluid from the hydraulic system (page 18-5).

Disconnect the ABS modulator 18P (Black) connector [1].

Loosen the brake pipe joint nuts [2] and disconnect the brake pipes [3] from the ABS modulator [4].

Remove the bolts [5] and ABS modulator with the stay [6].

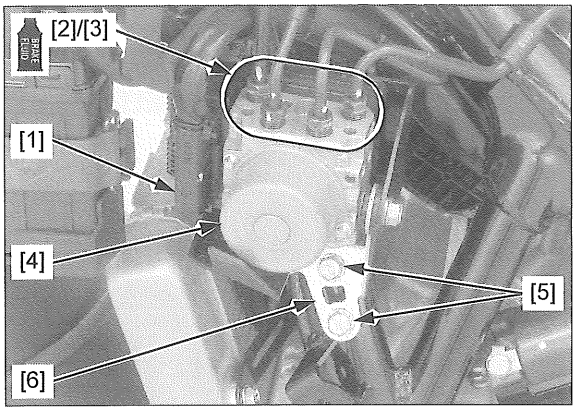

Remove the following from the modulator [1]:

- Bolts [2]
- Washers [3]
- ABS modulator heat guard [4]
- Grommets [5]
- Stay [6]
- Collars [7]

Installation is in the reverse order of removal.

NOTE:

- Apply brake fluid to the joint nut threads.

TORQUE:

Brake pipe joint nut:

14 N·m (1.4 kgf·m, 10 lbf·ft)

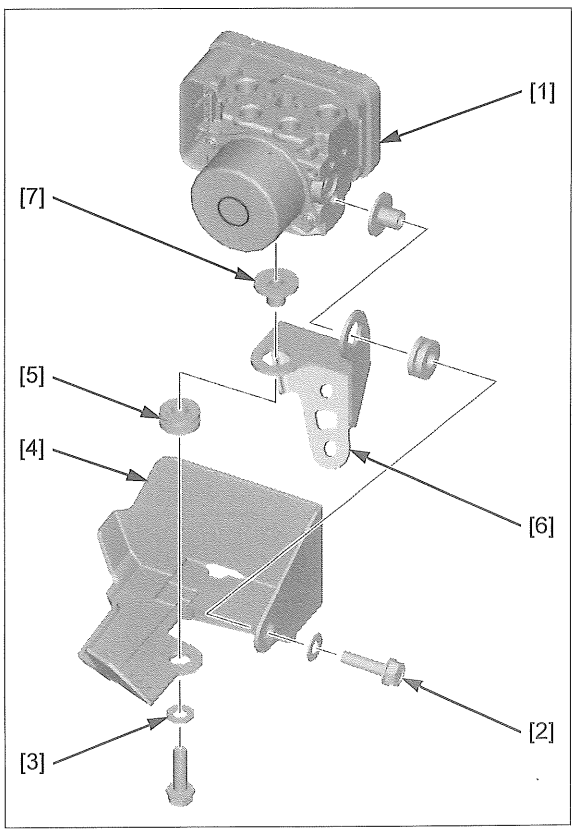

ABS FUSE

REMOVAL/INSTALLATION

Remove the left rear cowl (page 2-25).

Open the ABS fuse box cover [1].

- PVB 30 A fuse [2]
- ABS M 30 A fuse [3]
- Spare fuse [4]

Installation is in the reverse order of removal.

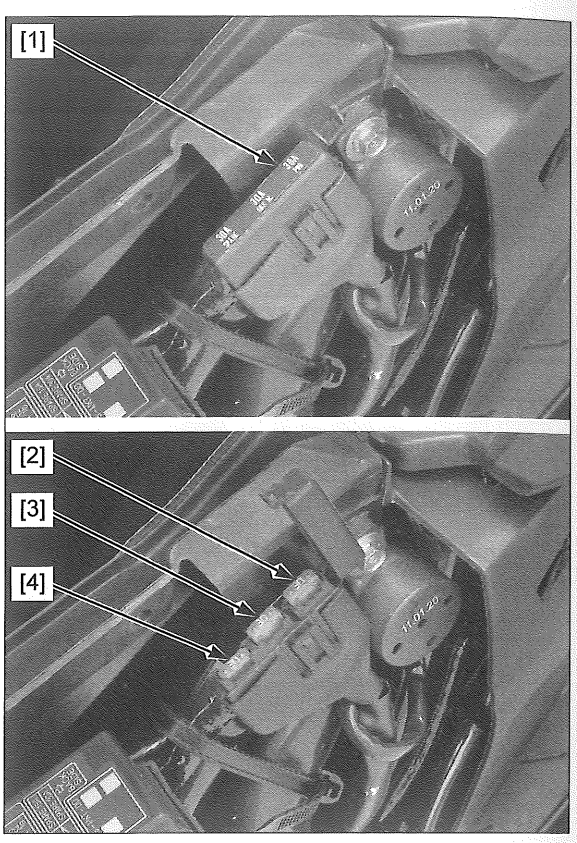

20. BATTERY/CHARGING SYSTEM

SERVICE INFORMATION 20-2

TROUBLESHOOTING 20-3

SYSTEM LOCATION 20-4

SYSTEM DIAGRAM 20-4

BATTERY 20-5

CHARGING SYSTEM INSPECTION 20-6

REGULATOR/RECTIFIER 20-7

ALTERNATOR CHARGING COIL 20-8

SERVICE INFORMATION

GENERAL

⚠WARNING

- The battery gives off explosive gases; keep sparks, flames and cigarettes away. Provide adequate ventilation when charging.
- The battery contains sulfuric acid (electrolyte). Contact with skin or eyes may cause severe burns. Wear protective clothing and a face shield.
  - If electrolyte gets on your skin, flush with water.
  - If electrolyte gets in your eyes, flush with water for at least 15 minutes and call a physician immediately.
- Electrolyte is poisonous.
  - If swallowed, drink large quantities of water or milk and call your local Poison Control Center or call a physician immediately.

NOTICE

- *Always turn OFF the ignition switch before disconnecting any electrical component.*
- *Some electrical components may be damaged if terminals or connectors are connected or disconnected while the ignition switch is ON and current is present.*

- For extended storage, remove the battery, give it a full charge, and store it in a cool, dry space. For maximum service life, charge the stored battery every two weeks.
- For a battery remaining in a stored motorcycle, disconnect the battery negative (–) cable from the battery terminal.
- The maintenance free (MF) battery must be replaced when it reaches the end of its service life.
- The battery can be damaged if overcharged or undercharged, or if left to discharge for long period. These same conditions contribute to shortening the "life span" of the battery. Even under normal use, the performance of the battery deteriorates after 2 – 3 years.
- Battery voltage may recover after battery charging, but under heavy load, battery voltage will drop quickly and eventually die out. For this reason, the charging system is often suspected as the problem. Battery overcharge often results from problems in the battery itself, which may appear to be an overcharging symptom. If one of the battery cells is shorted and battery voltage does not increase, the regulator/rectifier supplies excess voltage to the battery. Under these conditions, the electrolyte level goes down quickly.
- Before troubleshooting the charging system, check for proper use and maintenance of the battery. Check if the battery is frequently under heavy load, such as having the headlight and taillight ON for long periods of time without riding the motorcycle.
- The battery will self-discharge when the motorcycle is not in use. For this reason, charge the battery every two weeks to prevent sulfation from occurring.
- When checking the charging system, always follow the steps in the troubleshooting flow chart (page 20-3).
- For alternator service (page 12-2).

BATTERY CHARGING

- Turn power ON/OFF at the charger, not at the battery terminal.
- For battery charging, do not exceed the charging current and time specified on the battery. Using excessive current or extending the charging time may damage the battery.
- Quick charging should only be done in an emergency; slow charging is preferred.

BATTERY TESTING

Refer to the battery tester's Operation Manual for the recommended battery testing procedure.
The recommended battery tester puts a "load" on the battery so the actual battery condition of the load can be measured.

RECOMMENDED BATTERY TESTER: BM-210 or BATTERY MATE or equivalent

TROUBLESHOOTING

BATTERY IS DAMAGED OR WEAK

1. **BATTERY TEST**

   Remove the battery (page 20-5).

   Check the battery condition using the recommended battery tester.

   RECOMMENDED BATTERY TESTER: BM-210 or BATTERY MATE or equivalent

   Is the battery good condition?

   YES – GO TO STEP 2.

   NO – Faulty battery

2. **CURRENT LEAKAGE TEST**

   Install the battery (page 20-5).

   Check the battery current leakage test (page 20-6).

   Is the current leakage below 1.1 mA?

   YES – GO TO STEP 3.

   NO – GO TO STEP 6.

3. **CHARGING VOLTAGE INSPECTION**

   Measure and record the battery voltage using a digital multimeter (page 20-5).

   Start the engine.

   Measure the charging voltage (page 20-6).

   Compare the measurement to result of the following calculation.

   STANDARD:
   Measured BV < Measured CV < 15.5 V
   - **BV = Battery Voltage**
   - **CV = Charging Voltage**

   Is the measured charging voltage within the standard voltage?

   YES – Faulty battery

   NO – GO TO STEP 4.

4. **REGULATOR/RECTIFIER SYSTEM INSPECTION**

   Inspect the regulator/rectifier circuit (page 20-7).

   Is the regulator/rectifier circuit correct?

   YES – GO TO STEP 5.

   NO –
   - Open circuit in related wire
   - Loose or poor contacts of related terminal
   - Shorted wire harness

5. **ALTERNATOR CHARGING COIL INSPECTION**

   Check the alternator charging coil (page 20-8).

   Is the alternator charging coil resistance within 0.1 – 0.5 Ω (20°C/68°F)?

   YES – Faulty regulator/rectifier

   NO – Faulty charging coil

6. **CURRENT LEAKAGE TEST WITHOUT REGULATOR/RECTIFIER CONNECTOR**

   Disconnect the regulator/rectifier 3P (Black) connector and recheck the battery current leakage.

   Is the current leakage below 1.1 mA?

   YES – Faulty regulator/rectifier

   NO – Shorted wire harness

SYSTEM LOCATION

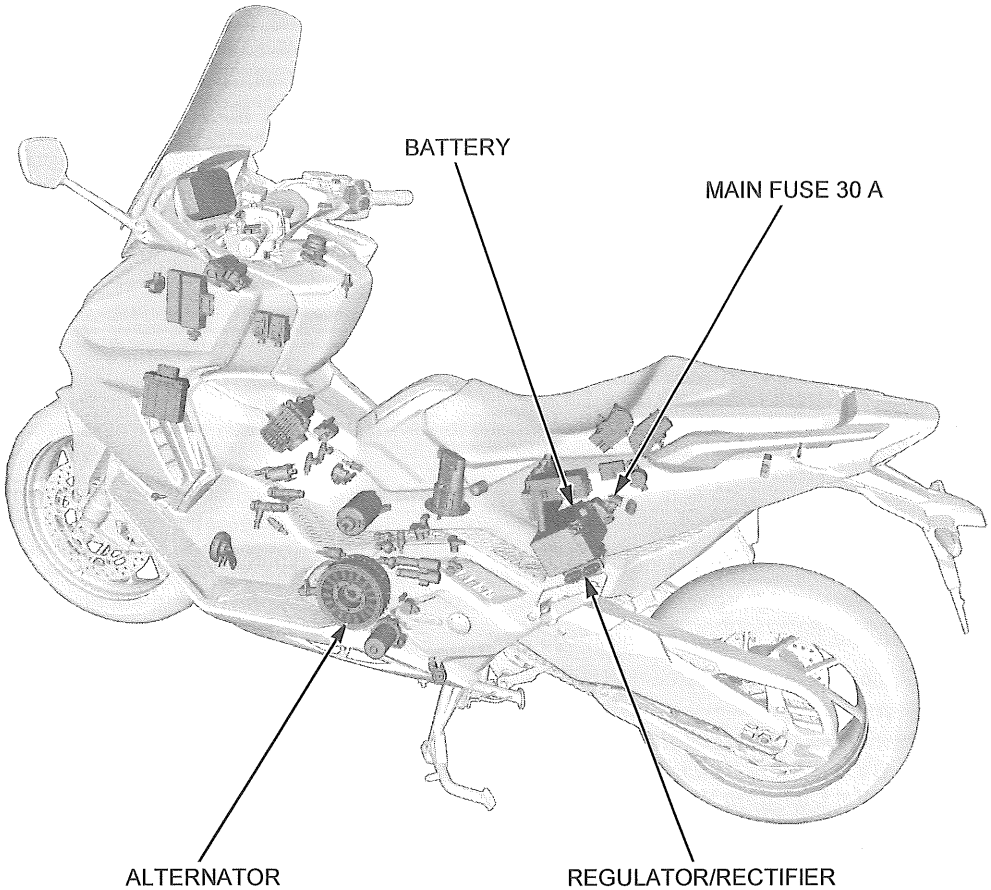

SYSTEM DIAGRAM

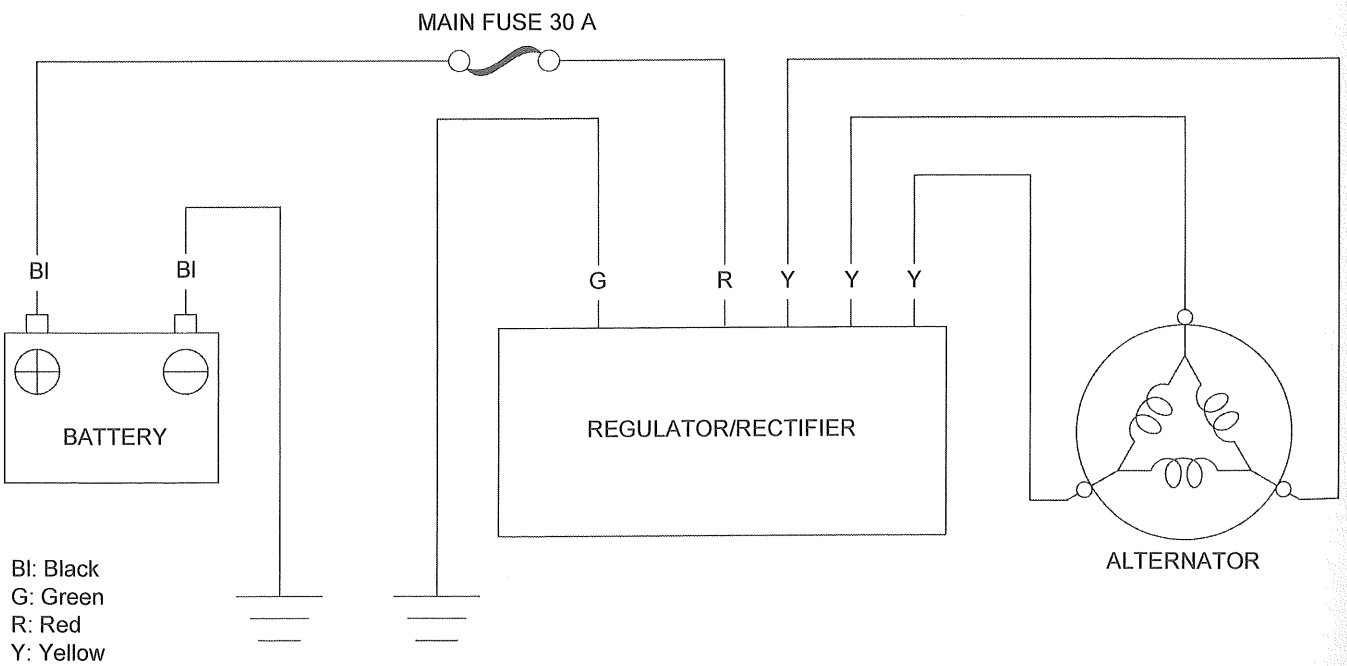

BATTERY

REMOVAL/INSTALLATION

Open the seat.

Remove the four trim clips [1] and maintenance lid [2].

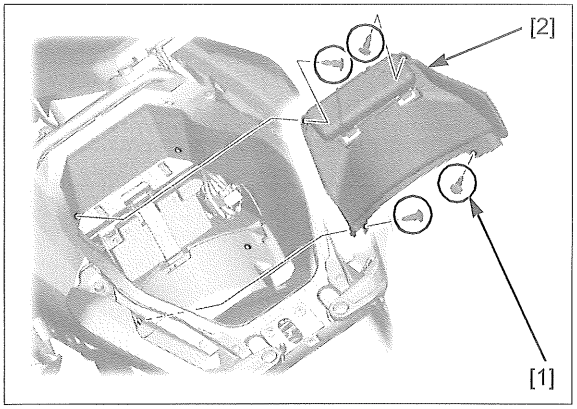

Remove the battery holder band [1].

NOTE:

- Always turn the ignition switch OFF before removing the battery.

Disconnect the battery negative (–) cable [2] first, then disconnect the battery positive (+) cable [3].

Remove the battery [4].

Installation is in the reverse order of removal.

NOTE:

- Connect the positive (+) cable first, then connect the negative (–) cable.
- For digital clock setting procedure (page 21-11).

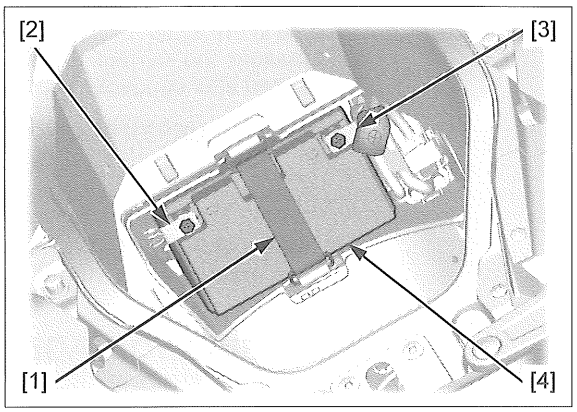

VOLTAGE INSPECTION

Remove the maintenance lid (page 20-5).

Measure the battery voltage using a commercially available digital multimeter.

VOLTAGE (20°C/68°F):

Fully charged: 13.0 – 13.2 V

Needs charging: Below 12.4 V

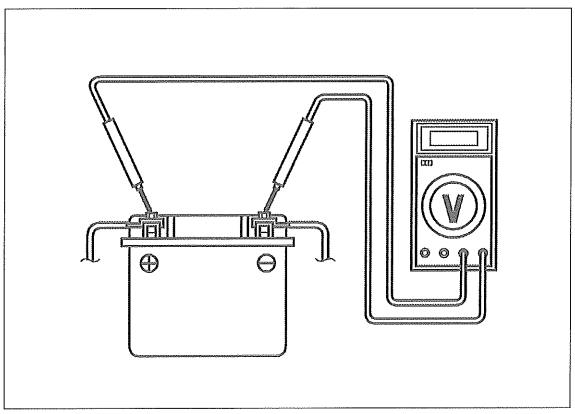

BATTERY TESTING

Remove the battery (page 20-5).

Refer to the instructions that are appropriate to the battery testing equipment available to you.

TOOL:

Battery tester BM-210 or BATTERY MATE or equivalent

CHARGING SYSTEM INSPECTION

CURRENT LEAKAGE TEST

Remove the maintenance lid (page 20-5).

Turn the ignition switch OFF, disconnect the negative (–) cable [1] from the battery.

Connect the ammeter (+) probe [2] to the negative (–) cable and the ammeter (–) probe [3] to the battery (–) terminal.

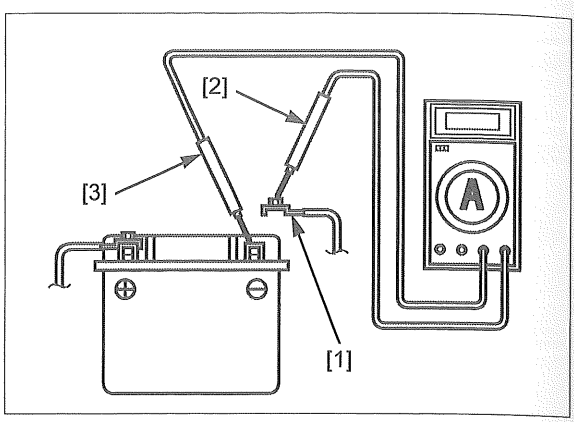

With the ignition switch OFF, check for current leakage.

NOTE:

- When measuring current using a tester, set it to a high range, and then bring the range down to an appropriate level. Current flow higher than the range selected may blow the fuse in the tester.
- While measuring current, do not turn the ignition switch ON. A sudden surge of current may blow the fuse in the tester.
- Measure the current leakage, after 1 minute has passed after connecting ammeter.

SPECIFIED CURRENT LEAKAGE: 1.1 mA maximum

If current leakage exceeds the specified value, a shorted circuit is the probable cause.

Locate the short by disconnecting connections one by one and measuring the current.

CHARGING VOLTAGE INSPECTION

NOTE:

- Make sure the battery is in good condition before performing this test.

Start the engine and warm it up to the operating temperature; then stop the engine.

Remove the maintenance lid (page 20-5).

Connect the multimeter between the positive (+) terminal [1] and negative (–) terminal [2] of the battery.

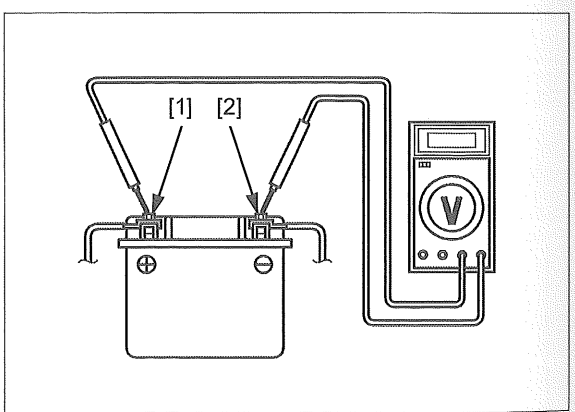

NOTE:

- To prevent a short, make absolutely certain which are the positive (+) and negative (–) terminals or cable.
- Do not disconnect the battery or any cable in the charging system without first switching off the ignition switch. Failure to follow this precaution can damage the tester or electrical components.

With the headlight on high beam, restart the engine.

Measure the voltage on the multimeter when the engine runs at 5,000 min^{-1} (rpm).

STANDARD:

Measured BV < Measured CV < 15.5 V

- **BV = Battery Voltage (page 20-5)**
- **CV = Charging Voltage**

REGULATOR/RECTIFIER

REMOVAL/INSTALLATION

Remove the rear fender C (page 2-30).

Disconnect the alternator 3P (Gray) [1] and regulator/rectifier 3P (Black) [2] connectors.

Remove the bolts [3] and regulator/rectifier [4].

Installation is in the reverse order of removal.

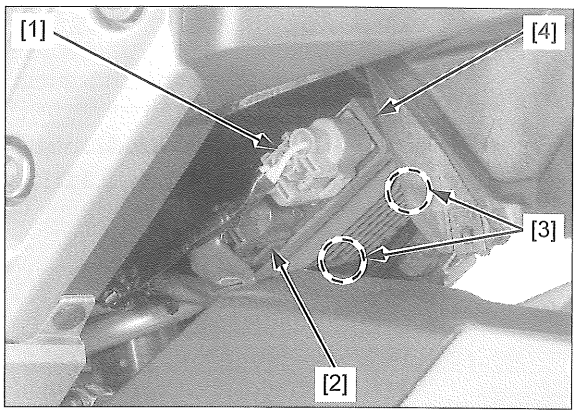

SYSTEM INSPECTION

Check connectors for loose contact or corroded terminals.

Inspect the following items:

- Battery charging line (page 20-7)
- Ground line (page 20-7)
- Charging coil (page 20-8)

If all components of the charging system are normal and there are no loose connections at the regulator/rectifier connectors, replace the regulator/rectifier.

BATTERY CHARGING LINE INSPECTION

Turn the ignition switch OFF.

Disconnect the regulator/rectifier 3P (Black) connector [1] (page 20-7).

Measure the voltage between the regulator/rectifier 3P (Black) connector terminal at the wire side and ground.

CONNECTION: Red (+) – Ground (–)
STANDARD: Battery voltage

There should be battery voltage at all times.

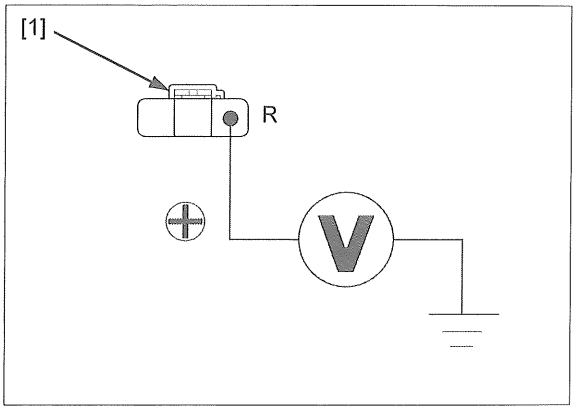

GROUND LINE INSPECTION

Turn the ignition switch OFF.

Disconnect the regulator/rectifier 3P (Black) connector (page 20-7).

Check for continuity between the regulator/rectifier 3P (Black) connector [1] at the wire side and ground.

CONNECTION: Green – Ground

There should be continuity at all times.

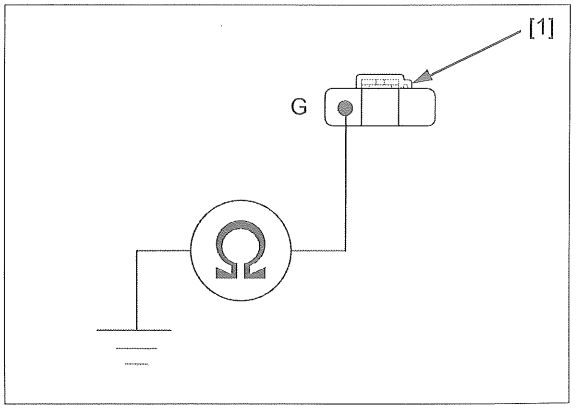

ALTERNATOR CHARGING COIL

CHARGING COIL INSPECTION

Disconnect the alternator 3P (Gray) connector (page 20-7).

Measure the resistance between the wire harness side alternator 3P (Gray) connector [1] terminals.

CONNECTION: Yellow – Yellow
STANDARD: 0.1 – 0.5 Ω (20°C/68°F)

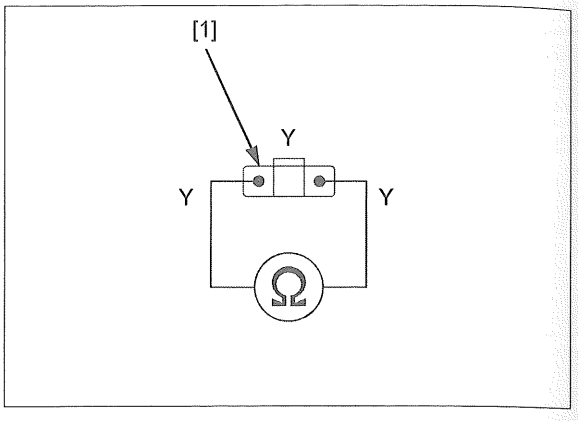

Check for continuity between the wire harness side alternator 3P (Gray) connector [1] terminals and ground.

CONNECTION: Yellow – Ground
STANDARD: No continuity

Replace the stator if the resistance is out of specification, or if any wire has continuity to ground.

For alternator/starter replacement (page 12-9).

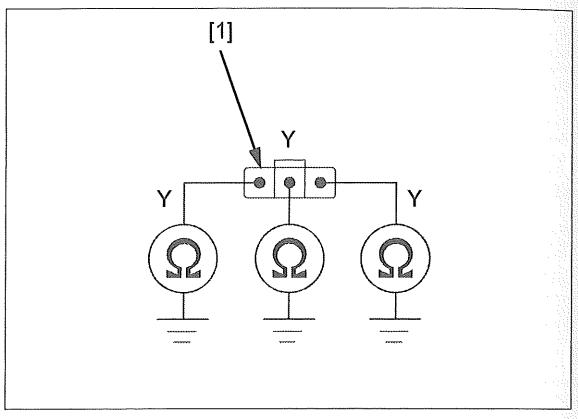

21. LIGHTS/METERS/SWITCHES

SERVICE INFORMATION 21-2

SYSTEM LOCATION 21-2

HEADLIGHT 21-3

TURN SIGNAL LIGHT 21-5

BRAKE/TAILLIGHT 21-6

LICENSE LIGHT 21-7

COMBINATION METER 21-7

HSVCs (Honda Smartphone Voice Control system) (Except KO, CH types) 21-12

OPEN AIR TEMPERATURE SENSOR 21-13

ENGINE OIL PRESSURE INDICATOR/ EOP SWITCH 21-14

FUEL LEVEL SENSOR 21-15

PARKING BRAKE INDICATOR/ SWITCH 21-16

HANDLEBAR SWITCHES 21-17

BRAKE LIGHT SWITCH 21-20

HORN 21-20

USB CHARGER UNIT 21-21

LUGGAGE BOX LIGHT/LUGGAGE BOX LIGHT SWITCH 21-22

RELAY 21-22

BCU 21-23

BODY CONTROL SYSTEM TROUBLESHOOTING INFORMATION 21-26

BODY CONTROL SYSTEM DIAGRAM 21-27

BODY CONTROL SYSTEM DTC INDEX 21-28

BODY CONTROL SYSTEM DTC TROUBLESHOOTING 21-29

SERVICE INFORMATION

GENERAL

- Check the battery condition before performing any inspection that requires proper battery voltage.
- A continuity test can be made with the switches installed on the motorcycle.
- The following color codes are used throughout this section.

Be = Beige	Bl = Black	Br = Brown	Bu = Blue	G = Green	Lg = Light green
Lb = Light blue	Lg = Light green	P = Pink	R = Red	W = White	Y = Yellow

SYSTEM LOCATION

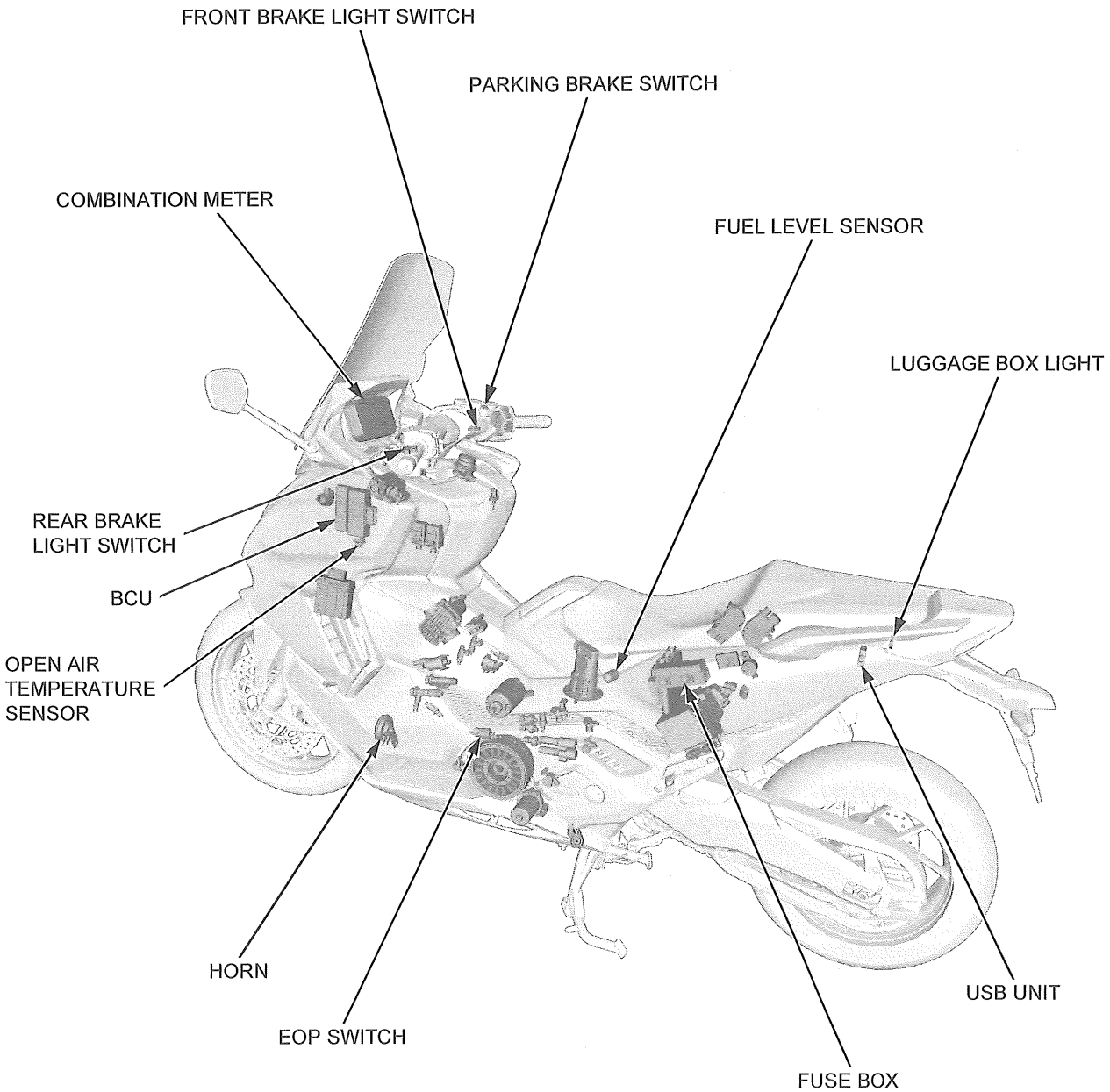

HEADLIGHT

REMOVAL/INSTALLATION

Remove the upper meter cover/front cowl/air intake cover (page 2-17).

Remove the bolt/washers [1].

Disconnect the following:

- Left LED headlight 8P (Black) connector [2]
- Right LED headlight 8P (Black) connector [3]

Remove the headlight assembly [4] and collars [5].

Installation is in the reverse order of removal.

TORQUE: 11 N·m (1.1 kgf·m, 8 lbf·ft)

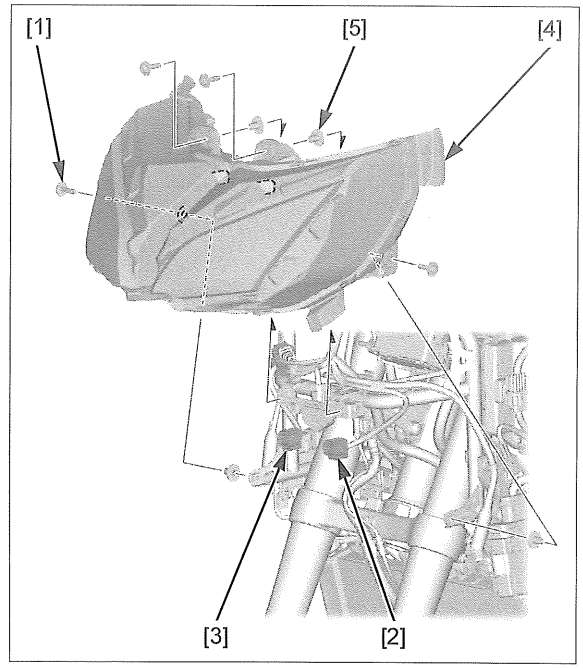

INSPECTION

Check the following before inspection:

- Battery condition
- Blown sub fuse HEAD LIGHT 10 A
- BCU DTC (page 21-28)

Check the following lighting condition:

- Headlight low beam [1]
- Headlight high beam [2]

CH type only:
- Position light [3]

NOTE:

- If any LED in the headlight unit does not turn on, replace the headlight unit as an assembly.
- When the headlight does not light properly, check the following:
  - Headlight power/ground line (page 21-4)
  - Faulty circuit between the headlight unit and BCU

Except CH types:

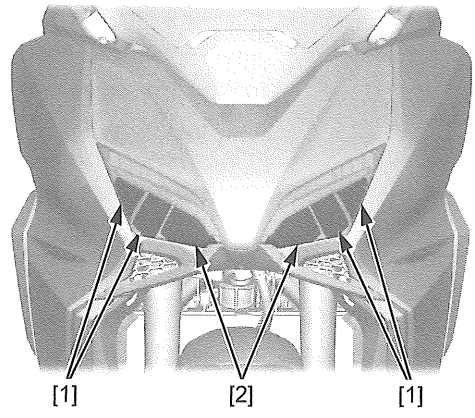

CH type:

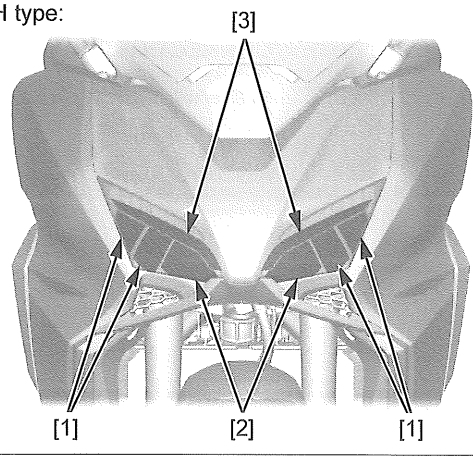

POWER/GROUND LINE INSPECTION

HEADLIGHT DRIVER

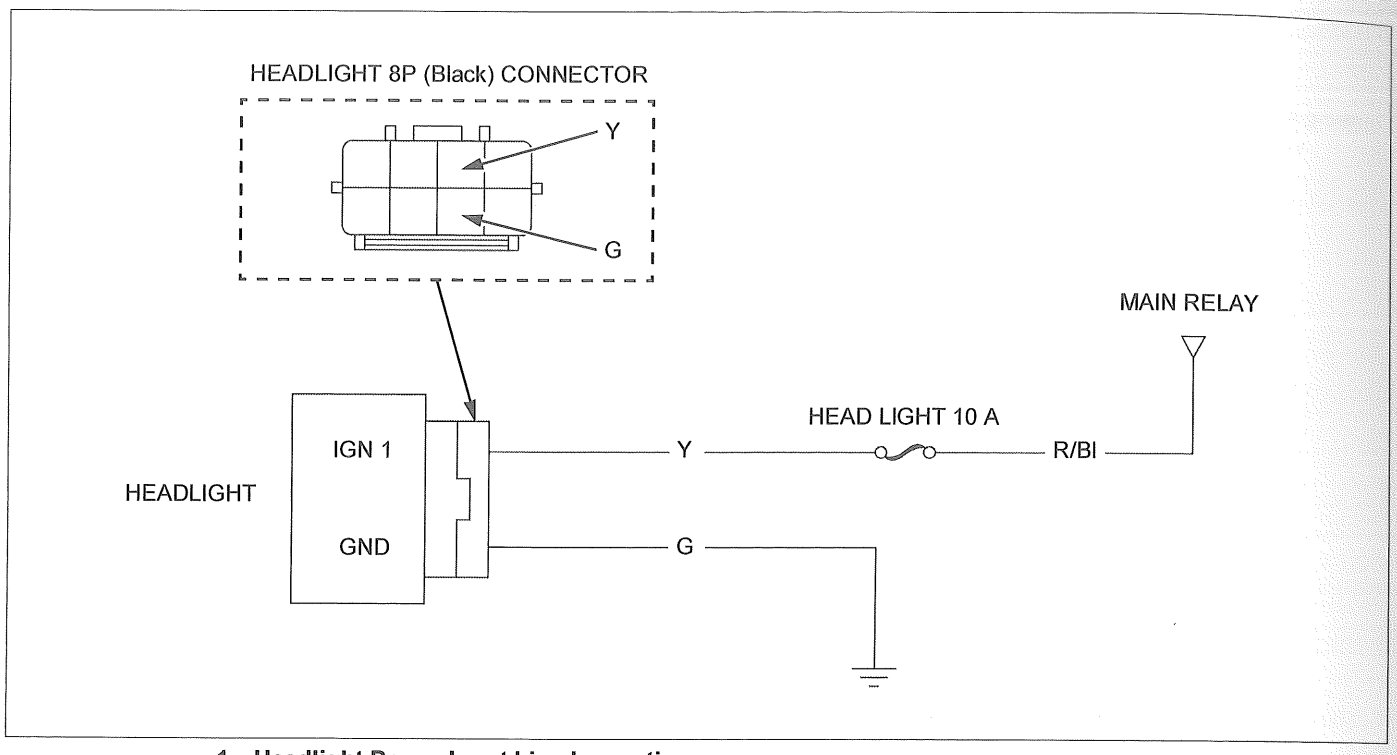

1. **Headlight Power Input Line Inspection**

   Remove the headlight (page 21-3).

   Turn the ignition switch ON.

   Measure the voltage at the wire harness side 8P (Black) connector terminal and ground.

   CONNECTION: Yellow (+) – Ground (–)
   STANDARD: Battery voltage

   Is there battery voltage?

   YES – GO TO STEP 2.

   NO – • Open circuit in the Yellow wire
   • Blown sub fuse HEAD LIGHT 10 A
   • Faulty main relay (page 21-22)or its related circuit

2. **Headlight Ground Line Open Circuit Inspection**

   Check the continuity between the wire harness side 8P (Black) connector terminal and ground.

   CONNECTION: Green – Ground

   Is there continuity?

   YES – Faulty headlight

   NO – Open circuit in the Green wire

TURN SIGNAL LIGHT

REMOVAL/INSTALLATION

FRONT TURN SIGNAL LIGHT

Refer to the front side cowl disassembly/assembly (page 2-16).

REAR TURN SIGNAL LIGHT

Refer to the license light cover disassembly/assembly (page 2-28).

INSPECTION

Turn the ignition switch ON and operate the turn signal switch or hazard switch.

Check that all LEDs in the turn signal light turn on.

If any LED does not turn on, replace the turn signal light (page 21-5).

NOTE:

- The turn signal lights are controlled by the BCU.
- If there is an open circuit in the one (front or rear) turn signal light, the other turn signal light blinks faster than usual in order to notify the rider of the problem.
- The hazard flasher system can be operated with the ignition switch turned ON.
- When the ignition switch is turned OFF while the hazard flasher system is operating, the system is continue operating until the hazard switch is turned off.
- Turn signal light line inspection (page 21-26)

SELF-CANCELLING TURN SIGNALS SYSTEM INSPECTION

Check the following:

– BCU DTC (page 21-26)
– Turn signal light (page 21-5)
– Left handlebar switch (page 21-17)
– Self-cancelling turn signals ON/OFF function [1]

If any parts are OK, replace the BCU (page 21-23)with a known good one and recheck.

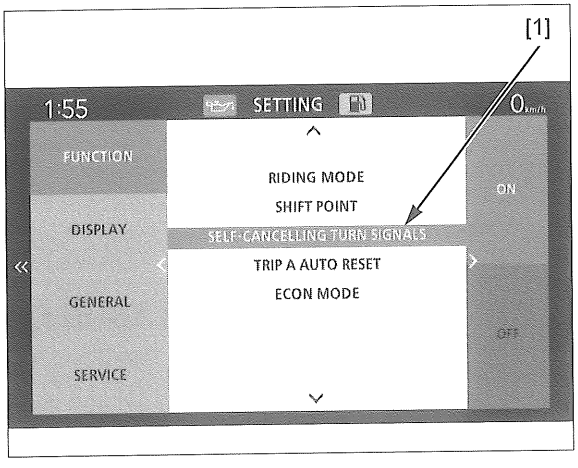

ESS SYSTEM INSPECTION (Except CH type)

NOTE:

- While the hazard system is operating, the ESS system will not operate.

Check the following:

– BCU DTC (page 21-26)
– Turn signal light (page 21-5)
– Brake light switch (page 21-20)and related circuit

NOTE:

- Even if any turn signal lights are abnormal, other normal turn signal lights will work with the ESS system.
- If the ESS system operates at all times, replace the ABS modulator and/or BCU with a new one.

To forcibly activate the ESS system, perform the procedure as follows:

1. Connect the SCS short connector to the DLC (page 4-6).
2. Turn the ignition switch ON.
3. Apply the front/rear brake lever and check the turn signal lights operation.

   The turn signal lights should be blinking with the brake applied and turning OFF with the brake released.

BRAKE/TAILLIGHT

REMOVAL/INSTALLATION

Remove the rear center lower cover (page 2-25).

Remove the socket bolts [1].

Disconnect the brake/taillight 3P (Black) connector [2].

Installation is in the reverse order of removal.

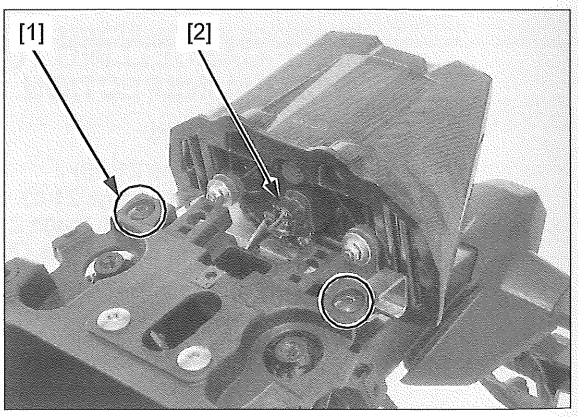

DISASSEMBLY/ASSEMBLY

Remove the nuts [1] and brake/taillight [2].

Remove the collars [3] and grommets [4] from the stay [5].

Assembly is in the reverse order of disassembly.

TORQUE: 5.0 N·m (0.5 kgf·m, 3.7 lbf·ft)

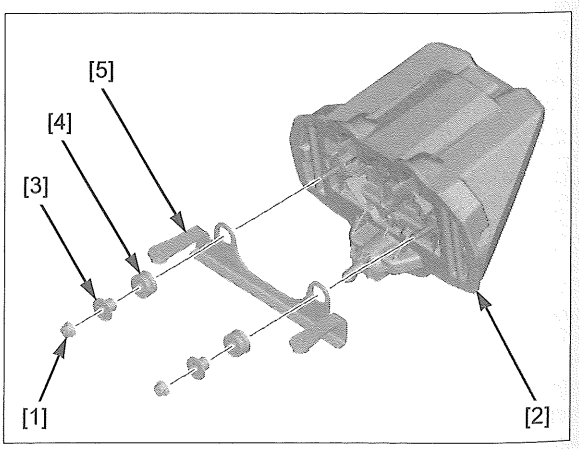

INSPECTION

Turn the ignition switch ON and Check the brake/ taillight operation.

Check that LED in the brake/taillight unit illuminate with the ignition switch turned ON.

Check that LED in the brake/taillight unit illuminate with the front brake lever and/or rear brake lever applied.

If any LED does not turn on, replace the brake/taillight assembly (page 21-6).

LICENSE LIGHT

REMOVAL/INSTALLATION

Remove the following:

- License light cover (page 2-28)
- Bolts [1]
- License light [2]
- Screws [3]
- Washers [4]
- Stay [5]
- Grommets [6]

Installation is in the reverse order of removal.

TORQUE:
License light screw: 2.0 N·m (0.2 kgf·m, 1.5 lbf·ft)

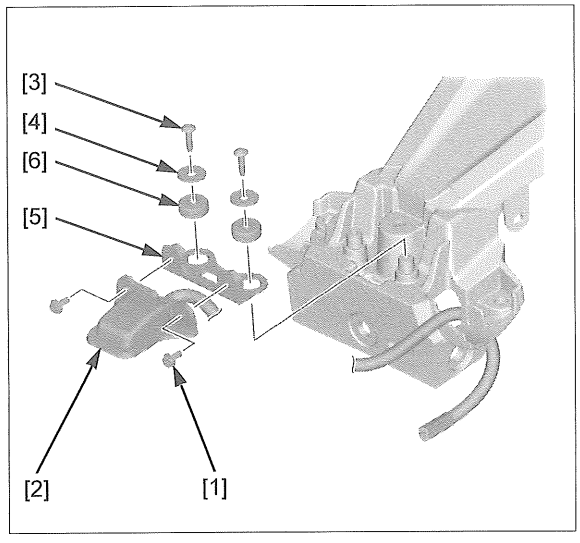

INSPECTION

Turn the ignition switch ON and check the license light operation.

Check that LED in the license light unit illuminate with the ignition switch turned ON.

If LED does not turn on, replace the license light unit (page 21-7).

COMBINATION METER

INITIAL OPERATION CHECK

When the ignition switch is turned ON, the combination meter will show opening display.

If the combination meter does not show opening display, check the combination meter power/ground line (page 21-8).

If the power/ground lines are normal, replace the meter print board (page 21-9).

REMOVAL/INSTALLATION

Refer to the holder meter cover disassembly/assembly (page 2-12).

POWER/GROUND LINE INSPECTION

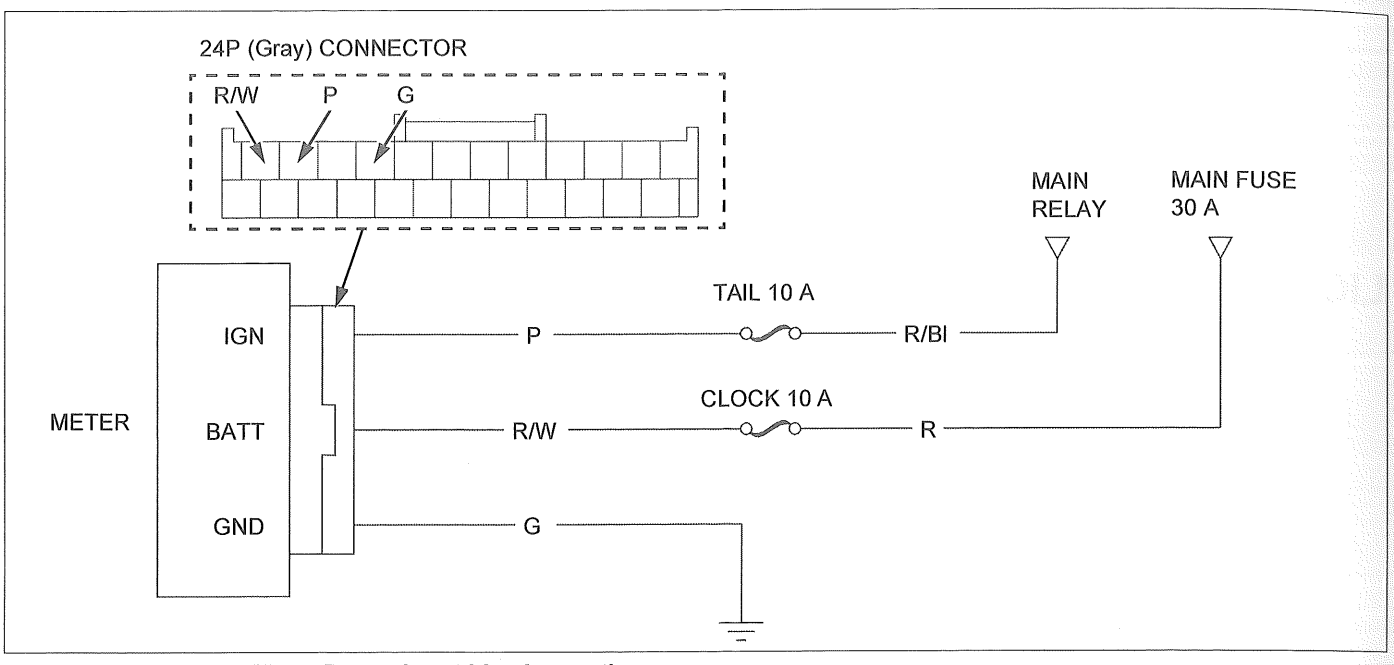

1. **Meter Power Input Line Inspection**

   Disconnect the combination meter 24P (Gray) connector (page 21-7).

   Turn the ignition switch ON.

   Measure the voltage between the wire harness side 24P (Gray) connector terminal and ground.

   CONNECTION: Pink (+) – Ground (–)
   STANDARD: Battery voltage

   Is there battery voltage?

   YES – GO TO STEP 2.

   NO – • Open circuit in the Pink wire
   • Blown sub fuse TAIL 10 A
   • Faulty main relay or its related circuit (page 21-22)

2. **Meter Back-up Voltage Line Inspection**

   Turn the ignition switch OFF.

   Measure the voltage between the wire harness side 24P (Gray) connector terminal and ground.

   CONNECTION: Red/white (+) – Ground (–)
   STANDARD: Battery voltage

   Is there battery voltage?

   YES – GO TO STEP 3.

   NO – • Open circuit in the Red/white wire
   • Blown sub fuse CLOCK 10 A

3. **Meter Ground Line Open Circuit Inspection**

   Check the continuity between the wire harness side 24P (Gray) connector terminal and ground.

   CONNECTION: Green – Ground

   Is there continuity?

   YES – Faulty meter print board

   NO – Open circuit in the Green wire

DISASSEMBLY/ASSEMBLY

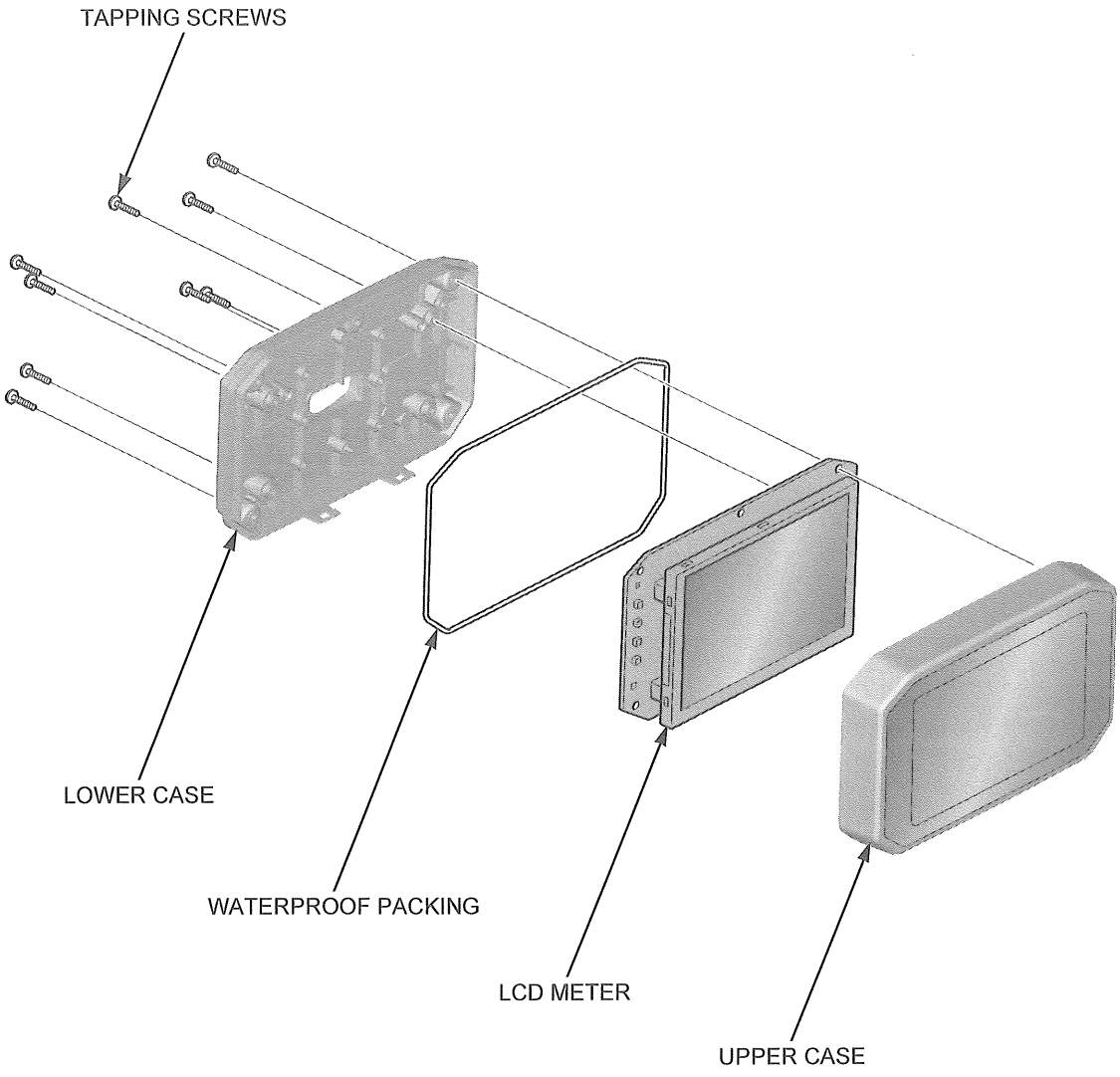

INDICATOR TROUBLESHOOTING

Before starting the troubleshooting, check the DTC (page 4-10).

When the meter shows the following symptoms, check the items in the following diagnosis procedure:

Meter function		Symptoms	Diagnosis procedure
ABS INDICATOR (LED)		Does not operate properly	• Check the ABS indicator circuit (page 19-11). • Replace the meter print board (page 21-9). • Replace the ABS modulator (page 19-25).
COOLANT TEMPERATURE INDICATOR		Turns on	• Coolant temperature is above 122°C or more.
		Does not operate properly	• Check the CAN communication line (page 4-50). • Replace the meter print board (page 21-9). • Replace the ECM (page 4-55).
ESL INDICATOR (LED)		Does not operate properly	• Check the ESL indicator circuit (page 22-3). • Replace the meter print board (page 21-9). • Replace the smart control unit (page 22-20).
FUEL RESERVE INDICATOR/FUEL METER		Does not operate properly	• Check the fuel level sensor (fuel pump unit) and its related circuit (page 21-15). • Replace the meter print board (page 21-9).
HIGH BEAM INDICATOR		Does not operate properly	• Check the CAN communication line (page 4-50). • Replace the meter print board (page 21-9). • Replace the BCU (page 21-23).
LOW OIL PRESSURE INDICATOR		Does not operate properly	• Check the EOP switch and related circuit (page 21-14). • Replace the meter print board (page 21-9).
MIL (LED)		Does not operate properly	• Check the CAN communication line (page 4-50). • Replace the meter print board (page 21-9). • Replace the ECM (page 4-55).
NEUTRAL INDICATOR (LED)		Does not operate properly	• Check the CAN communication line (page 4-50). • Replace the meter print board (page 21-9). • Replace the TCM (page 4-55).
PARKING BRAKE INDICATOR		Does not operate properly	• Check the parking brake switch and its related circuit (page 21-16). • Replace the meter print board (page 21-9).
SIDESTAND INDICATOR		Does not operate properly	• Check the CAN communication line (page 4-50). • Replace the meter print board (page 21-9). • Replace the ECM (page 4-55).
Honda SMART Key INDICATOR (LED)		Does not operate properly	• Check the Honda SMART Key indicator circuit (page 22-7). • Replace the meter print board (page 21-9). • Replace the smart control unit (page 22-20).
TORQUE CONTROL INDICATOR (LED)		Does not operate properly	• Check the CAN communication line (page 4-50). • Replace the meter print board (page 21-9). • Replace the TCM (page 4-55).
TORQUE CONTROL OFF INDICATOR (LED)		Does not operate properly	• Check the CAN communication line (page 4-50). • Replace the meter print board (page 21-9). • Replace the TCM (page 4-55).
TURN SIGNAL INDICATOR (LED)		Does not operate properly	• Check the CAN communication line (page 4-50). • Replace the meter print board (page 21-9). • Replace the BCU (page 21-23).
COOLANT TEMPERATURE		"---" blinks	• Coolant temperature is below 34°C.
		"122°C" or more blinks	• Coolant temperature is above 122°C or more.
		Does not operate properly	• Check the CAN communication line (page 4-50). • Replace the meter circuit board (page 21-9). • Replace the ECM (page 4-55).
OPEN AIR TEMPERATURE SENSOR		"---" blinks	• Open air temperature is below -12°C. • Replace the meter print board (page 21-9).
		"49°C" Blinks	• Open air temperature is above 49°C or more.
		Does not operate properly	• Check the open air temperature sensor and its related circuit (page 21-13). • Replace the meter print board (page 21-9).

Meter function	Symptoms	Diagnosis procedure
SHIFT INDICATOR	"–" blinks	• Check the CAN communication line (page 4-50). • Replace the meter print board (page 21-9). • Replace the TCM (page 4-55).
SPEEDOMETER	Speedometer displays "0 km/h" while riding	• Check the VS sensor and its related circuit (page 4-37). • Replace the meter print board (page 21-9).
TACHOMETER	Tachometer displays "0 r/min" while riding	• Check the CAN communication line (page 4-50). • Replace the meter print board (page 21-9). • Replace the ECM (page 4-55).

DATE & TIME SETTING PROCEDURE

Turn the ignition switch ON.

1. Push the select switch [1] to the right and hold it until the "SETTING" mode screen is displayed.
2. Press the select switch to the down to select the "GENERAL" menu, and press the select switch right.
3. Press the select switch to the down to select the DATE & TIME menu, and push the select switch to the down.
4. Push the select switch to the right.
   Press the select switch to the up or down to select the "12" or "24".

NOTE:

- When "24/12" is set to "24", "am/pm" menu is disable.

   Push the select switch to the left.

5. Select the YEAR menu, and push the select switch to the right.
   Set the desired year using the select switch to the up or down.
6. Select the MONTH-DAY menu, and set the desired month in the same manner as step 5.
   Push the select switch to the right.
   Set the desired day in the same manner as step 5.
   Push the select switch to the left 2 times.
7. Select the HOUR-MINUTE menu, and set the desired hour and minute in the same manner as step 6.
8. Select the "am/pm" menu, and select the "am" or "pm" in the same manner as step 4.
   Push and hold the select switch to the left to return the DATE & TIME menu.

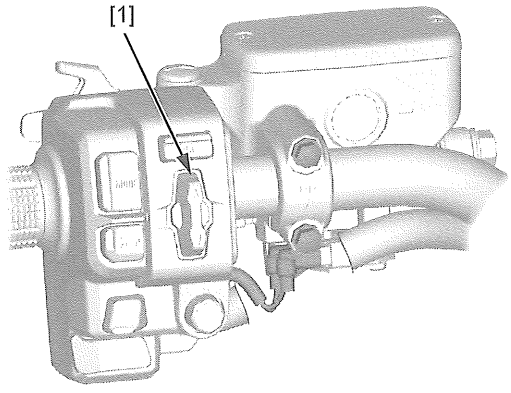

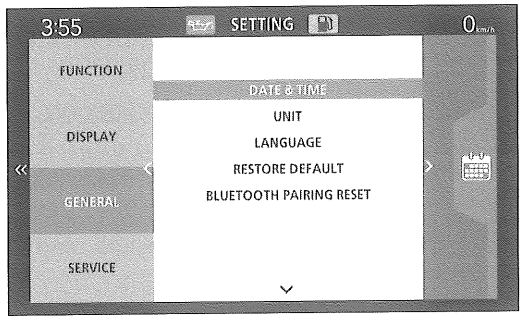

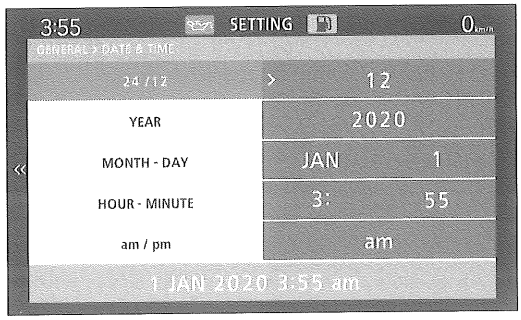

HSVCs (Honda Smartphone Voice Control system) (Except KO, CH types)

HSVCs SCREEN TRADITION

Turn the ignition switch ON.

Push the select switch [1] to the left and hold it until the "HSVCs" main screen is displayed.

Make sure the Bluetooth indicator [2] and smartphone indicator [3] are lit.

If the HSVCs main screen is not displayed or the indicators are not lit, check the following items.

- DTC detection (CAN communication related)
- Left handlebar switch resistance
- Initialization/pairing connection
- Defective combination meter or BCU

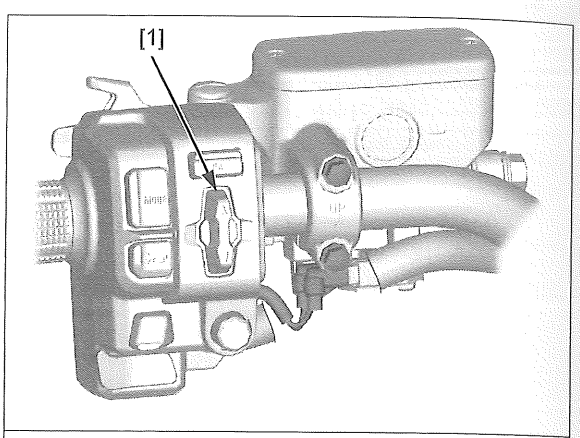

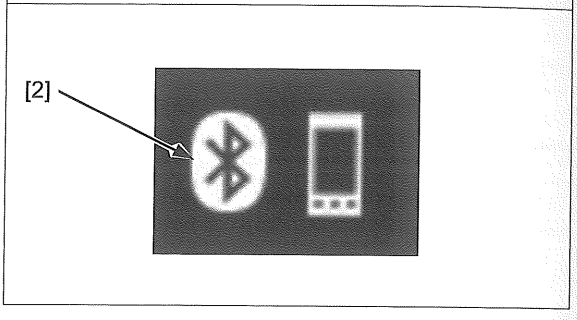

INITIALIZATION/PAIRING CONNECTION

Turn the ignition switch ON.

1. Push the select switch [1] to the right and hold it until the “SETTING” mode screen is displayed.
2. Press the select switch to the down to select the "GENERAL" menu, and press the select switch to the right.
3. Press the select switch to the down to select the “BLUETOOTH PAIRING RESET” menu, then press the select switch to the right.

   The “RESET” popup screen is displayed.

   Press the select switch to the right and hold until "FINISHED" is displayed.

   Press the select switch to the left or right to return to the "BLUETOOTH PAIRING RESET" screen.

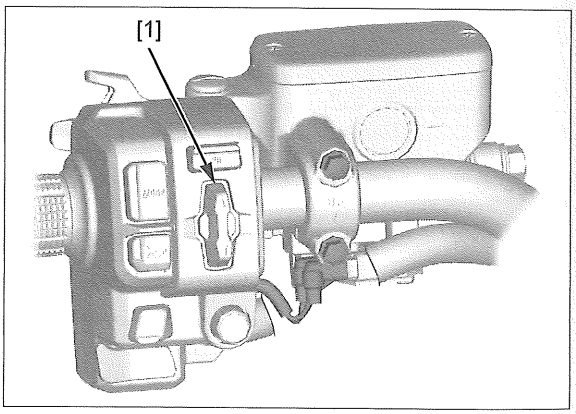

NOTE:

- After resetting, the SMART control unit waits for pairing connection for about 2 minutes and the Bluetooth indicator flashes.
- Depending on the connected smartphone, if you do not delete the pairing information on the smartphone side, it may not be successful in the waiting state for pairing connection for about 2 minutes. (Due to smartphone specifications)
- The Bluetooth and smartphone indicators are lit when the pairing connection is successful.

OPEN AIR TEMPERATURE SENSOR

REMOVAL/INSTALLATION

Remove the right front side cowl (page 2-15).

Disconnect the open air temperature sensor 2P (Black) connector [1].

Remove the screw [2] and open air temperature sensor [3].

Installation is in the reverse order of removal.

TORQUE: 1.0 N·m (0.1 kgf·m, 0.7 lbf·ft)

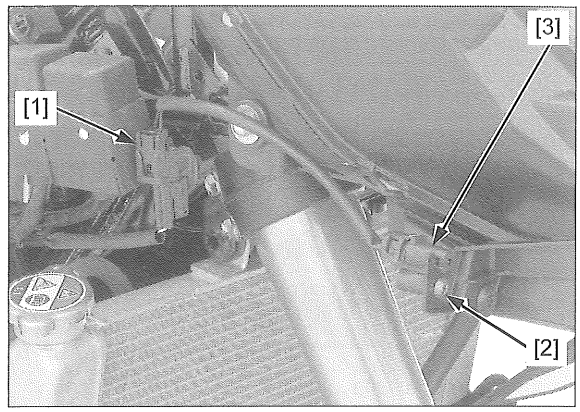

INSPECTION

Disconnect the open air temperature sensor 2P (Black) connector (page 21-13).

Measure the resistance between the open air temperature sensor 2P (Black) connector [1] of the sensor side.

Standard: 4.9 – 5.1 kΩ (25°C/77°F)

Replace the open air temperature sensor if it is out of specification (page 21-13).

If the resistance is within standard, check for open circuit in the Beige and White wire between the combination meter and open air temperature sensor.

If the wires are OK, replace the meter print board (page 21-9).

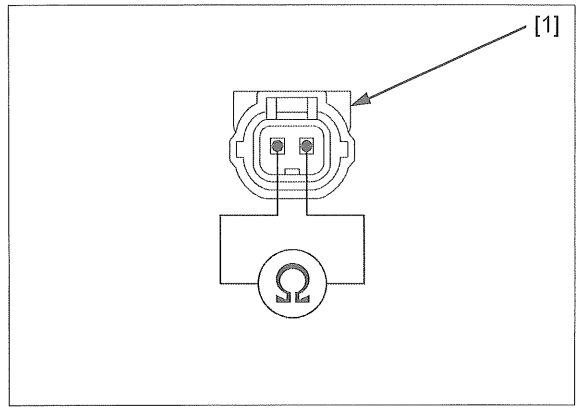

ENGINE OIL PRESSURE INDICATOR/ EOP SWITCH

EOP SWITCH REMOVAL/ INSTALLATION

Drain the engine oil (page 3-10).

Remove the radiator reserve tank (page 8-12).

Disconnect the EOP switch 1P (Gray) connector [1].

Remove the EOP switch [2] from the crankcase.

Installation is in the reverse order of removal.

TORQUE:
EOP switch:
18 N·m (1.8 kgf·m, 13 lbf·ft)

NOTE:

- Apply sealant (TB1207B manufactured by ThreeBond or equivalent) to the EOP switch threads as shown.
- Route the wire properly (page 1-20).

Fill the engine oil with the recommended engine oil (page 3-10).

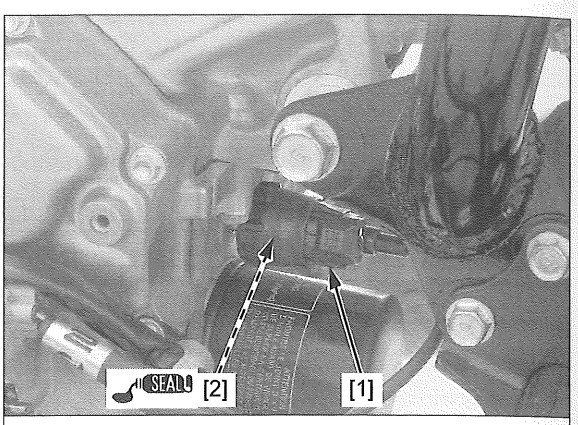

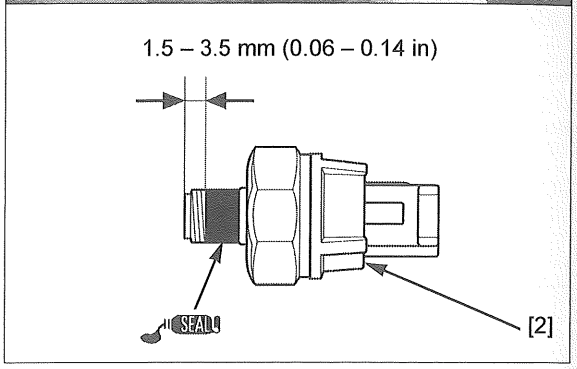

SYSTEM INSPECTION

The engine oil pressure indicator comes on when the ignition switch is turned ON, then goes off when the engine starts.

If the engine oil pressure indicator does not come on with the ignition switch turned ON, check the combination meter initial operation (page 21-7).

The engine oil pressure indicator does not go out when the engine running, check the following:

– Engine oil level (page 3-9)
– Engine oil pressure (page 9-4)
– EOP switch line short circuit (page 21-14)

If the above items are OK, replace the meter circuit board (page 21-7).

EOP SWITCH LINE SHORT CIRCUIT INSPECTION

Disconnect the EOP switch 1P (Gray) connector (page 21-14).

Check for continuity between the EOP switch 1P (Gray) connector terminal and ground.

– If there is continuity, the Light green wire has a short circuit.
– If there is no continuity, replace the EOP switch with a known good one (page 21-14)and recheck.

FUEL LEVEL SENSOR

FUEL METER INSPECTION

If the fuel meter displays the circuit faulty pattern as shown with ignition switch is ON, check for open or short circuit in the Black/green wire between the combination meter and fuel pump unit.

If the Black/green wire is OK, check the fuel level sensor (page 21-15).

If the fuel level sensor is OK, replace the combination meter (page 21-7).

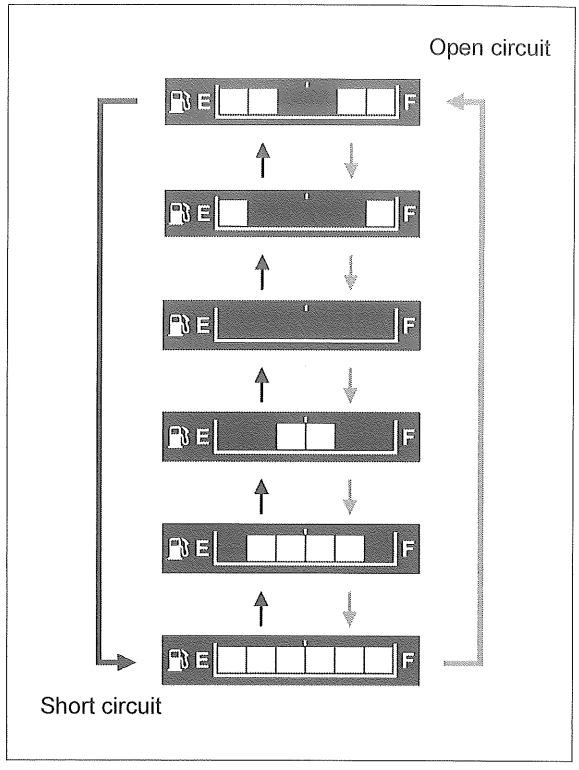

FUEL LEVEL SENSOR INSPECTION

Remove the fuel pump unit (page 7-7).

Connect an ohmmeter to the fuel pump unit 5P (Black) connector [1] terminals.

Measure the resistance with the float [2] at the full and empty positions.

	FULL	EMPTY
Resistance	7 – 11 Ω	384 – 396 Ω

If it is out of specification, replace the fuel pump unit.

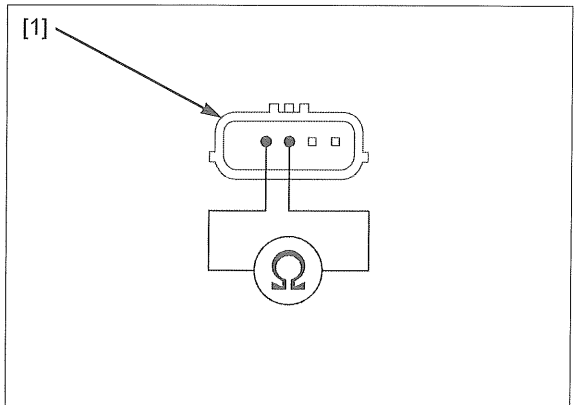

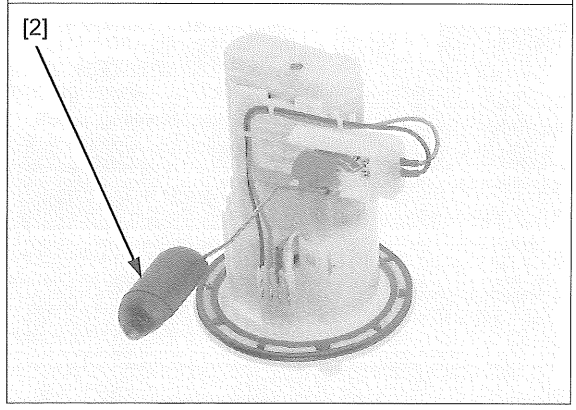

PARKING BRAKE INDICATOR/SWITCH

PARKING BRAKE SWITCH REMOVAL/ INSTALLATION

Remove the parking brake cover (page 18-22).

Remove the screw [1] and parking brake switch [2].

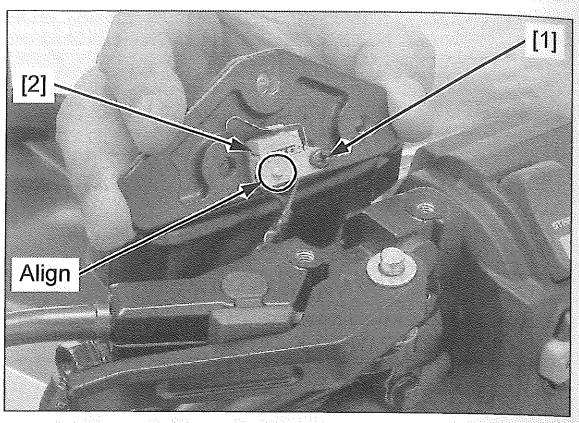

Remove the wire bands [1].

Disconnect the parking brake switch 2P (Black) connector [2].

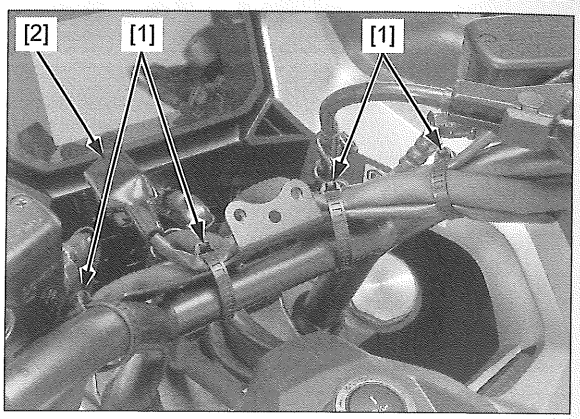

Installation is in the reverse order of removal.

TORQUE: 0.4 N·m (0.1 kgf·m, 0.3 lbf·ft)

NOTE:

- Align the switch boss with the cap hole.
- Route the wire properly (page 1-20).

SYSTEM INSPECTION

If the parking brake indicator does not operate properly, check the parking brake switch (page 21-17).

If the parking brake switch is normal, check the parking brake switch line as follows:

Disconnect the parking brake switch 2P (Black) connector [1] (page 21-16).

Connect the wire side connector terminals with a jumper wire.

The parking brake indicator should come on with the ignition switch turned ON.

- If the indicator comes on, replace the meter print board (page 21-9).
- If the indicator does not come on, check for open circuit in the following wires:
  - Black wire between the harness side 2P (Black) connector and combination meter 24P (Gray) connector [2]
  - Green wire between the harness side 2P (Black) connector and ground
- If the wires are OK, replace the meter print board (page 21-9).

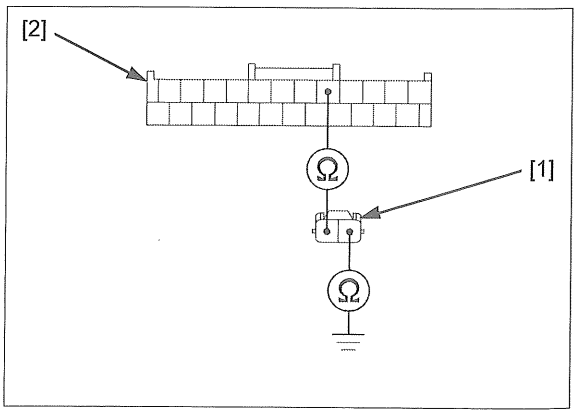

PARKING BRAKE SWITCH INSPECTION

Disconnect the parking brake switch 2P (Black) connector (page 21-16).

Check for continuity between the switch side 2P (Black) connector terminals.

There should be continuity with the parking brake lever pulled and no continuity with the lever returned inside fully.

If the parking brake switch does not operate properly, replace the switch.

HANDLEBAR SWITCHES

REMOVAL/INSTALLATION

Remove the handlebar switch from the handlebar (page 16-4).

Remove the step panel/side panel (page 2-18).

Remove the left handlebar switch wire clip [1] and right handlebar switch wire clips [2].

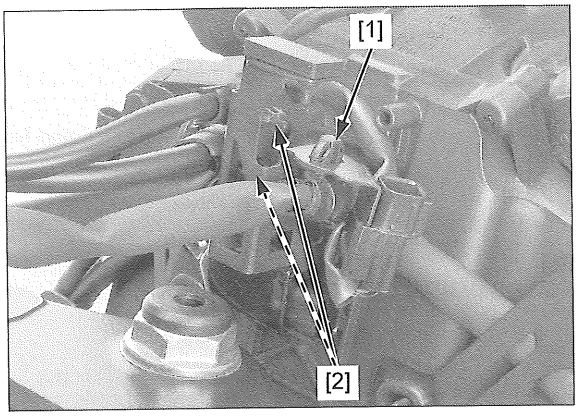

Remove the clip [1] and stay [2].

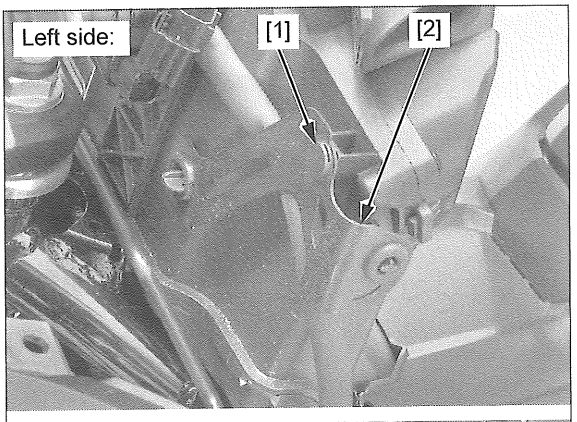

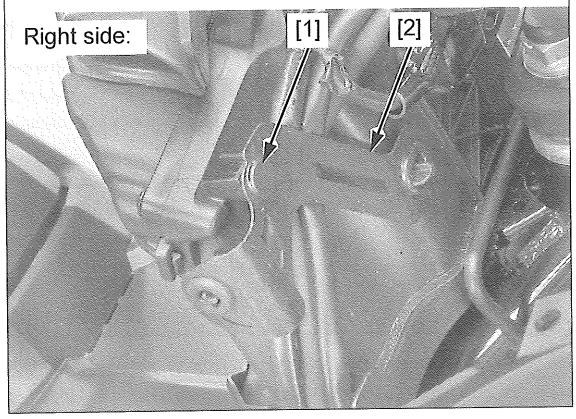

Left side: Remove the wire band [1] and wire clip [2].

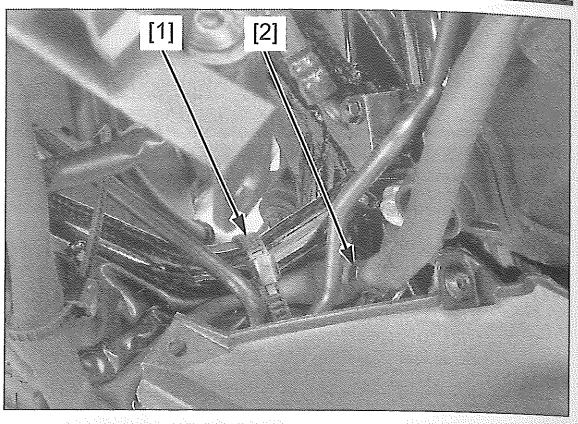

Remove the socket bolts [1] and open the cover [2].

Remove the left handlebar switch wire clips [3].

Remove and disconnect the left handlebar switch connectors.

- 8P (Black) [4]
- 2P (Gray) [5]

Remove the wire band [6] and left handlebar switch.

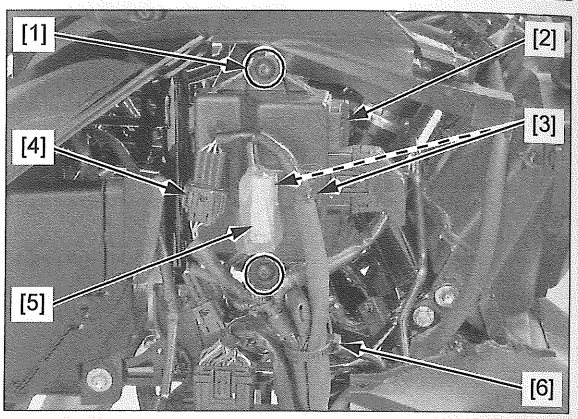

Right side: Remove the wire clip [1].

Remove and disconnect the right handlebar switch connectors.

- 8P (Black) (DCT) [2]
- 8P (Black) (GRIP APS) [3]
- 8P (Gray) [4]

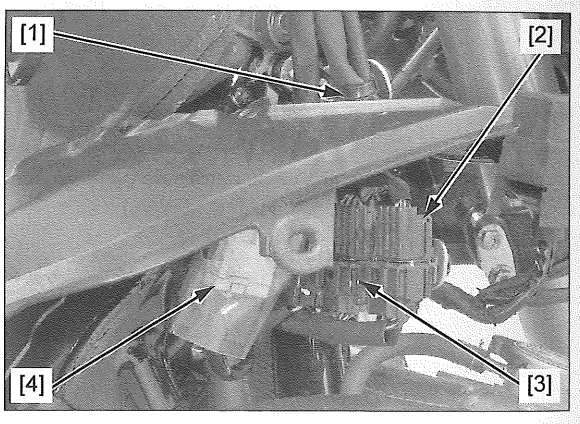

INSPECTION

Remove the front side cowls (page 2-15).

Disconnect the following:

- Left handlebar switch 8P (Black) connector [1]
- Right handlebar switch 8P (Gray) connector [2]
- Right handlebar switch 8P (Black) connector [3]

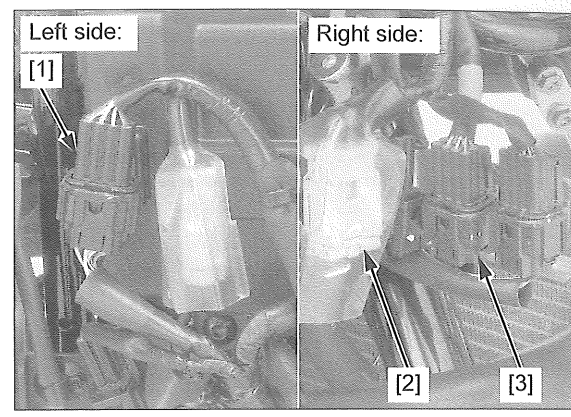

RIGHT SIDE:

Check for continuity between the wire terminals of the handlebar switch connector in each switch position.

Refer to the wiring diagram for the terminals and switch status (page 23-2).

LEFT SIDE:

Measure the resistance between the switch side 8P (Black) connector [1] terminals when each switch is operated.

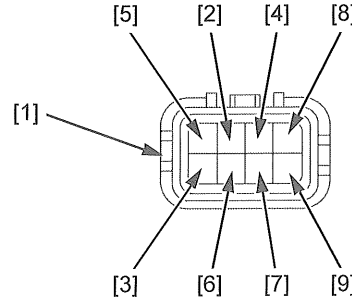

CONNECTION:	STANDARD (at 25°C/77°F):	
White [2] – Green/blue [3]	Headlight dimmer switch:	90 – 110 Ω
	Passing light control switch:	340 – 380 Ω
White/blue [4] – Green/blue [3]	MODE switch:	90 – 110 Ω
	Select switch (up):	330 – 380 Ω
	Select switch (down):	730 – 820 Ω
White/green [5] – Green/blue [3]	Horn switch:	90 – 110 Ω
	Fn switch:	330 – 380 Ω
	Select switch (left):	730 – 820 Ω
	Select switch (right):	1.6 – 1.8 kΩ
White/yellow [6] – Green/blue [3]	Turn signal left switch:	730 – 820 Ω
	Turn signal right switch:	1.6 – 1.8 kΩ
	Turn signal cancel switch:	330 – 380 Ω
	Hazard switch (Except CH type) Lighting switch (CH type)	90 – 110 Ω
Black [7] – Green/white [8]	Shift up switch (+):	There should be continuity only when the switch is pushed.
Blue [9] – Green/white [8]	Shift down switch (–):	

Replace the left handlebar switch if any switch resistance are not standard value.

BRAKE LIGHT SWITCH

INSPECTION

Remove the handle rear cover (page 2-9).

FRONT

Disconnect the front brake light switch [1] connectors and check for continuity between the terminals.

There should be continuity with the brake lever applied, and there should be no continuity with the brake lever released.

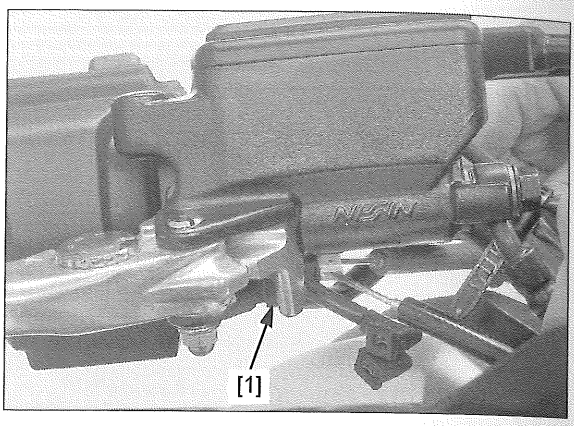

REAR

Disconnect the rear brake light switch [1] connectors and check for continuity between the terminals.

There should be continuity with the brake lever applied, and there should be no continuity with the brake lever released.

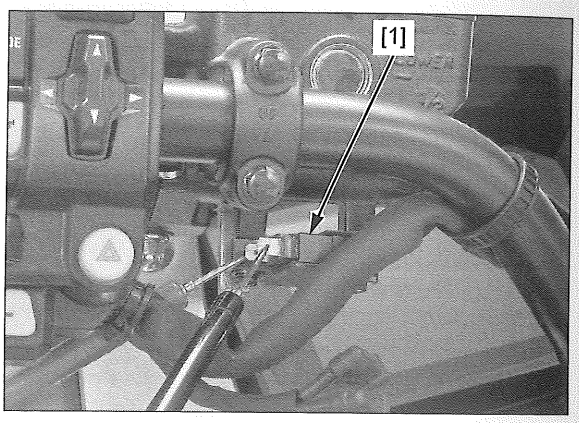

HORN

REMOVAL/INSTALLATION

Remove the front lower cover (page 2-13).

Disconnect the horn connectors [1].

Remove the flange bolt [2], horn [3] and cover [4].

Installation is in the reverse order of removal.

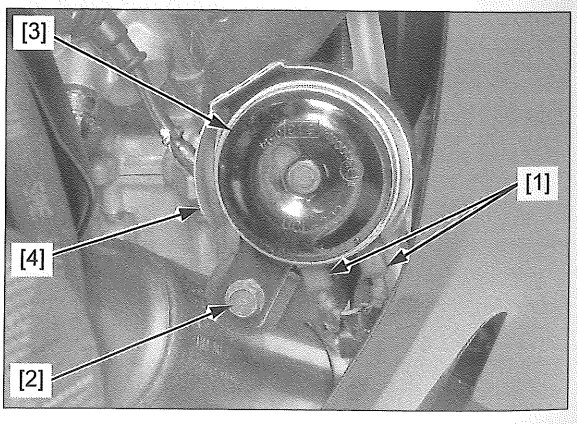

INSPECTION

Disconnect the wire connectors [1] from the horn.

Connect a 12 V battery to the horn terminal directly.

The horn is normal if it sounds when the 12 V battery is connected across the horn terminals.

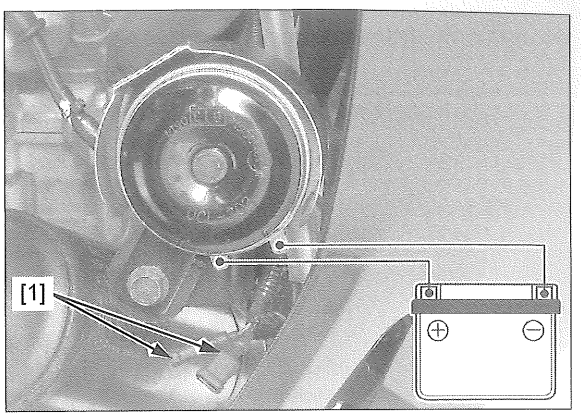

USB CHARGER UNIT

REMOVAL/INSTALLATION

Remove the rear fender B (page 2-30).

Open the seat.

Disconnect the USB charger unit 2P (Black) connector [1].

Release the tab [2] and remove the USB charger unit [3].

Installation is in the reverse order of removal.

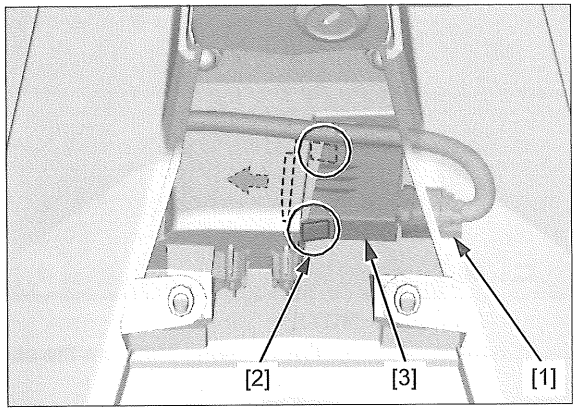

INSPECTION

Disconnect the USB charger unit 2P (Black) connector (page 21-21).

Measure the voltage between the wire harness side 2P (Black) connector [1] terminals.

CONNECTION: Black/red (+) – Green (–)
STANDARD: Battery voltage

There should be battery voltage with the ignition switch turned ON.

If there is no battery voltage, check the following:

- Open circuit in the Black/red or Green wire
- Blown sub fuse HORN 10 A
- Faulty main relay or its related circuit (page 21-22)

If battery voltage exist, replace the USB charger unit.

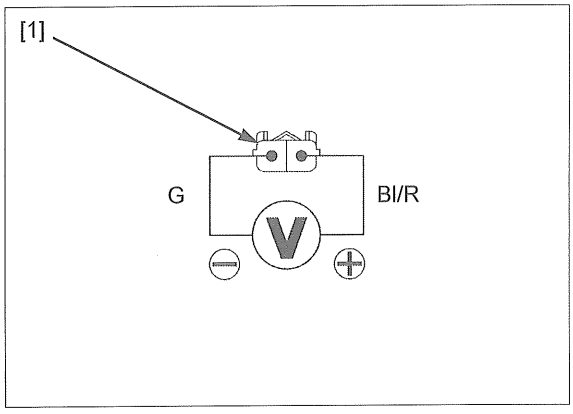

LUGGAGE BOX LIGHT/LUGGAGE BOX LIGHT SWITCH

REMOVAL/INSTALLATION

LUGGAGE BOX LIGHT

Refer to the luggage box removal/installation (page 2-26).

LUGGAGE BOX LIGHT SWITCH

Remove the luggage box (page 2-26).

Disconnect the luggage box light switch 2P (Black) connector [1].

Remove the screw [2], nut [3] and luggage box light switch [4].

Remove the seat lock cable [5].

Remove the seat lock mounting bolts [6] and seat lock [7].

Installation is in the reverse order of removal.

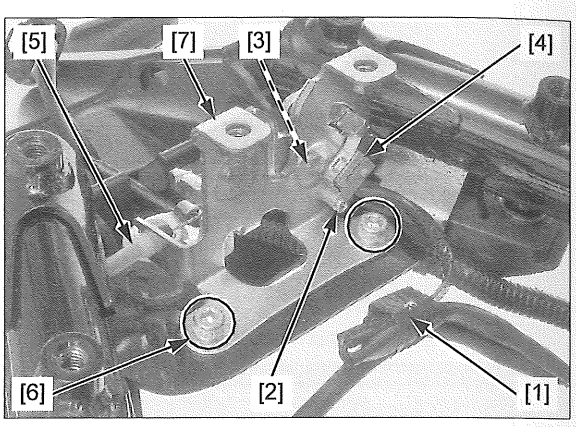

INSPECTION

Refer to the parking brake switch inspection (page 21-17).

RELAY

NOTE:

- The following parts are the same:
  - DCT relay
  - Fan control relay
  - Main relay
  - Fuel pump relay
  - Engine stop relay
  - TBW relay
  - Start relay
  - Sub VB relay

REMOVAL/INSTALLATION

DCT/fan control/main/fuel pump relay

Remove the left rear cowl (page 2-25).

Remove the fuse box cover [1].

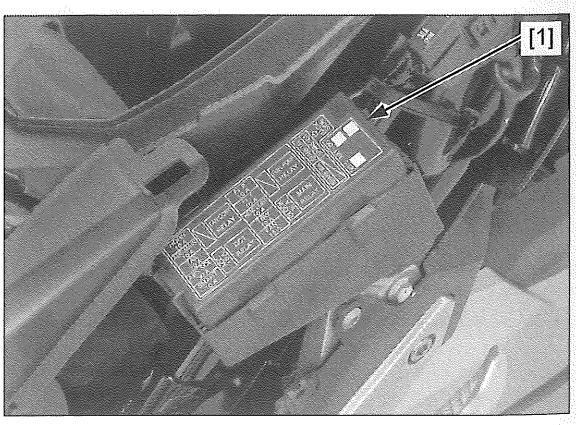

Remove the relay.

- DCT [1]
- Fan control [2]
- Main [3]
- Fuel pump [4]

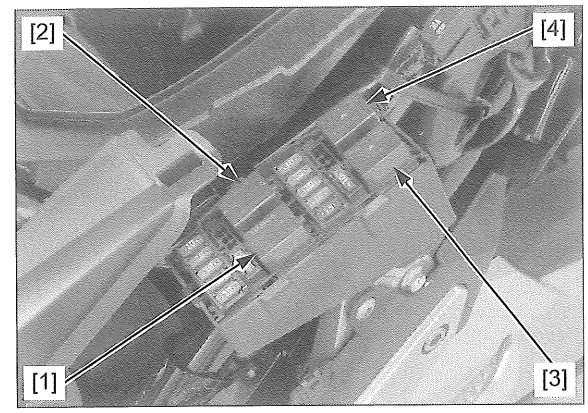

Engine stop/TBW/start/sub VB relay

Remove the right inner cover (page 2-11).

Remove the relay covers [1].

Remove the relay.

- Engine stop [2]
- TBW [3]
- Start [4]
- Sub VB [5]

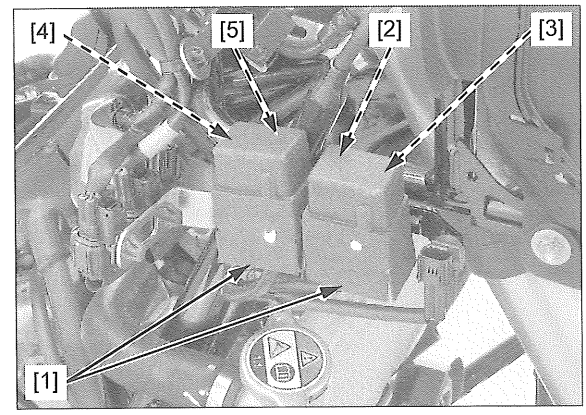

INSPECTION

Connect an ohmmeter to the relay [1] terminals.

Connect a 12 V battery [2] to the relay terminals as shown.

There should be continuity only when the 12 V battery is connected.

If there is no continuity when the 12 V battery is connected, replace the option relay.

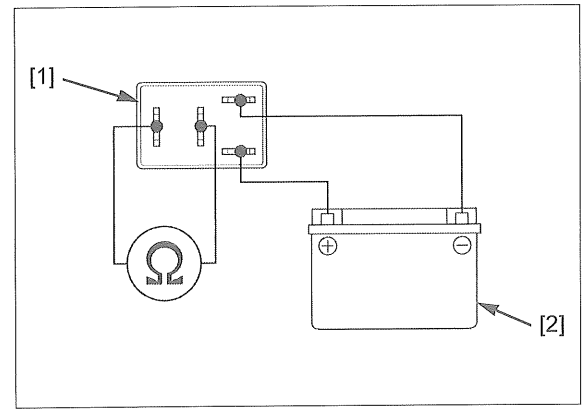

BCU

REMOVAL/INSTALLATION

Remove the left front side cowl (page 2-15).

Disconnect the BCU 39P (Black) connector [1].

Remove the socket bolts [2] and BCU/cover assembly [3].

Release the tab [4] and open the BCU cover [5].

Remove the BCU [6].

Installation is in the reverse order of removal.

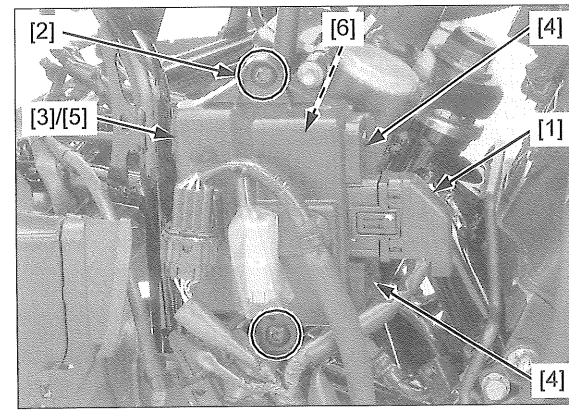

POWER/GROUND LINE INSPECTION

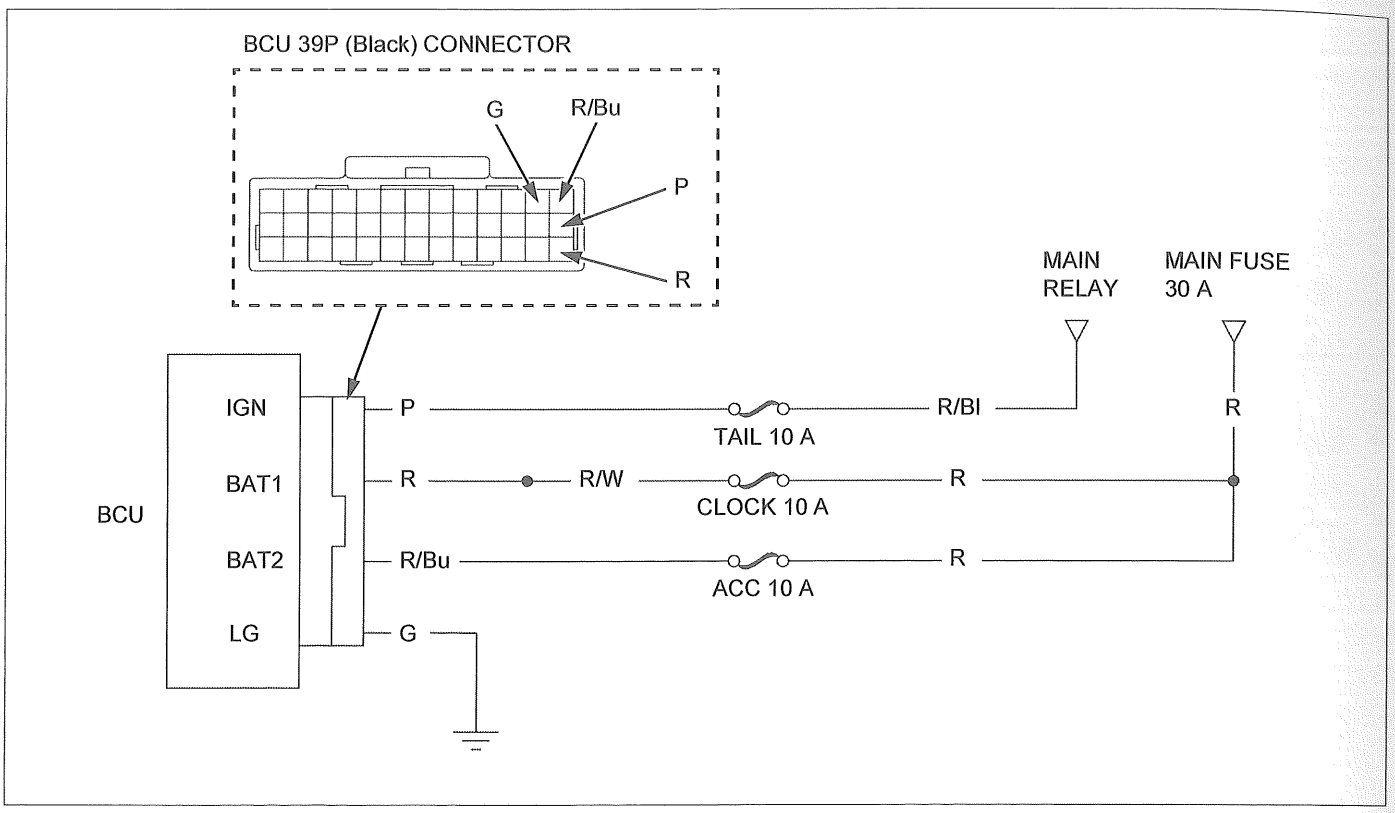

1. BCU Power Input Line Inspection

Disconnect the BCU 39P (Black) connector (page 21-23).

Turn the ignition switch ON.

Measure the voltage between the wire harness side 39P (Black) connector terminal and ground.

TOOL:
Test probe **07ZAJ-RDJA110**

CONNECTION: Pink (+) – Ground (–)
STANDARD: Battery voltage

Is there battery voltage?

YES – GO TO STEP 2.

NO – • Open circuit in the Pink wire
• Blown sub fuse TAIL 10 A
• Faulty main relay or its related circuit (page 21-22)

2. **BCU Back-up Voltage Line Inspection**

Turn the ignition switch OFF.

Measure the voltage between the wire harness side 39P (Black) connector terminal and ground.

TOOL:
Test probe **07ZAJ-RDJA110**

CONNECTION:
Back-up 1: Red (+) – Ground (–)
Back-up 2: Red/blue (+) – Ground (–)
STANDARD: Battery voltage

Is there battery voltage?

YES – GO TO STEP 3.

NO –
- Back-up 1 side:
  - Open circuit in the Red or Red/white wire
  - Blown sub fuse CLOCK 10 A
- Back-up 2 side:
  - Open circuit in the Red/blue wire
  - Blown sub fuse ACC 10 A

3. **BCU Ground Line Open Circuit Inspection**

Check the continuity between the wire harness side 39P (Black) connector terminal and ground.

TOOL:
Test probe **07ZAJ-RDJA110**

CONNECTION: Green – Ground

Is there continuity?

YES – Faulty BCU

NO – Open circuit in the Green wire

BODY CONTROL SYSTEM TROUBLESHOOTING INFORMATION

MCS INFORMATION

Refer to the PGM-FI system (page 4-6).

DTC READOUT

NOTE:

- If the MIL blinks, check the PGM-FI DTC (page 4-6). If there is any problem in the PGM-FI system, troubleshoot it first. Then recheck the body control system after erasing the PGM-FI DTC.

Test-ride the motorcycle and read the current DTC with the MCS or combination meter. (Do not turn the ignition switch OFF after test-riding).

Follow the BCU DTC index (page 21-28).

CIRCUIT INSPECTION

INSPECTION AT BCU CONNECTOR

- Always clean around and keep any foreign material away from the BCU 39P connector before disconnecting it.
- A faulty body control system is often related to poorly connected or corroded terminals. Check those connections before proceeding.
- In testing at BCU 39P connector (wire harness side) terminal, always use the test probe [1]. Insert the test probe into the connector terminal, then attach the digital multimeter probe to the test probe.

TOOL:

Test probe	**07ZAJ-RDJA110**

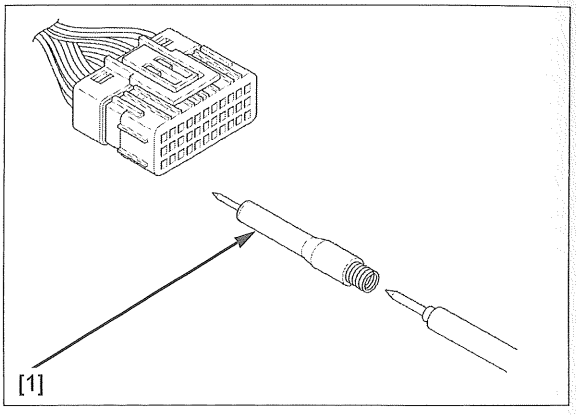

BODY CONTROL SYSTEM DIAGRAM

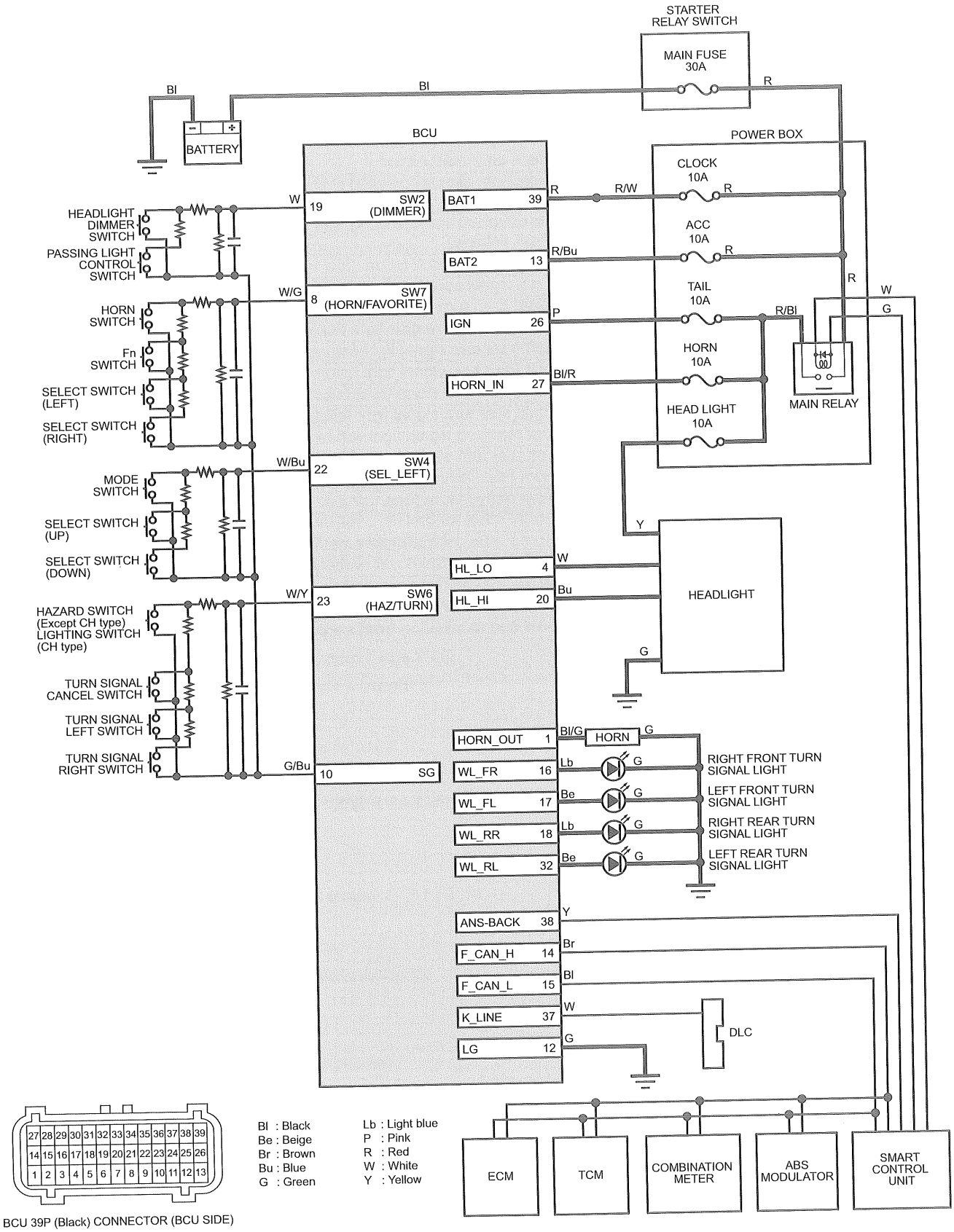

27	28	29	30	31	32	33	34	35	36	37	38	39	
14	15	16	17	18	19	20	21	22	23	24	25	26	
1	2	3	4	5	6	7	8	9	10	11	12	13	

BCU 39P (Black) CONNECTOR (BCU SIDE)

Bl : Black
Be : Beige
Br : Brown
Bu : Blue
G : Green
Lb : Light blue
P : Pink
R : Red
W : White
Y : Yellow

BODY CONTROL SYSTEM DTC INDEX

Meter displays	Honda code	DTC	MIL blinks	DTC name	Refer to page
B1	1-1	–	–	Ignition power failure (low voltage)	21-29
	1-2	–	–	Ignition power failure (high voltage)	21-29
B3	3-1	–	–	Back-up 1 failure (low voltage)	21-30
	3-2	–	–	Back-up 1 failure (high voltage)	21-30
B4	4-1	–	–	Back-up 2 failure (low voltage)	21-31
	4-2	–	–	Back-up 2 failure (high voltage)	21-31
	4-3	–	–	Back-up 2 malfunction	21-32
B11	11-1	–	–	Headlight dimmer/passing light control switch failure (low voltage)	21-33
	11-2	–	–	Headlight dimmer/passing light control switch failure (high voltage)	21-34
B12	12-1	–	–	Turn signal switch failure (low voltage)	21-35
	12-2	–	–	Turn signal switch failure (high voltage)	21-36
B21	21-1	–	–	Right front turn signal light failure (short circuit)	21-37
	21-2	–	–	Right front turn signal light failure (open circuit)	21-38
B22	22-1	–	–	Left front turn signal light failure (short circuit)	21-37
	22-2	–	–	Left front turn signal light failure (open circuit)	21-38
B23	23-1	–	–	Right rear turn signal light failure (short circuit)	21-37
	23-2	–	–	Right rear turn signal light failure (open circuit)	21-38
B24	24-1	–	–	Left rear turn signal light failure (short circuit)	21-37
	24-2	–	–	Left rear turn signal light failure (open circuit)	21-38
B35	35-1	–	–	Horn relay failure (short circuit)	21-39
	35-2	–	–	Horn relay failure (open circuit)	21-39
B81	81-1	–	–	Horn/Fn/Sel left/Sel right switch failure (low voltage)	21-40
	81-2	–	–	Horn/Fn/Sel left/Sel right switch failure (high voltage)	21-41
B82	82-1	–	–	MODE/Sel up/Sel down switch failure (short circuit)	21-42
	82-2	–	–	MODE/Sel up/Sel down switch failure (open circuit)	21-43
B91	101-2	–	–	BCU EEPROM malfunction	21-43
B93	103-1	U0001	103	CAN communication malfunction	4-50
	103-2				
	103-3				

BODY CONTROL SYSTEM DTC TROUBLESHOOTING

NOTE:

- Before starting the troubleshooting, check for loose or poor contact in the BCU related circuit.

DTC B1 IGNITION POWER FAILURE

DTC B1 (1-1) IGNITION POWER FAILURE (LOW VOLTAGE)

Probable cause:

- Faulty battery or its related circuit
- Blown sub fuse HORN 10 A
- Charging system malfunction
- Faulty BCU or its power/ground line

Symptom/Fail-safe function:

- Body control system works normally

1. **Recheck DTC**

   Read the DTC.

   Is the DTC B1 (1-1) indicated?

   YES – GO TO STEP 2.

   NO – Intermittent failure

2. **BCU power/ground line Inspection**

   Check the BCU power/ground line (page 21-24).

   Is the power/ground line normally?

   YES – GO TO STEP 3.

   NO – Repair the faulty parts.

3. **Charging System Inspection**

   Check the charging system (page 20-6).

   Is the charging system normally?

   YES – Faulty BCU

   NO – Repair the faulty parts.

DTC B1 (1-2) IGNITION POWER FAILURE (HIGH VOLTAGE)

Probable cause:

- Faulty battery
- Charging system malfunction
- Faulty BCU

Symptom/Fail-safe function:

- Body control system works normally

1. **Recheck DTC**

   Read the DTC.

   Is the DTC B1 (1-2) indicated?

   YES – GO TO STEP 2.

   NO – Intermittent failure

2. **Charging System Inspection**

   Check the charging system (page 20-6).

   Is the charging system normally?

   YES – Faulty BCU

   NO – Repair the faulty parts.

DTC B3 BACK-UP 1 FAILURE

DTC B3 (3-1) BACK-UP 1 FAILURE (LOW VOLTAGE)

Probable cause:

- Faulty battery or its related circuit
- Blown sub fuse CLOCK 10 A
- Charging system malfunction
- Faulty BCU or its power/ground line

Symptom/Fail-safe function:

- Headlight/turn signal light works normally

1. **Recheck DTC**

   Read the DTC.

   Is the DTC B3 (3-1) indicated?

   YES – GO TO STEP 2.

   NO – Intermittent failure

2. **BCU power/ground line Inspection**

   Check the BCU power/ground line (page 21-24).

   Is the power/ground line normally?

   YES – GO TO STEP 3.

   NO – Repair the faulty parts.

3. **Charging System Inspection**

   Check the charging system (page 20-6).

   Is the charging system normally?

   YES – Faulty BCU

   NO – Repair the faulty parts.

DTC B3 (3-2) BACK-UP 1 FAILURE (HIGH VOLTAGE)

Probable cause:

- Faulty battery
- Charging system malfunction
- Faulty BCU

Symptom/Fail-safe function:

- Headlight/turn signal light does not work

1. **Recheck DTC**

   Read the DTC.

   Is the DTC B3 (3-2) indicated?

   YES – GO TO STEP 2.

   NO – Intermittent failure

2. **Charging System Inspection**

   Check the charging system (page 20-6).

   Is the charging system normally?

   YES – Faulty BCU

   NO – Repair the faulty parts.

DTC B4 BACK-UP 2 FAILURE

DTC B4 (4-1) BACK-UP 2 FAILURE (LOW VOLTAGE)

Probable cause:

- Faulty battery or its related circuit
- Blown sub fuse ACC 10 A
- Charging system malfunction
- Faulty BCU or its power/ground line

1. **Recheck DTC**

   Read the DTC.

   Is the DTC B4 (4-1) indicated?

   YES – GO TO STEP 2.

   NO – Intermittent failure

2. **BCU power/ground line Inspection**

   Check the BCU power/ground line (page 21-24).

   Is the power/ground line normally?

   YES – GO TO STEP 3.

   NO – Repair the faulty parts.

3. **Charging System Inspection**

   Check the charging system (page 20-6).

   Is the charging system normally?

   YES – Faulty BCU

   NO – Repair the faulty parts.

DTC B4 (4-2) BACK-UP 2 FAILURE (HIGH VOLTAGE)

Probable cause:

- Faulty battery
- Charging system malfunction
- Faulty BCU

1. **Recheck DTC**

   Read the DTC.

   Is the DTC B4 (4-2) indicated?

   YES – GO TO STEP 2.

   NO – Intermittent failure

2. **Charging System Inspection**

   Check the charging system (page 20-6).

   Is the charging system normally?

   YES – Faulty BCU

   NO – Repair the faulty parts.

DTC B4 (4-3) BACK-UP 2 FAILURE

Probable cause:

- Faulty battery
- Charging system malfunction
- Faulty BCU

1. **Recheck DTC**

   Read the DTC.

   Is the DTC B4 (4-3) indicated?

   YES – GO TO STEP 2.

   NO – Intermittent failure

2. **Charging System Inspection**

   Check the charging system (page 20-6).

   Is the charging system normally?

   YES – Faulty BCU

   NO – Repair the faulty parts.

DTC B11 HEADLIGHT DIMMER/ PASSING LIGHT CONTROL SWITCH FAILURE

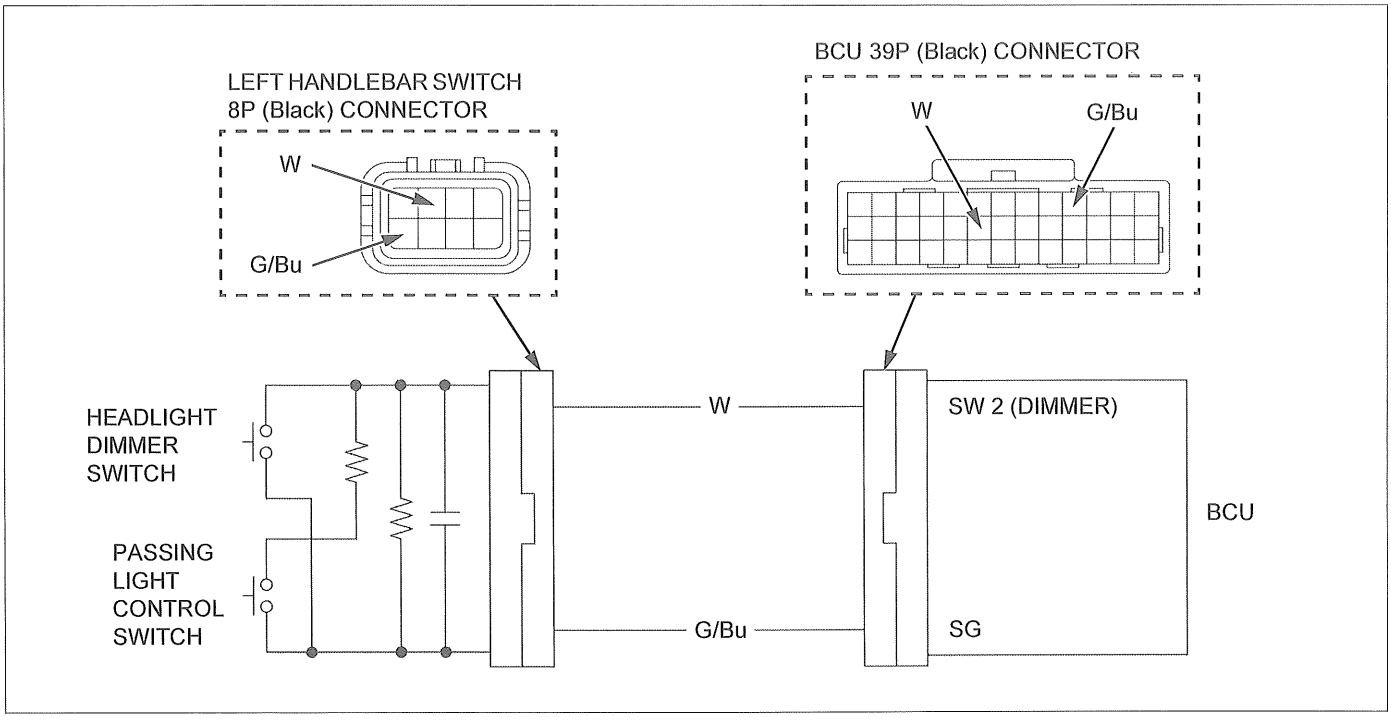

DTC B11 (11-1)
HEADLIGHT DIMMER/PASSING LIGHT CONTROL SWITCH FAILURE (LOW VOLTAGE)

Probable cause:

- Short circuit in the related wire
- Faulty switch
- Faulty BCU

Symptom/Fail-safe function:

- Headlight works normally

1. **Recheck DTC**

   Read the DTC.

   Is the DTC B11 (11-1) indicated?

   YES – GO TO STEP 2.

   NO – Intermittent failure

2. **Headlight Dimmer/Passing Light Control Switch Line Short Circuit Inspection**

   Disconnect the BCU 39P (Black) connector (page 21-23).

   Check for continuity between the BCU 39P (Black) connector and ground.

   CONNECTION: White – Ground

   Is there continuity?

   YES – Short circuit in the White wire

   NO – • Faulty left handlebar switch (headlight dimmer/passing light control switch)
   • Faulty BCU

DTC B11 (11-2)
HEADLIGHT DIMMER/PASSING LIGHT CONTROL SWITCH FAILURE (HIGH VOLTAGE)

Probable cause:

- Open circuit in the related wire
- Faulty switch
- Faulty BCU

Symptom/Fail-safe function:

- Headlight works normally

1. **Recheck DTC**

   Read the DTC.

   Is the DTC B11 (11-2) indicated?

   YES – GO TO STEP 2.

   NO – Intermittent failure

2. **Headlight Dimmer/Passing Light Control Switch Line Open Circuit Inspection**

   Disconnect the BCU 39P (Black) connector (page 21-23).

   Disconnect the left handlebar switch 8P (Black) connector (page 21-17).

   Check for continuity between the BCU 39P (Black) connector and left handlebar switch 8P (Black) connector.

   CONNECTION: White – White
   Green/blue – Green/blue

   Is there continuity?

   YES – • Faulty left handlebar switch (headlight dimmer/passing light control switch)
   • Faulty BCU

   NO – Open circuit in the White or Green/blue wire

DTC B12 TURN SIGNAL SWITCH FAILURE

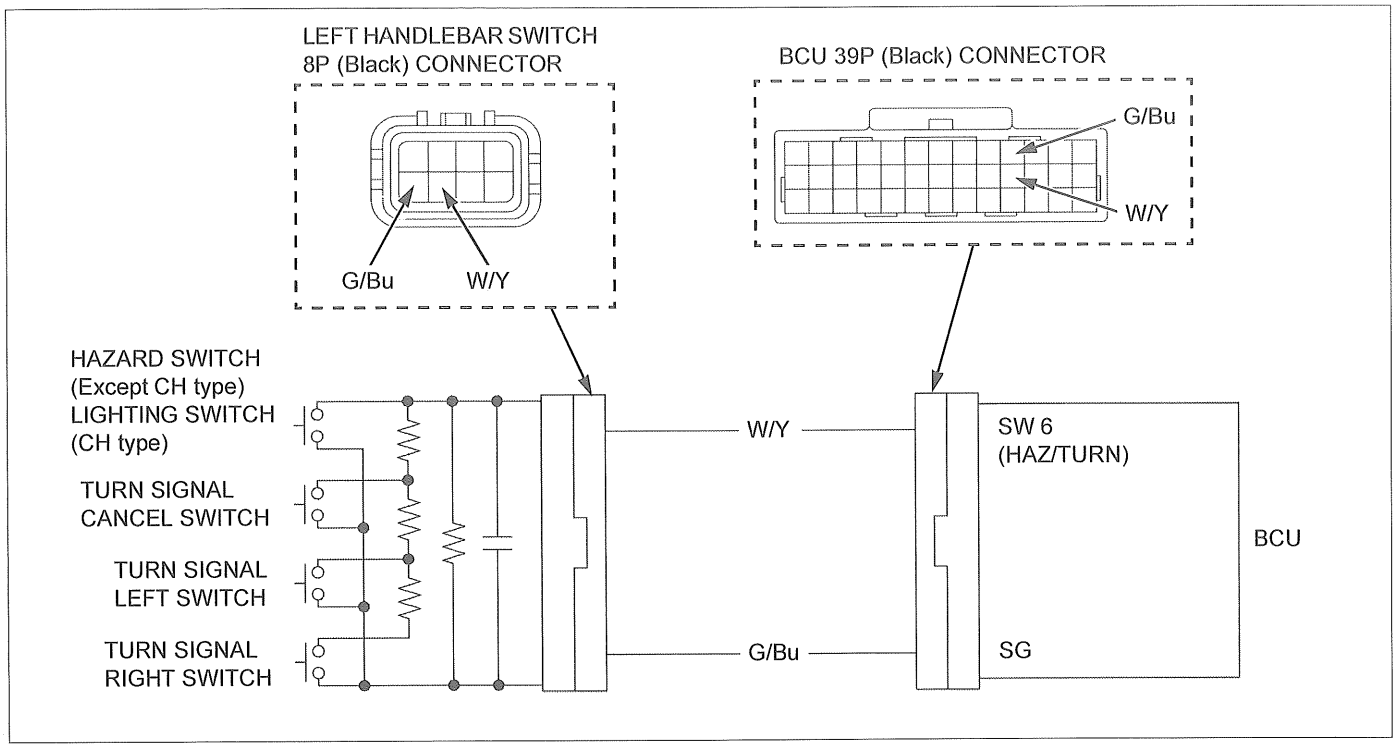

DTC B12 (12-1)
TURN SIGNAL SWITCH FAILURE (LOW VOLTAGE)

Probable cause:

- Short circuit in the related wire
- Faulty switch
- Faulty BCU

Symptom/Fail-safe function:

- Turn signal light works normally

1. **Recheck DTC**

   Read the DTC.

   Is the DTC B12 (12-1) indicated?

   YES – GO TO STEP 2.

   NO – Intermittent failure

2. **Turn Signal Switch Line Short Circuit Inspection**

   Disconnect the BCU 39P (Black) connector (page 21-23).

   Check for continuity between the BCU 39P (Black) connector and ground.

   CONNECTION: White/yellow – Ground

   Is there continuity?

   YES – Short circuit in the White/yellow wire

   NO –
   - Faulty left handlebar switch (turn signal left/right switch, turn signal cancel switch, or hazard switch/lighting switch)
   - Faulty BCU

DTC B12 (12-2)
TURN SIGNAL SWITCH FAILURE (HIGH VOLTAGE)

Probable cause:

- Open circuit in the related wire
- Faulty switch
- Faulty BCU

Symptom/Fail-safe function:

- Turn signal light works normally

1. **Recheck DTC**

   Read the DTC.

   Is the DTC B12 (12-2) indicated?

   YES – GO TO STEP 2.

   NO – Intermittent failure

2. **Turn Signal Switch Line Open Circuit Inspection**

   Disconnect the BCU 39P (Black) connector (page 21-23).

   Disconnect the left handlebar switch 8P (Black) connector (page 21-17).

   Check for continuity between the BCU 39P (Black) connector and left handlebar switch 8P (Black) connector.

   CONNECTION: White/yellow – White/yellow
   Green/blue – Green/blue

   Is there continuity?

   YES – • Faulty left handlebar switch (turn signal left/right switch, turn signal cancel switch, or hazard switch/lighting switch)
   • Faulty BCU

   NO – Open circuit in the White/yellow or Green/blue wire

DTC B21/B22/B23/B24
TURN SIGNAL LIGHT FAILURE

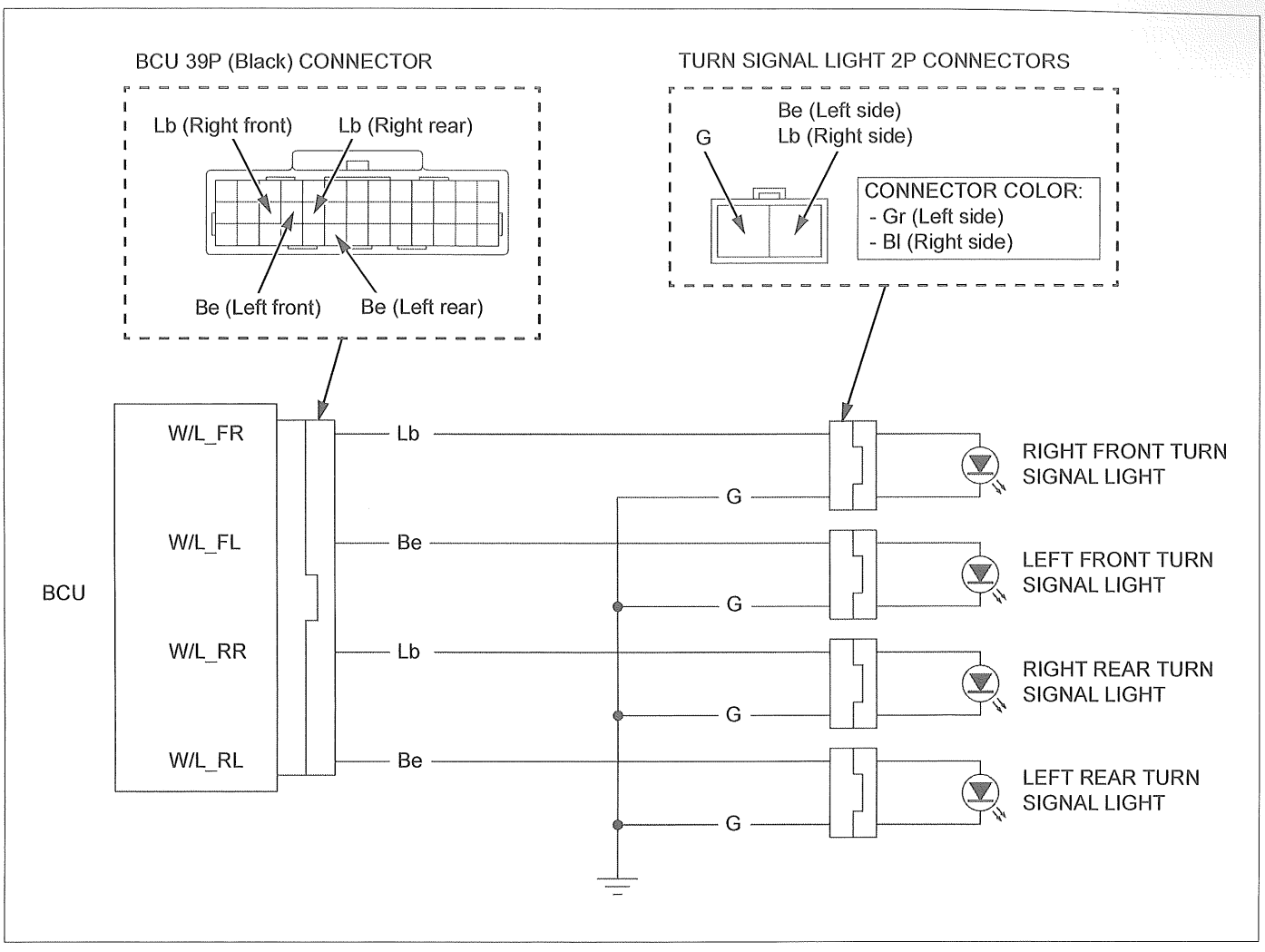

DTC B21 (21-1)/B22 (22-1)/B23 (23-1)/B24 (24-1)
TURN SIGNAL LIGHT FAILURE (SHORT CIRCUIT)

Probable cause:

- Short circuit in the related wire
- Faulty turn signal light
- Faulty BCU

Symptom/Fail-safe function:

- Turn signal light does not work
- Normal units blink two times faster than usual

1. **Recheck DTC**

   Read the DTC.

   Is the DTC B21 (21-1)/B22 (22-1)/B23 (23-1)/B24 (24-1) indicated?

   YES – GO TO STEP 2.

   NO – Intermittent failure

2. **Turn Signal Light Line Short Circuit Inspection**

Disconnect the BCU 39P (Black) connector (page 21-23).

Check for continuity between the BCU 39P (Black) connector and ground.

CONNECTION:
Left side: Beige – Ground
Right side: Light blue – Ground

Is there continuity?

YES – Short circuit in the Beige or Light blue wire

NO – • Faulty turn signal light
• Faulty BCU

DTC B21 (21-2)/B22 (22-2)/B23 (23-2)/B24 (24-2)
TURN SIGNAL LIGHT FAILURE (OPEN CIRCUIT)

Probable cause:

- Open circuit in the related wire
- Faulty turn signal light
- Faulty BCU

Symptom/Fail-safe function:

- Normal units blink two times faster than usual

1. **Recheck DTC**

Read the DTC.

Is the DTC B21 (21-2)/B22 (22-2)/B23 (23-2)/B24 (24-2) indicated?

YES – GO TO STEP 2.

NO – Intermittent failure

2. **Turn Signal Light Line Open Circuit Inspection**

Disconnect the BCU 39P (Black) connector [1] (page 21-23).

Disconnect the turn signal light 2P connectors

– Front: Remove the front side cowl (page 2-15).
– Rear: Remove the license light bracket (page 2-28)

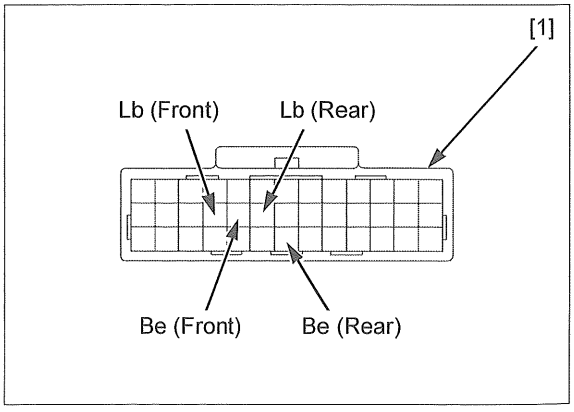

Check for continuity in the following wire:

– Beige or Light blue between the BCU 39P (Black) connector and each turn signal light 2P connector
– Green between each turn signal light 2P connector and ground

CONNECTION:
Left side: Beige – Beige
Green – Ground
Right side: Light blue – Light blue
Green – Ground

Is there continuity?

YES – • Faulty turn signal light
• Faulty BCU

NO – Open circuit in the Beige, Light blue or Green wires

DTC B35 HORN RELAY FAILURE

DTC B35 (35-1) HORN RELAY FAILURE (SHORT CIRCUIT)

Probable cause:

- Faulty horn
- Faulty BCU

Symptom/Fail-safe function:

- Horn does not turn OFF

1. **Horn Inspection**

   Replace the horn with a known good one and recheck.

   Is the DTC B35 (35-1) indicated?

   YES – Faulty BCU

   NO – Faulty original horn

DTC B35 (35-2) HORN RELAY FAILURE (OPEN CIRCUIT)

Probable cause:

- Faulty BCU

Symptom/Fail-safe function:

- Horn does not work

1. **Recheck DTC**

   Read the DTC.

   Is the DTC B35 (35-2) indicated?

   YES – Faulty BCU

   NO – Intermittent failure

DTC B81 HORN/Fn/SEL LEFT/SEL RIGHT SWITCH FAILURE

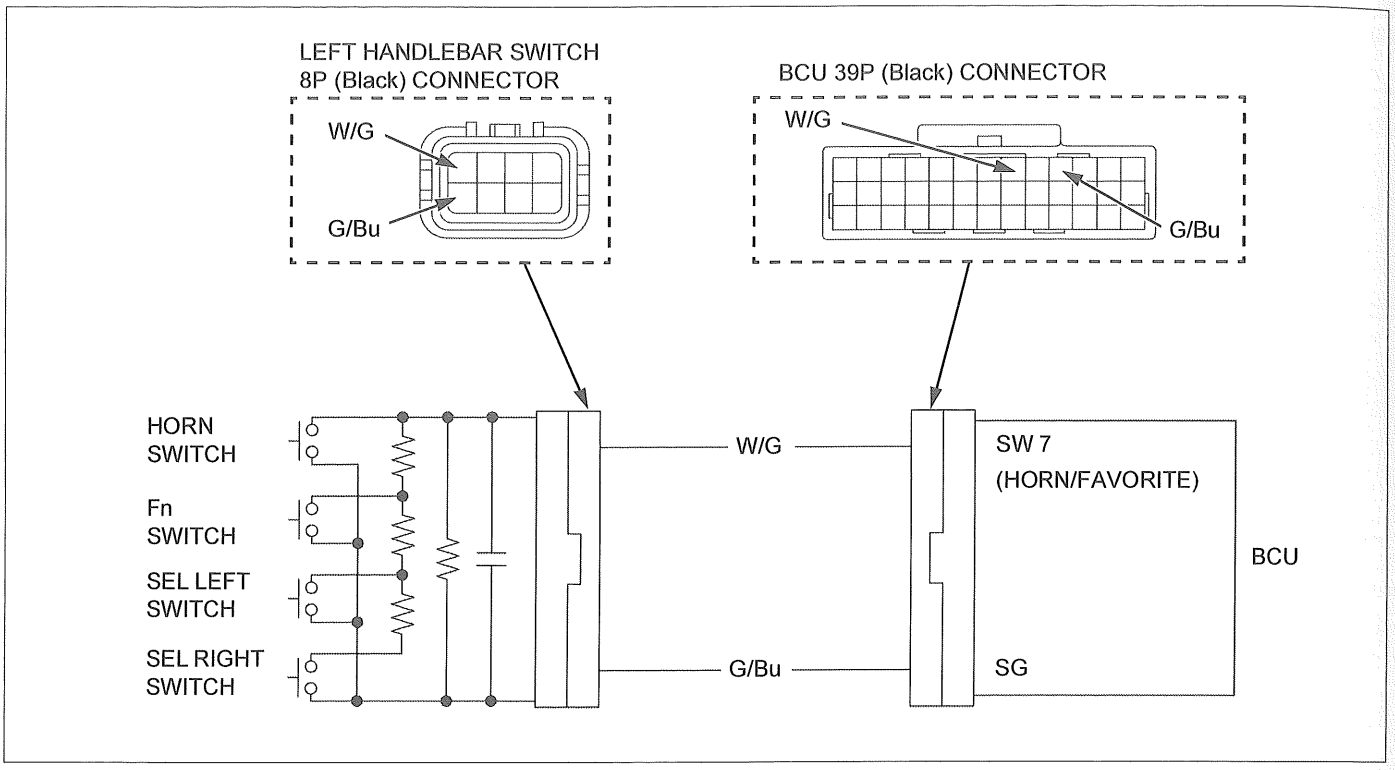

DTC B81 (81-1) HORN/Fn/SEL LEFT/SEL RIGHT SWITCH FAILURE (SHORT CIRCUIT)

Probable cause:

- Short circuit in the related wire
- Faulty switch
- Faulty BCU

1. **Recheck DTC**

   Read the DTC.

   Is the DTC B81 (81-1) indicated?

   YES – GO TO STEP 2.

   NO – Intermittent failure

2. **Horn/Fn/Sel left/Sel right Switch Line Short Circuit Inspection**

   Disconnect the BCU 39P (Black) connector (page 21-23).

   Check for continuity between the BCU 39P (Black) connector and ground.

   CONNECTION: White/green – Ground

   Is there continuity?

   YES – Short circuit in the White/green wire

   NO – • Faulty left handlebar switch
   • Faulty BCU

DTC B81 (81-2) HORN/Fn/SEL LEFT/SEL RIGHT SWITCH FAILURE (OPEN CIRCUIT)

Probable cause:

- Open circuit in the related wire
- Faulty switch
- Faulty BCU

1. **Recheck DTC**

   Read the DTC.

   Is the DTC B81 (81-2) indicated?

   YES – GO TO STEP 2.

   NO – Intermittent failure

2. **Horn/Fn/Sel left/Sel right Switch Line Open Circuit inspection**

   Disconnect the BCU 39P (Black) connector (page 21-23).

   Disconnect the left handlebar switch 8P (Black) connector (page 21-17).

   Check for continuity between the BCU 39P (Black) connector and left handlebar switch 8P (Black) connector.

   CONNECTION:
   Signal line: White/green – White/green
   Ground line: Green/blue – Green/blue

   Is there continuity?

   YES – • Faulty left handlebar switch
   • Faulty BCU

   NO – Open circuit in the White/green or Green/blue wire

DTC B82 MODE/SEL UP/SEL DOWN SWITCH FAILURE

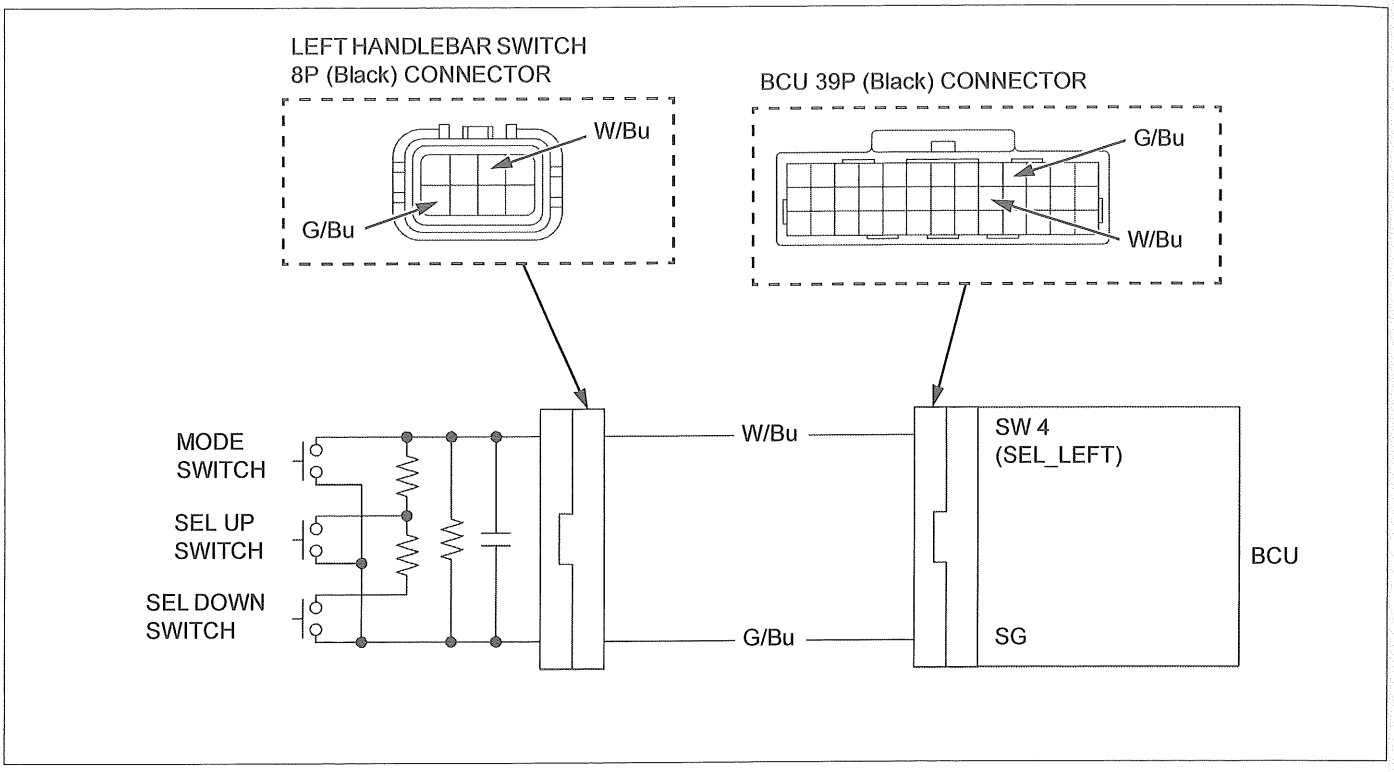

DTC B82 (82-1) MODE/SEL UP/SEL DOWN SWITCH FAILURE

Probable cause:

- Short circuit in the related wire
- Faulty switch
- Faulty BCU

1. **Recheck DTC**

   Read the DTC.

   Is the DTC B82 (82-1) indicated?

   YES – GO TO STEP 2.

   NO – Intermittent failure

2. **MODE/Sel Up/Sel Down Switch Line Short Circuit Inspection**

   Disconnect the BCU 39P (Black) connector (page 21-23).

   Check for continuity between the BCU 39P (Black) connector and ground.

   CONNECTION: White/blue – Ground

   Is there continuity?

   YES – Short circuit in the White/blue wire

   NO – • Faulty left handlebar switch
   • Faulty BCU

DTC B82 (82-2) MODE/SEL UP/SEL DOWN SWITCH FAILURE (OPEN CIRCUIT)

Probable cause:

- Open circuit in the related wire
- Faulty switch
- Faulty BCU

1. **Recheck DTC**

   Read the DTC.

   Is the DTC B82 (82-2) indicated?

   YES – GO TO STEP 2.

   NO – Intermittent failure

2. **MODE/SEL UP/SEL DOWN Switch Line Open Circuit Inspection**

   Disconnect the BCU 39P (Black) connector (page 21-23).

   Disconnect the left handlebar switch 8P (Black) connector (page 21-17).

   Check for continuity between the BCU 39P (Black) connector and left handlebar switch 8P (Black) connector.

   CONNECTION: White/blue – White/blue
   Green/blue – Green/blue

   Is there continuity?

   YES – • Faulty left handlebar switch
   • Faulty BCU

   NO – Open circuit in the White/blue or Green/blue wire

DTC B91 (101-2) BCU EEPROM MALFUNCTION

Probable cause:

- Faulty BCU

Symptom/Fail-safe function:

- Body control system works normally

1. **Recheck DTC**

   Read the DTC.

   Is the DTC B91 (101-2) indicated?

   YES – Faulty BCU

   NO – Intermittent failure

22. Honda SMART Key SYSTEM

SERVICE INFORMATION 22-2

SYSTEM LOCATION 22-2

SYSTEM DIAGRAM 22-3

Honda SMART Key SYSTEM TROUBLESHOOTING INFORMATION 22-4

Honda SMART Key SYSTEM DTC INDEX 22-6

Honda SMART Key SYSTEM DTC TROUBLESHOOTING 22-7

EMERGENCY MODE 22-11

AUTHENTICATION ID REGISTRATION PROCEDURE 22-13

REQUIRED PARTS FOR Honda SMART Key SYSTEM PROBLEM 22-19

SMART CONTROL UNIT 22-20

ESL UNIT 22-20

SEAT/FUEL LID OPEN ACTUATOR 22-21

IGNITION SWITCH 22-22

BUZZER 22-23

SERVICE INFORMATION

GENERAL

- When checking the Honda SMART Key system, follow the steps in the troubleshooting flow chart (page 22-7).
- Keep the Honda SMART Key away from the other Honda SMART Key when using it. The jamming of the key code signal may occur and the proper operation of the system will be obstructed.
- The Honda SMART Key has built-in electronic part. Do not drop or strike the Honda SMART Key against a hard object, and do not leave the Honda SMART Key in the motorcycle where the temperature will rise. Do not leave the Honda SMART Key in the water for a prolonged time such as by washing the clothes.
- Once the new Honda SMART Key is registered, it is not usable for other motorcycle.
- To replace the smart control unit, replace the smart control unit and the Honda SMART Key as a set.
- The smart control unit can store up to four Honda SMART Key codes. (The four Honda SMART Keys can be registered.)
- Do not modify the Honda SMART Key system as it can cause the system failure. (The engine cannot be started.)
- Refer to FRAME/BODY PANELS/EXHAUST SYSTEM section for the following:
  - Seat and fuel lid open switch removal/installation (page 2-9)
  - Emergency key cylinder removal/installation (page 2-29)
- The following color codes are used throughout this section.

Be = Beige	Bl = Black	Br = Brown	Bu = Blue	G = Green	Gr = Gray	Lb = Light blue
Lg = Light green	O = Orange	P = Pink	R = Red	V = Violet	W = White	Y = Yellow

SYSTEM LOCATION

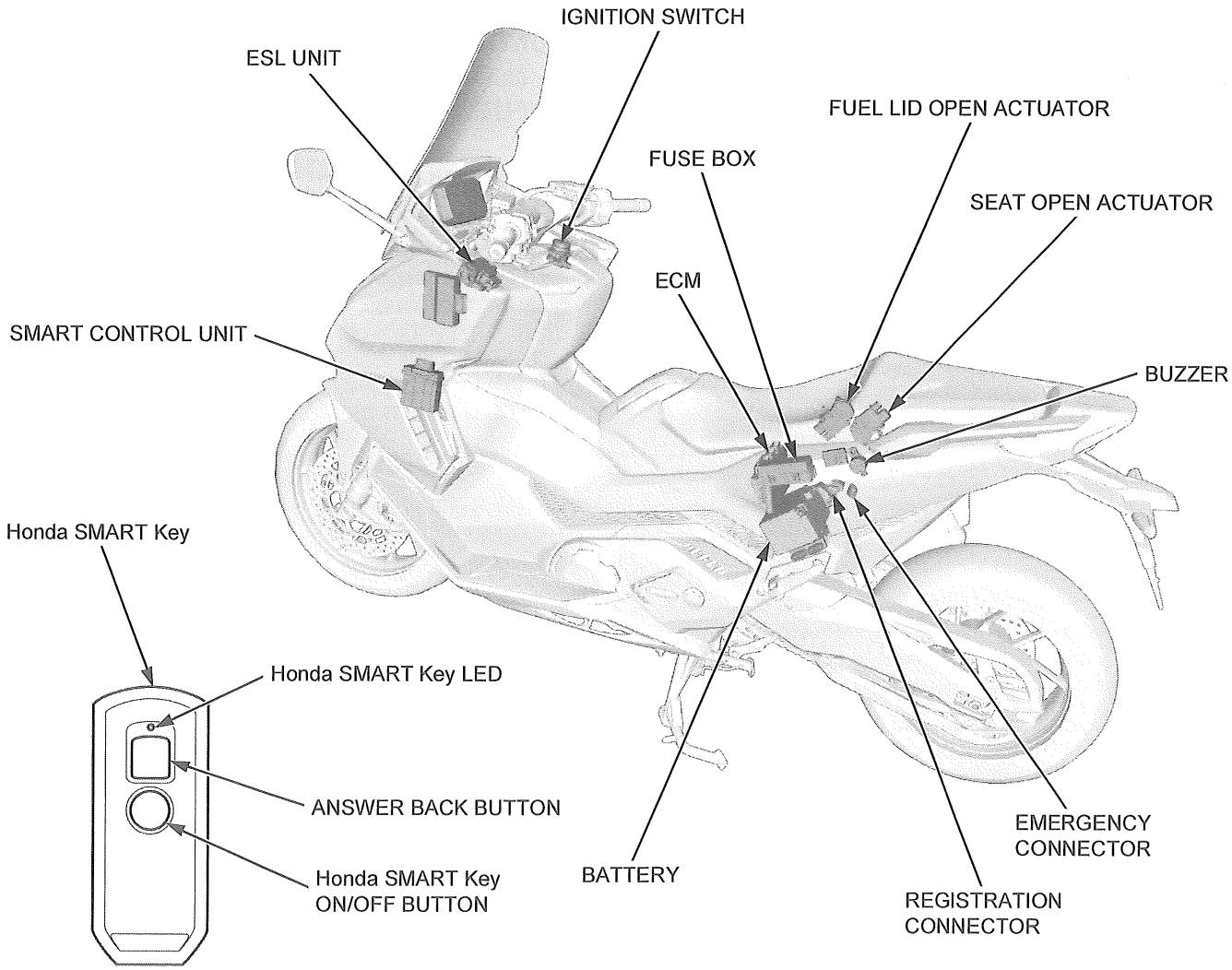

SYSTEM DIAGRAM

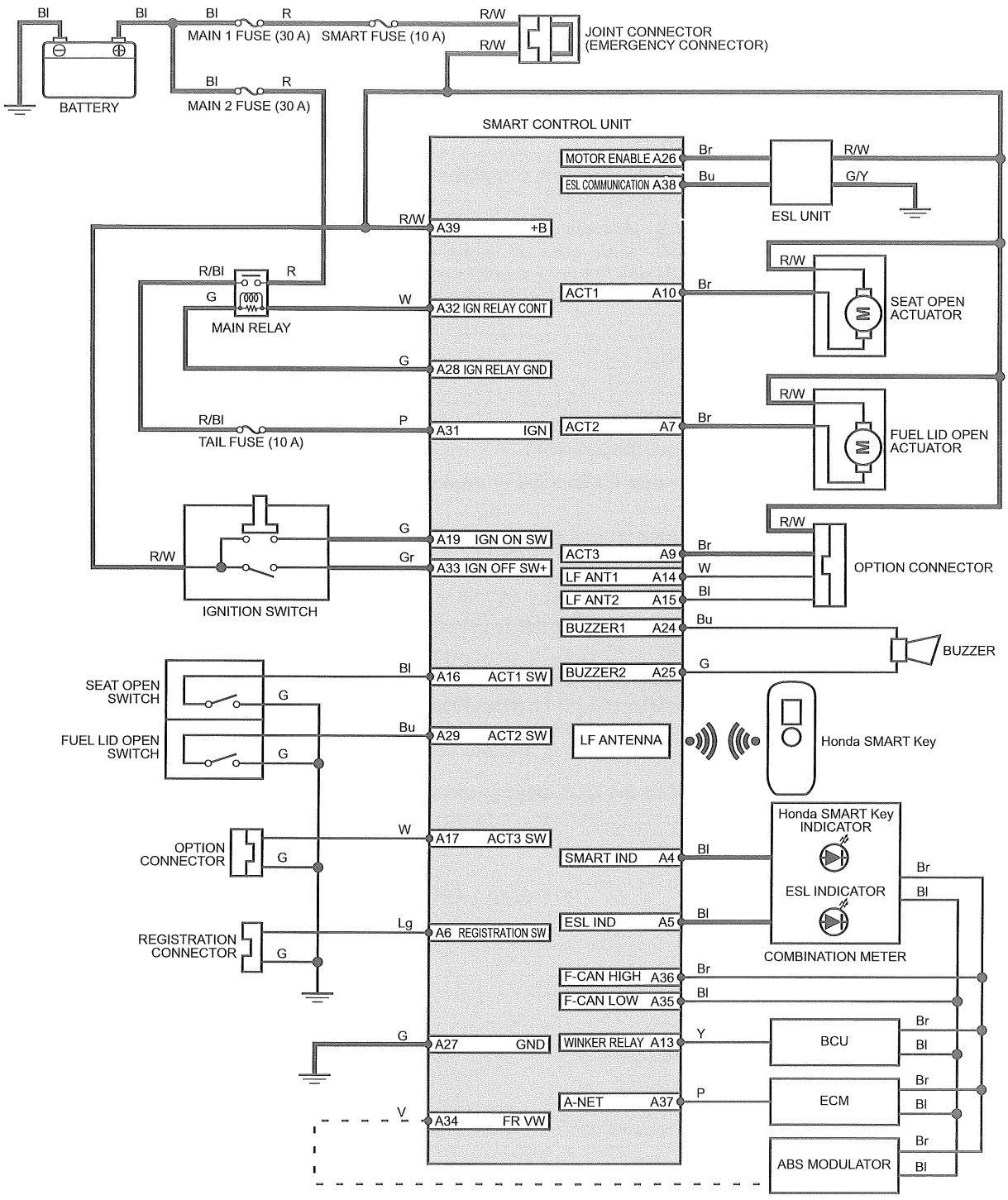

Honda SMART Key SYSTEM TROUBLESHOOTING INFORMATION

NOTE:

- Before starting the troubleshooting, check the following:
  - DTC (PGM-FI system) (page 4-6)
  - DTC (ABS) (page 19-6)
  - Battery voltage (page 20-5)
  - Honda SMART Key battery
  - Each fuse condition
  - Loose or poor contact of the relation connectors
  - Communication errors (page 22-13)

The Honda SMART Key indicator comes on for approximately two seconds then it goes off, when the ignition switch is turned ON with the properly registered Honda SMART Key and the Honda SMART Key system functions normally.

DTC READOUT

1. Turn the ignition switch OFF.
2. Remove the left rear cowl (page 2-25).
3. Remove the joint connector [1] from the emergency connector.
4. Push the seat open switch [2] or fuel lid open switch [3].
5. Install the joint connector.
6. Within 1 minute from step 5, short the registration connector (page 22-13).
7. Within 1 minute from step 6, turn the ignition OFF switch [4] counterclockwise and hold it more than 4 seconds until the ESL indicator blinks.

   The ESL indicator blinks to indicate the DTC.

   Read the DTC and follow the DTC index (page 22-6).

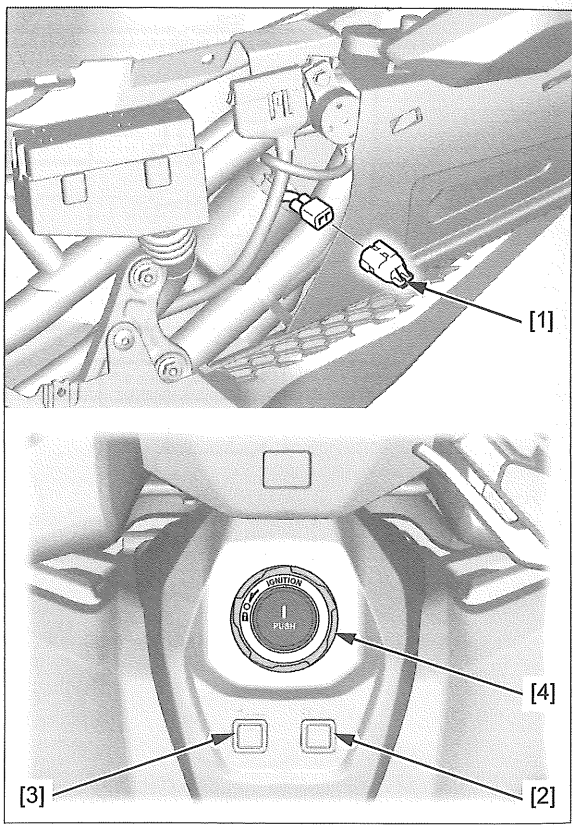

DTC INDICATION PATTERN

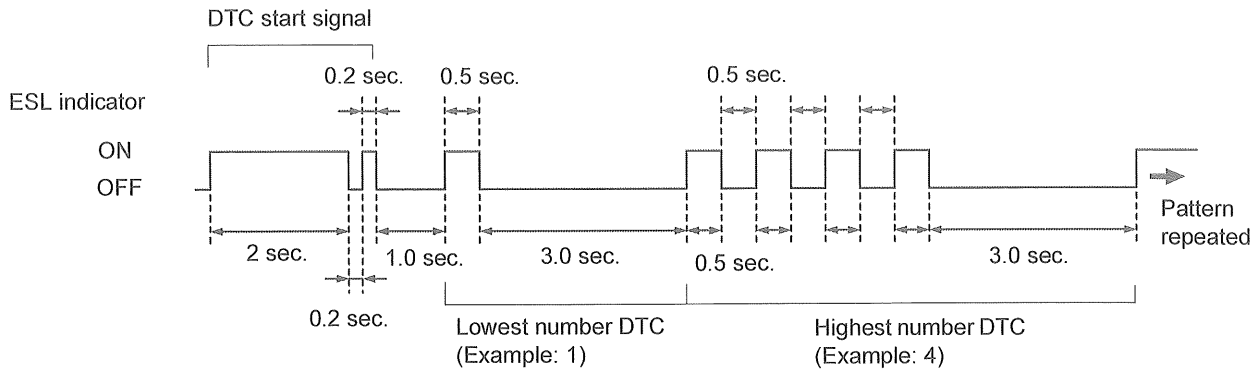

ERASING DTC

Check the DTC (page 22-4).

While the SCS short connector is connected, the DTC can be erased by removing the SCS short connector while holding the ignition OFF switch counterclockwise.

CIRCUIT INSPECTION

INSPECTION AT ECM AND SMART CONTROL UNIT CONNECTOR

- Always clean around and keep any foreign material away from the smart control unit 39P connector before disconnecting it.
- A system problem is often related to poorly connected or corroded terminals.
  Check those connections before proceeding.
- In testing at smart control unit 39P connector (wire harness side) terminal, always use the test probe [1].
  Insert the test probe into the connector terminal, then attach the digital multimeter probe to the test probe.

TOOL:

Test probe	**07ZAJ-RDJA110**

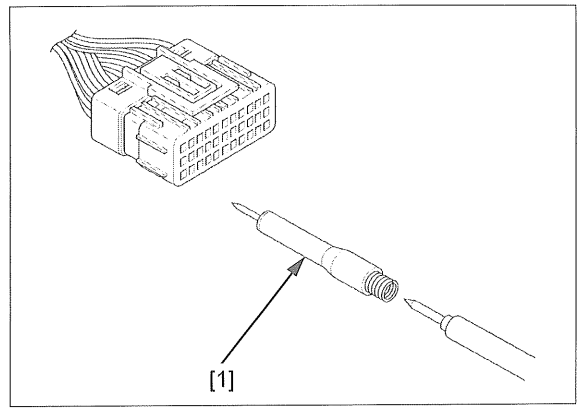

Honda SMART Key SYSTEM DTC INDEX

- The ESL indicator blinks when reading the DTC.

DTC	System Failure	Symptom	Refer to
1	Smart control unit EEPROM or CPU error	• Ignition switch cannot be operated	22-7
3	Smart control unit output error	• Ignition switch cannot be operated • ESL cannot be locked	22-7
4	LF antenna (smart control unit) malfunction	• Ignition switch cannot be operated • ESL cannot be locked	22-7
5	Optional LF antenna malfunction	• Ignition switch cannot be operated • ESL cannot be locked	–
6	CAN communication error (ECM)	• Ignition switch cannot be turned OFF • ESL cannot be locked	4-52
7	A-NET communication error	• Engine cannot be started	22-7
8	ESL unit circuit malfunction	• ESL cannot be locked • ESL cannot be unlocked	22-8
9	CAN communication error (ABS)	• Ignition switch cannot be turned OFF • ESL cannot be locked	22-10
10	CAN communication error (BUS)	• Engine cannot be started • Engine cannot be stopped • Ignition switch cannot be operated	4-50

Honda SMART Key SYSTEM DTC TROUBLESHOOTING

DTC 1 or 3: SMART CONTROL UNIT MALFUNCTION

1. **Recheck DTC**

   Erase the DTC (page 22-5).
   Recheck the DTC.

   Is DTC 1 or 3 indicated?

   YES – Replace the smart control unit with a new one (page 22-20), and recheck.

   NO – Intermittent failure

DTC 4: LF ANTENNA (Smart control unit) MALFUNCTION

1. **Recheck DTC**

   Erase the DTC (page 22-5).
   Recheck the DTC.

   Is DTC 4 indicated?

   YES – Replace the smart control unit with a new one (page 22-20), and recheck.

   NO – Intermittent failure

DTC 7: A-NET COMMUNICATION ERROR

1. **A-NET Line Open Circuit Inspection**

   Turn the ignition switch OFF.
   Disconnect the following:

   - Smart control unit 39P (Black) connector (page 22-20)
   - ECM 33P (Gray) connector (page 4-55)

   Check the continuity between the wire harness side smart control unit 39P (Black) [1] and ECM 33P (Gray) [2] connectors.

   TOOL:
   Test probe **07ZAJ-RDJA110**

   Connection:
   A37 – Pink (C15)

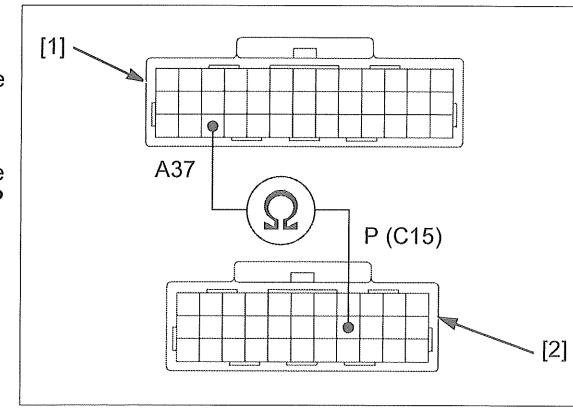

   Is there continuity?

   YES – GO TO STEP 2.

   NO – Open circuit in the Pink wire

2. **A-NET Line Short Circuit Inspection**

Check for continuity between the wire harness side 39P (Black) connector [1] and ground.

TOOL:
Test probe **07ZAJ-RDJA110**

Connection:
37 – Ground

Is there continuity?

YES – Short circuit in the Pink wire

NO – GO TO STEP 3.

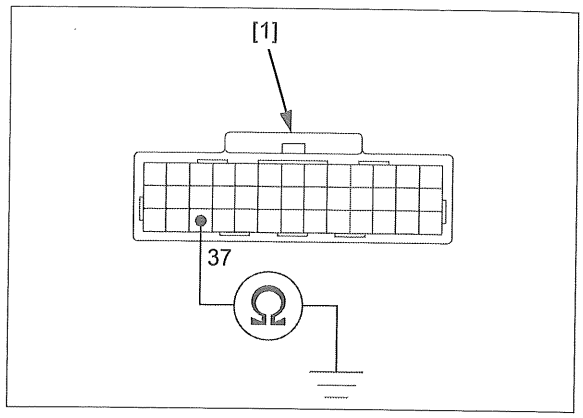

3. **ECM Inspection**

Replace the ECM with a new one (page 4-55).

Erase the DTC (page 22-5).
Check the DTC.

Is DTC 7 indicated?

YES – • Register the smart control unit again (page 22-17).
• If the DTC 7 appears again, replace the smart control unit with a new one (page 22-20), and recheck.

NO – Faulty original ECM

DTC 8: ESL UNIT

1. **ESL Unit Power/ground Line Open Circuit Inspection**

Turn the ignition switch OFF.
Disconnect the ESL unit 6P connector [1].

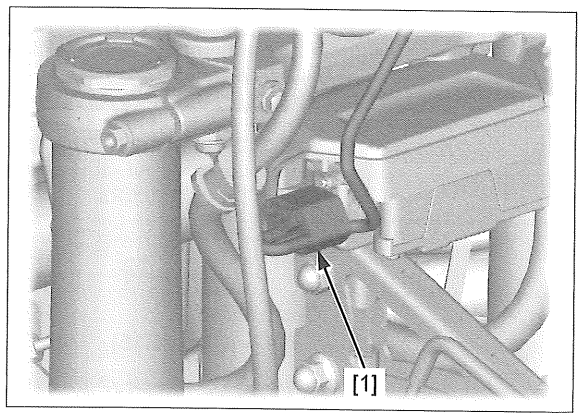

Measure the voltage at the wire harness side 6P connector [1].

Connection: Red/white (+) – Green/yellow (–)

Is there battery voltage?

YES – GO TO STEP 2.

NO – • Open circuit in the Red/white wire
• Open circuit in the Green/yellow wire

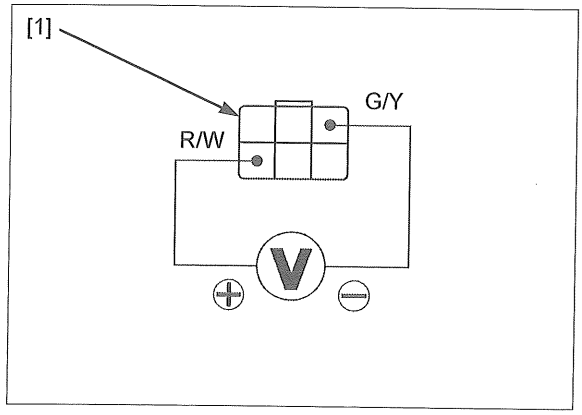

2. **ESL Unit Signal Line Open Circuit Inspection**

Disconnect the smart control unit 39P (Black) connector (page 22-20).

Check the continuity between the wire harness side 39P (Black) [1] and 6P [2] connectors.

TOOL:
Test probe **07ZAJ-RDJA110**

Connection: A26 – Brown
A38 – Blue

Is there continuity?

YES – GO TO STEP 3.

NO – • Open circuit in the Brown wire
• Open circuit in the Blue wire

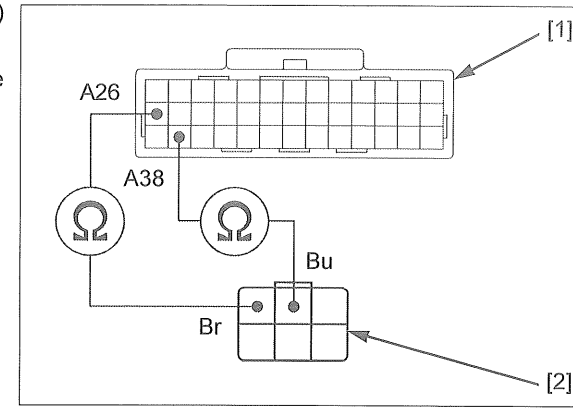

3. **ESL Unit Signal Line Short Circuit Inspection**

Check for continuity between the wire harness side 39P (Black) connector [1] and ground

TOOL:
Test probe **07ZAJ-RDJA110**

Connection: 26 – Ground
38 – Ground

Is there continuity?

YES – • Short circuit in the Brown wire
• Short circuit in the Blue wire

NO – GO TO STEP 4.

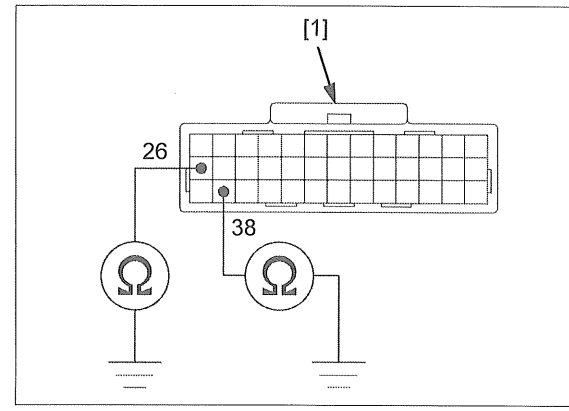

4. **ESL Unit Inspection**

Replace the ESL unit with a new one (page 22-20).
Erase the DTC (page 22-5).
Check the DTC (page 22-4).

Is DTC 8 indicated?

YES – Replace the smart control unit with a new one (page 22-20), and recheck.

NO – Faulty original ESL unit

DTC 9: CAN COMMUNICATION ERROR (ABS)

1. CAN Line Open Circuit Inspection

Disconnect the following:

- Smart control unit 39P (Black) connector (page 22-20)
- ABS modulator 18P (Black) connector (page 19-25)

Check for continuity between the wire harness side 39P (Black) [1] and 18P (Black) [2] connectors.

TOOL:
Test probe **07ZAJ-RDJA110**

Connection:
A35 – Black (11)
A36 – Brown (2)

Is there continuity?

YES – GO TO STEP 2.

NO – • Open circuit in the Black wire
• Open circuit in the Brown wire

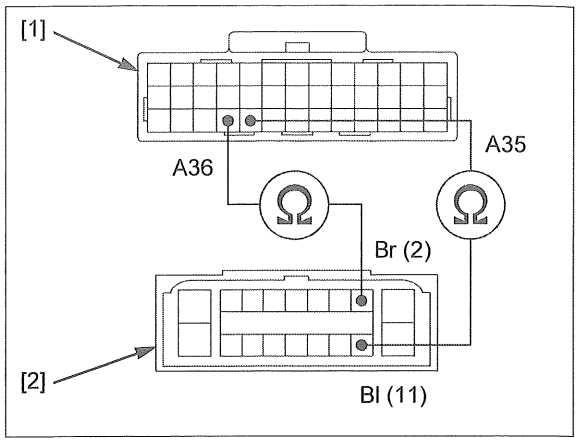

2. CAN Line Short Circuit Inspection

Check for continuity between the wire harness side 39P (Black) connector [1] and ground.

TOOL:
Test probe **07ZAJ-RDJA110**

Connection:
A35 (Smart control unit) – Ground
A36 (Smart control unit) – Ground

Is there continuity?

YES – • Short circuit in the Black wire
• Short circuit in the Brown wire

NO – GO TO STEP 3.

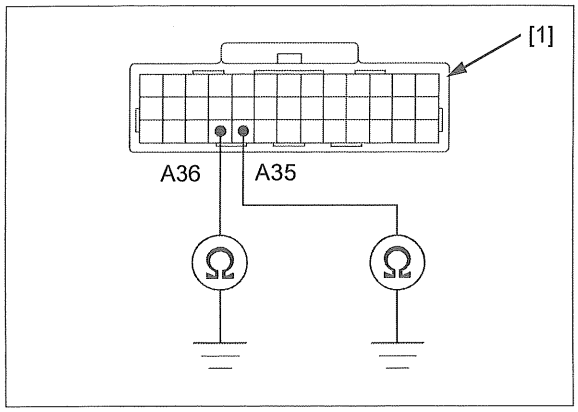

3. ABS DTC Check

Connect the all disconnected connectors.
Check if any ABS DTC is displayed on the combination meter (page 4-7).

Is ABS DTC indicated?

YES – Refer to ABS DTC Index (page 19-9).

NO – GO TO STEP 4.

4. ABS modulator inspection

Replace the ABS modulator with a new one (page 19-25).
Erase the DTC (page 22-5).
Check the DTC (page 22-4).

Is DTC 9 indicated?

YES – Replace the smart control unit with a new one (page 22-20), and recheck.

NO – Faulty original ABS modulator

EMERGENCY MODE

HOW TO UNLOCK THE SEAT USING THE EMERGENCY KEY

NOTE:

- The seat can be unlocked using the emergency key in an emergency such as when the motorcycle's battery runs out or the Honda SMART Key is lost or battery runs out.

Remove the emergency key cylinder cap [1].

Turn the emergency cylinder using the emergency key [2] to unlock the seat.

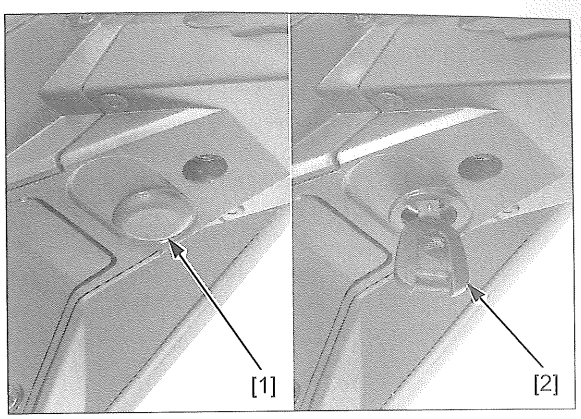

HOW TO TURN ON THE IGNITION SWITCH IN EMERGENCY MODE

NOTE:

- The smart control unit provides an emergency mode to unlock the ESL and start the engine in an emergency, such as when the Honda SMART Key is lost or its battery runs out.

Remove the left rear cowl (page 2-25).

1. Remove the joint connector [1] from the emergency connector.
2. Push the seat open switch [2] or fuel lid open switch [3].
3. Install the joint connector.

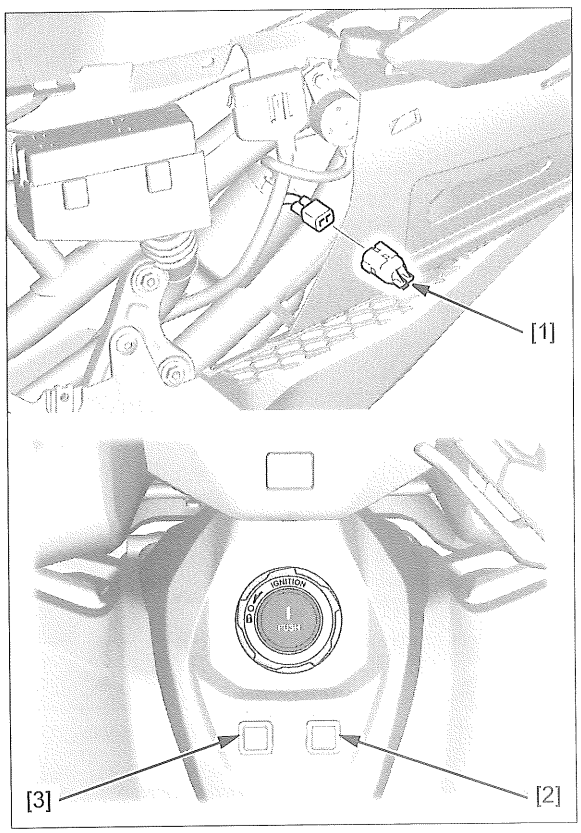

4. Within 1 minute from step 3, press the ignition ON switch [1] for more than 4 seconds.

   The buzzer sounds for 2 seconds and the ESL indicator turns on. The smart control unit enters the ID tag number input mode.

5. Confirm the nine digits on the ID tag.

   Press the ignition ON switch the same number of times as the first digit from left of ID number then rotate the ignition OFF switch [2] counterclockwise.

   The buzzer sounds for 1 second and the ESL indicator turns off for 1 second then it turns on.

NOTE:

- To input 0 of digit, rotate the ignition OFF switch counterclockwise without pressing the ignition ON switch.
- If the ID number is not input within 1 minute, the input mode is time out. Try again from step 1.

6. Input the 2nd through 9th ID digits in the same procedure as step 5.

   The ESL indicator blinks at the interval of 2 seconds.

NOTE:

- If the ID input is unsuccessful, the ESL indicator turns off and the buzzer sounds 6 times. Try again from step 1.

7. Press the ignition ON switch to unlock the ESL and press it again to turn the ignition switch ON.

NOTE:

- Rotate the ignition OFF switch counterclockwise to turn the ignition switch OFF.
  Repeat steps 1 through 6 to turn the ignition switch ON when it is turned off.

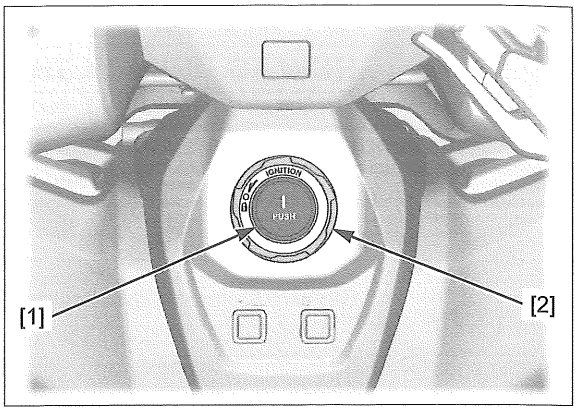

AUTHENTICATION ID REGISTRATION PROCEDURE

NOTE:

- Each Honda SMART Key has its particular ID number that cannot be changed or deleted.
- Once a Honda SMART Key has been registered to a smart control unit (vehicle), it cannot be registered to another smart control unit.

POTENTIAL COMMUNICATION ERRORS

Radio-wave communication will be used when registering the smart authentication ID.
If there is any problem in the registration of a Honda SMART Key, the following may cause a communication error.

- A TV tower, power generation plant, broadcast station, airport or other facility that generates strong radio wave or noise is situated nearby.
- The Honda SMART Key is nearby a wireless communications device such as wireless applications, a mobile phone, or laptop computer.
- The Honda SMART Key is making contact with or is covered by a metallic object.
- The motorcycle battery voltage is low
- The Honda SMART Key battery power is low
- The Honda SMART Key has trouble
- The smart control unit has trouble
- The associated circuits of the smart control unit have trouble

HOW TO SHORT THE REGISTRATION CONNECTOR

Remove the maintenance lid (page 20-5).

Remove the dummy connector [1] from the registration connector [2].

Short the registration connector using the short connector included in the tool bag.

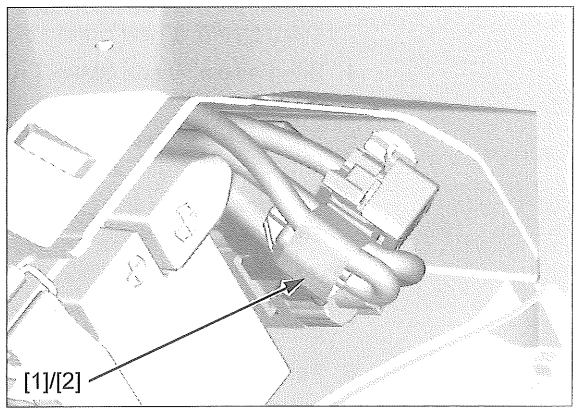

Honda SMART Key REGISTRATION PROCEDURE

WHEN THE ADDITIONAL SPARE Honda SMART Key IS REQUIRED:

NOTE:

- All existing spare Honda SMART Keys must be registered again.
- Never lose the ID tag of the Honda SMART Key because it is necessary in emergency.
- Four Honda SMART Key ID codes can be registered into one smart control unit. (It is possible to register up to four Honda SMART Keys.)
- Do not turn ON more than two Honda SMART Keys at the same time as it will cause registration failure.

Prepare a new Honda SMART Key.

Confirm that all Honda SMART Keys are turned OFF by pushing the ON/OFF button. (The red LED blinks five times.)

1. Turn the registered Honda SMART Key ON by pushing the ON/OFF button for 1 second. (The green LED blinks five times.)
2. Press the ignition ON switch [1].

   Short the registration connector within 15 seconds (page 22-13).

   The smart control unit enters the spare key registration mode.

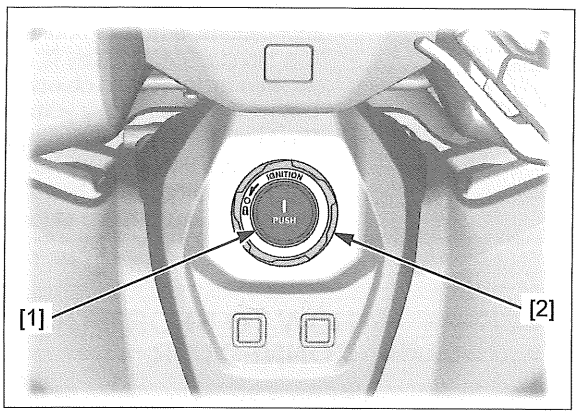

NOTE:

- The registrations of all Honda SMART Keys except the Honda SMART Key used now are deleted.

3. Turn the currently used Honda SMART Key OFF.

NOTE:

- If there is a spare Honda SMART Key whose registration has been deleted, register them first and then register a new Honda SMART Key.

4. Bring a new Honda SMART Key near the motorcycle and turn it ON.
5. Press the ignition ON switch within 2 minutes after shorting the registration connector.

   The new Honda SMART Key is registered into the smart control unit.

NOTE:

- If there is any problem in the registration, the ESL indicator will indicate the failure code (page 22-19).

6. Turn the registered Honda SMART Key OFF.

   Repeat the steps 4 and 5 within 2 minutes after registering the previous Honda SMART Key when you continuously register the other Honda SMART Key.

NOTE:

- The smart control unit can store up to four Honda SMART Keys. (If you try to register fifth new Honda SMART Key, the ESL indicator blinks.)

7. Disconnect the short connector from the registration connector.
8. Rotate the ignition OFF switch [3] counterclockwise to turn the ignition switch OFF.

WHEN ALL Honda SMART Keys WERE LOST:

NOTE:

- Never lose the ID tag of the key because it is necessary in emergency.
- Do not turn ON more than two Honda SMART Keys at the same time as it will cause registration failure.

Prepare new Honda SMART Keys and the ID tag of the lost Honda SMART Key.

Confirm that all Honda SMART Keys are turned OFF by pushing the ON/OFF button. (The red LED blinks five times.)

1. Bring a new Honda SMART Key near the motorcycle and turn it ON by pushing the ON/OFF button for 1 second. (The green LED blinks five times.)
2. Turn the ignition switch ON using the emergency mode (page 22-11).

   Short the registration connector within 15 seconds (page 22-13).
3. Press the ignition ON switch [1] within 2 minutes after shorting the registration connector.

   Rotate the ignition OFF switch [2] counterclockwise.

   Disconnect the short connector from the registration connector.
4. Turn the ignition switch ON with the Honda SMART Key used in step 1.

   Short the registration connector within 15 seconds.

   Turn the Honda SMART Key OFF.
5. If you have another new Honda SMART Key, turn a new Honda SMART Key ON.

   Press the ignition ON switch within 2 minutes after registering the previous Honda SMART Key.

   Turn the new Honda SMART Key OFF.
6. Disconnect the short connector from the registration connector.
7. Rotate the ignition OFF switch counterclockwise to turn the ignition switch OFF.

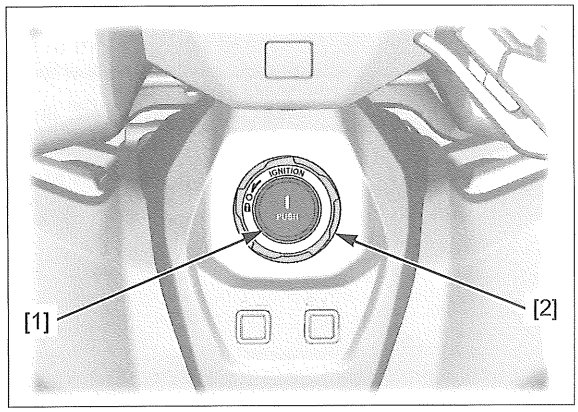

REGISTRATION PROCEDURE WHEN REPLACING THE Honda SMART Key, SMART CONTROL UNIT, AND ESL UNIT AT THE SAME TIME

NOTE:

- In this case, it is not necessary to replace the ECM.

Replace the following:

- Smart control unit (page 22-20)
- ESL unit (page 22-20)

1. Bring a new Honda SMART Key near the motorcycle and turn it ON by pushing the ON/OFF button for 1 second. (The green LED blinks five times.)
2. Press the ignition ON switch [1] and turn ignition OFF switch [2] counterclockwise and hold them for 4 seconds.

   If registration is successful, the ignition switch will be turned ON.

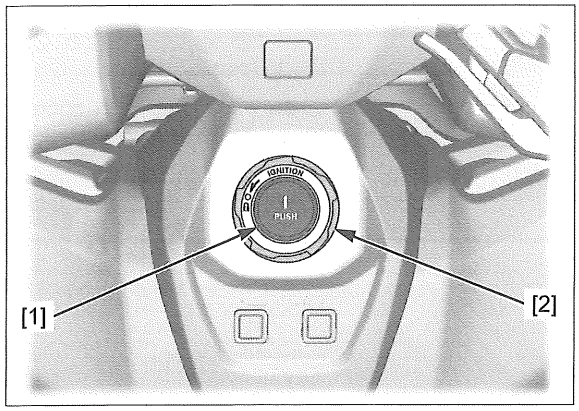

NOTE:

- If there is any problem in the registration, the ESL indicator will indicate the failure code (page 22-19).

3. Rotate the ignition OFF switch counterclockwise to turn the ignition switch OFF.
4. Perform the registration of the other Honda SMART Key if necessary (page 22-14).

SMART CONTROL UNIT REGISTRATION PROCEDURE

NOTE:

- When the smart control unit is to be replaced, replace the smart control unit and Honda SMART Key as a set because the Honda SMART Keys already registered cannot be registered again.
- Never lose the ID tag of the Honda SMART Key because it is necessary in emergency.

Replace the smart control unit (page 22-20).

Prepare new Honda SMART Keys and the ID tag of the lost Honda SMART Key.

Confirm that all Honda SMART Keys are turned OFF by pushing the ON/OFF button. (The red LED blinks five times.)

1. Bring a new Honda SMART Key near the motorcycle and turn it ON by pushing the ON/OFF button for 1 second. (The green LED blinks five times.)
2. Short the registration connector (page 22-13).

   Press the ignition ON switch [1] for more than 4 seconds.

   The buzzer sounds for 2 seconds and the ESL indicator turns on. The smart control unit enters the ID tag number input mode.
3. Confirm the nine digits on the ID tag.

   Press the ignition ON switch the same number of times as the first digit from left of ID number then rotate the ignition OFF switch [2] counterclockwise.

   The buzzer sounds for 1 second and the ESL indicator turns off for 1 second then it turns on.

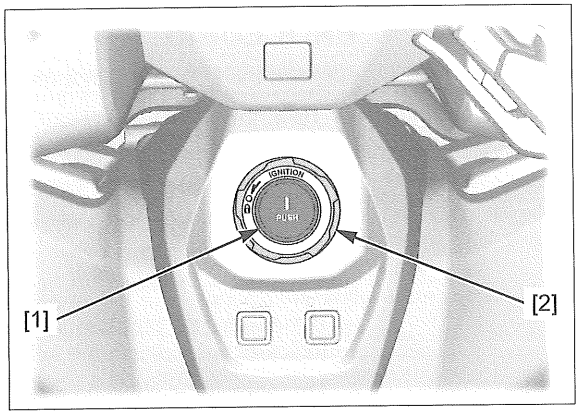

NOTE:

- To input 0 of digit, rotate the ignition OFF switch counterclockwise without pressing the ignition ON switch.
- If the ID number is not input within 1 minute, the input mode is time out. Try again from step 1.

4. Input the 2nd through 9th ID digits in the same procedure as step 3.
5. Wait for 1 second.

   If registration is successful, the ignition switch will be turned ON.

NOTE:

- If there is any problem in the registration, the ESL indicator will indicate the failure code (page 22-19).

6. Disconnect the short connector from the registration connector.
7. Rotate the ignition OFF switch counterclockwise to turn the ignition switch OFF.

ECM REGISTRATION PROCEDURE

Replace the ECM with a new one (page 4-55).

1. Turn the registered Honda SMART Key ON by pushing the ON/OFF button for 1 second.
2. Press the ignition ON switch [1].

   Short the registration connector after more than 15 seconds (page 22-13).
3. Wait for 1 second.

NOTE:

- If there is any problem in the registration, the ESL indicator will indicate the failure code (page 22-19).

4. Disconnect the short connector from the registration connector.
5. Rotate the ignition OFF switch [2] counterclockwise to turn the ignition switch OFF.

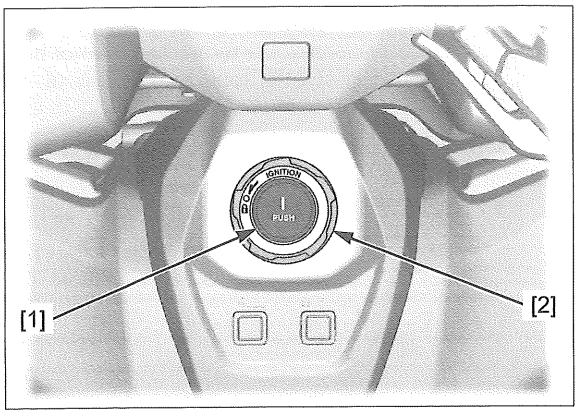

ESL UNIT REGISTRATION PROCEDURE

Replace the ESL unit with a new one (page 22-20).

1. Turn the registered Honda SMART Key ON by pushing the ON/OFF button for 1 second.
2. Short the registration connector (page 22-13) with the ignition switch OFF.
3. Wait for 1 second.

NOTE:

- If there is any problem in the registration, the ESL indicator will indicate the failure code (page 22-19).

4. Disconnect the short connector from the registration connector.

REGISTRATION FAILURE CODE

If the registration is failure, the ESL indicator blinks in the following pattern:

ESL indicator blinking pattern	Cause	Remedy
ON OFF	Communication failure between the Honda SMART Key and smart control unit	Remove the cause of the communication failure.
ON OFF	The Honda SMART Key has been already registered. (Duplicate registration)	–
ON OFF	The Honda SMART Key has been registered into the other motorcycle.	Use a new Honda SMART Key and perform the registration procedure again.
ON OFF	Honda SMART Key registration failure	Perform the registration procedure again.
ON OFF	Communication failure between the ECM and smart control unit	Remove the cause of the communication failure.
ON OFF	ECM registration failure	Perform the registration procedure again.
ON OFF 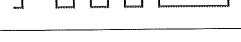	Communication failure between the ESL unit and smart control unit	Remove the cause of the communication failure.
ON OFF	ID code of ESL unit is not initial one.	Perform the registration procedure again using a new ESL unit.
ON OFF	ID codes of ESL unit and smart control unit are disagree.	Perform the registration procedure again with the registered ESL unit and smart control unit.
ON OFF	ESL unit registration failure	Perform the registration procedure again.

REQUIRED PARTS FOR Honda SMART Key SYSTEM PROBLEM

Problem	Required Replacement Parts			
	Honda SMART Key	Smart control unit	ECM	ESL unit
Additional registration of a spare Honda SMART Key.	O	–	–	–
All Honda SMART Key have been lost. (If you have ID tag.)	O	–	–	–
All Honda SMART Key have been lost. (ID tag have been lost too.)	O	O	–	O
Smart control unit is faulty. (If you have ID tag.)	O	O	–	–
Smart control unit is faulty. (ID tag have been lost.)	O	O	–	O
ECM is faulty.	–	–	O	–
ESL unit is faulty.	–	–	–	O

SMART CONTROL UNIT

REMOVAL/INSTALLATION

Remove the front side cowl (page 2-15).

Disconnect the smart control unit 39P (Black) connector [1].

Remove the band [2] and smart control unit [3].

Installation is in the reverse order of removal.

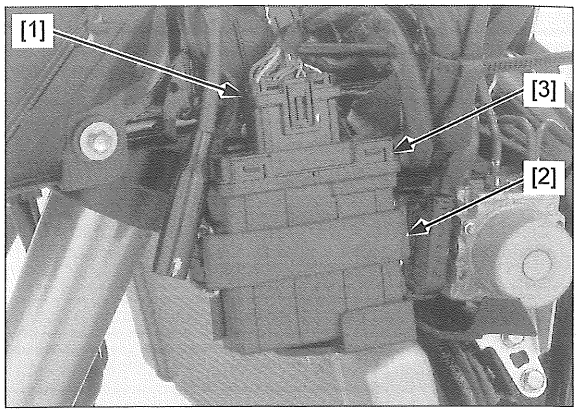

ESL UNIT

REMOVAL/INSTALLATION

Remove the top bridge (page 16-29).

Remove the ESL unit mounting bolts [1] and ESL unit [2].

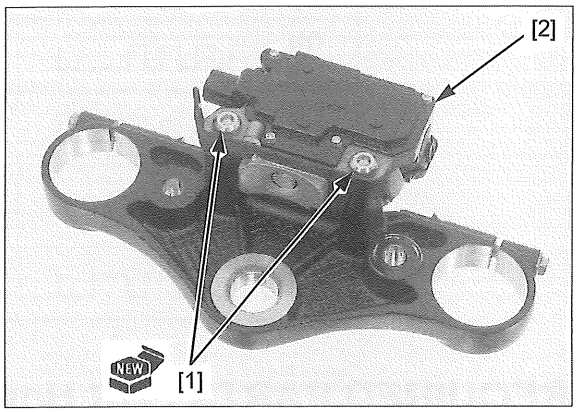

Remove the ESL cover [1] by releasing the tabs [2].

Installation is in the reverse order of removal.

TORQUE:
ESL unit mounting bolt:
26 N·m (2.7 kgf·m, 19 lbf·ft)

NOTE:

- Always replace the ESL unit mounting bolts with new ones.

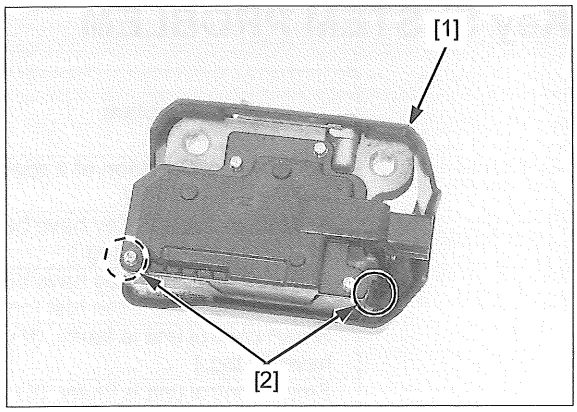

SEAT/FUEL LID OPEN ACTUATOR

REMOVAL/INSTALLATION

Remove the right rear cowl (page 2-25).

Remove the socket bolt [1] and cover [2].

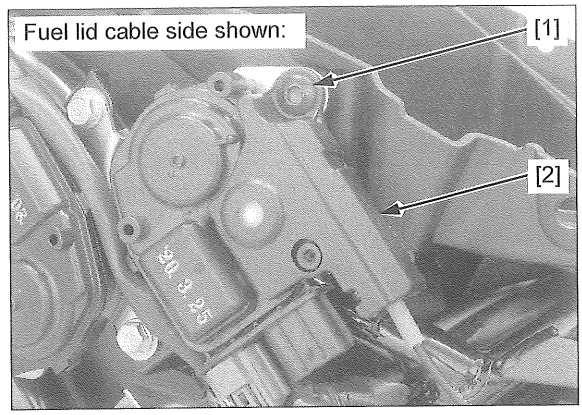

Remove the cable [1] from the actuator stay and disconnect it from the actuator lever.

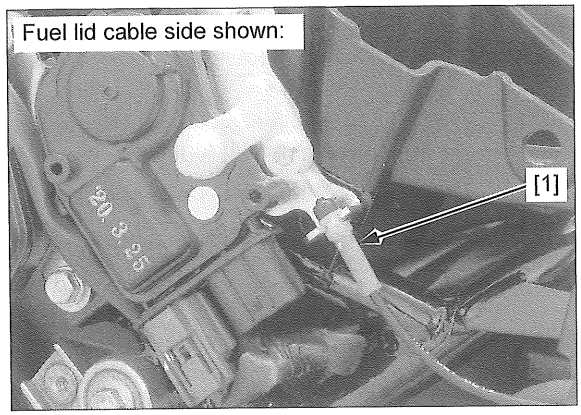

Disconnect the actuator 2P (Gray) connectors [1].

Remove the bolts [2] and actuator/stay assembly [3].

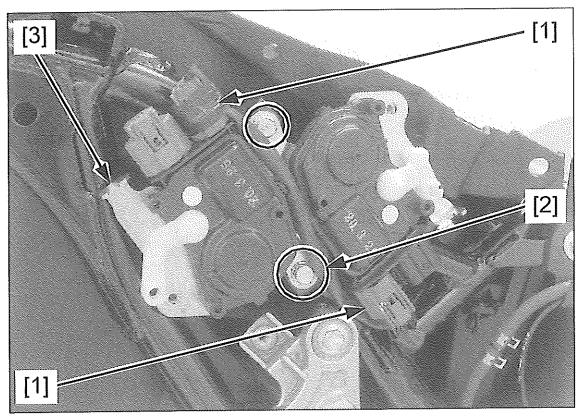

Remove the screws [1] and actuators [2] from the stay.

Installation is in the reverse order of removal.

TORQUE: 1.1 N·m (0.1 kgf·m, 0.8 lbf·ft)

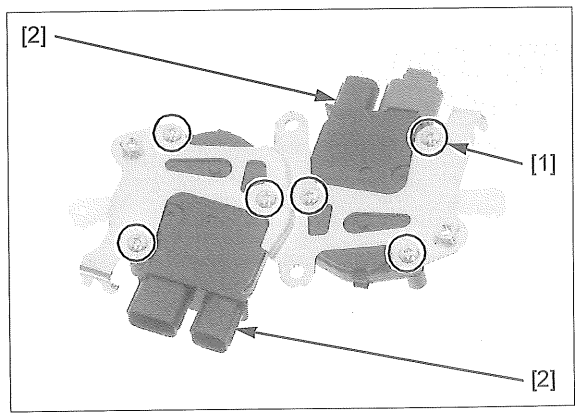

IGNITION SWITCH

REMOVAL/INSTALLATION

Remove the inner cowl/inner center cowl/front inner cowl (page 2-9).

Remove the socket bolts [1] and ignition switch [2].

Installation is in the reverse order of removal.

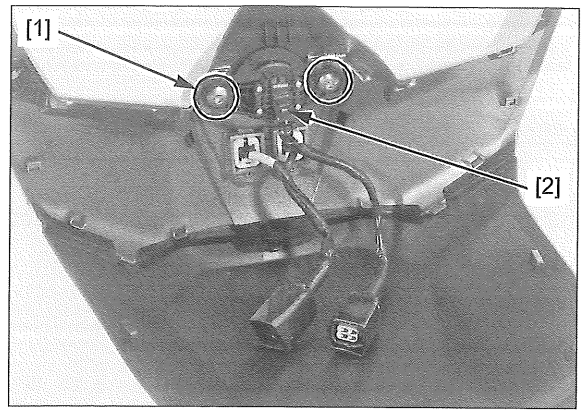

INSPECTION

Disconnect the ignition switch 4P (Black) connector (page 22-22).

Check for continuity between the switch side 4P (Black) connector [1] terminals.

CONNECTION: Green/Black – Red/White

There should be continuity with the ignition ON switch pushed.

If the no continuity, replace the ignition switch (page 22-22).

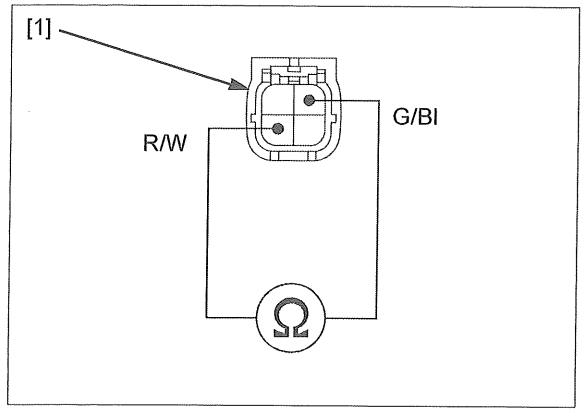

Check for continuity between the switch side 4P (Black) connector [1] terminals.

CONNECTION: Gray/White – Red/White

There should be continuity with the ignition OFF switch counterclockwise.

If the no continuity, replace the ignition switch (page 22-22).

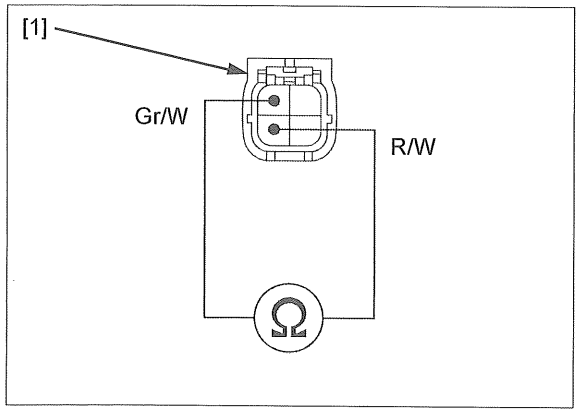

BUZZER

REMOVAL/INSTALLATION

Remove the left rear cowl (page 2-25).

Disconnect the buzzer 2P (Black) connector [1].

Remove the bolt [2], collar [3] and buzzer [4].

Installation is in the reverse order of removal.

TORQUE:

Buzzer bolt:

5.2 N·m (0.5 kgf·m, 3.8 lbf·ft)

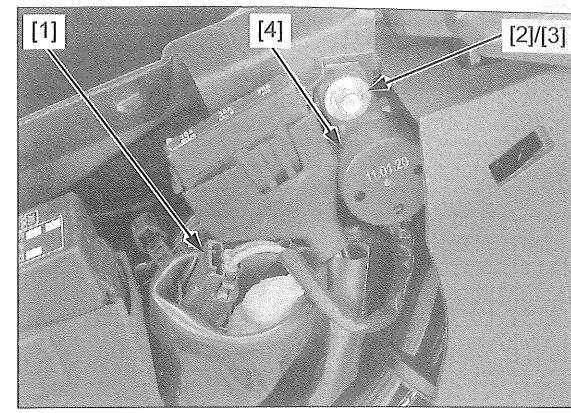

NG DIAGRAM

FO TYPES

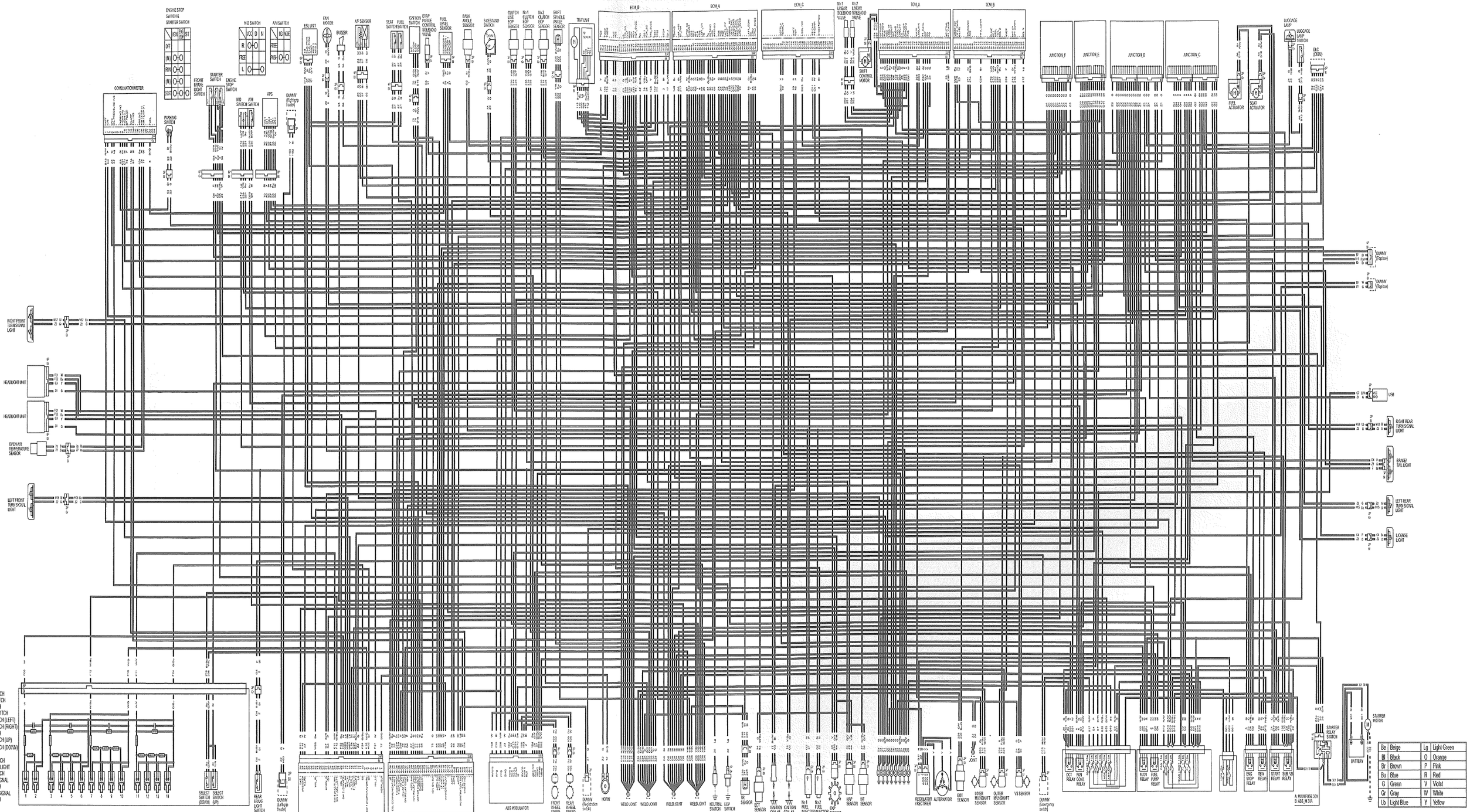

Be	Beige	Lg	Light Green
Bl	Black	O	Orange
Br	Brown	P	Pink
Bu	Blue	R	Red
G	Green	V	Violet
Gr	Gray	W	White
Lb	Light Blue	Y	Yellow

CH TYPE

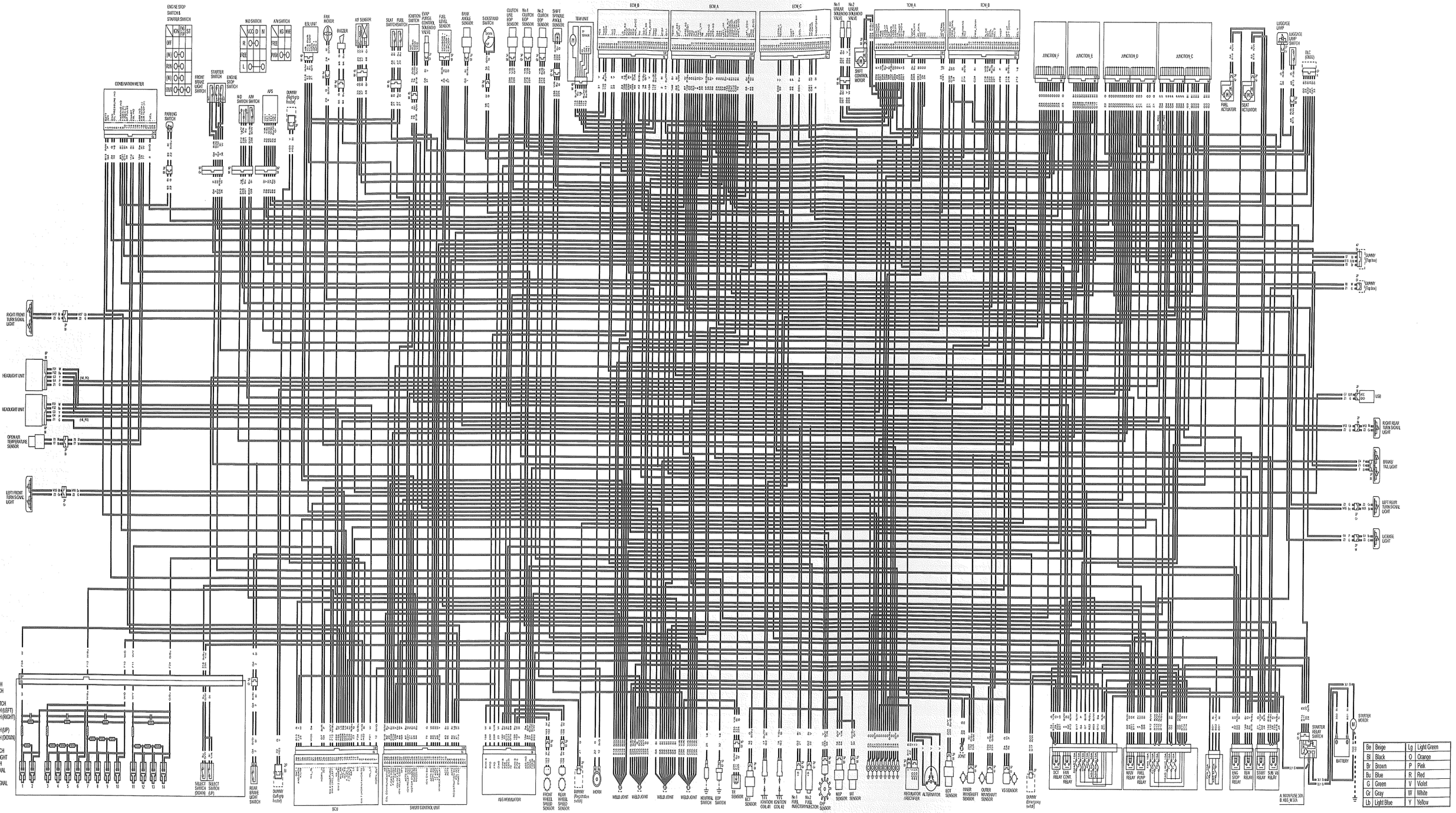
ENGINE STOP SWITCH & STARTER SWITCH
CONBINATION METER
PARKING SWITCH
FRONT BRAKE LIGHT SWITCH
STARTER SWITCH
ENGINE STOP SWITCH
H/D SWITCH
A/H SWITCH
APS
DUMMY (Right grip heater)
ESC UNIT
FAN MOTOR
BUZZER
AF SENSOR
SEAT SWITCH
FUEL SWITCH
IGNITION SWITCH
EVAP PURGE CONTROL SOLENOID VALVE
FUEL LEVEL SENSOR
BANK ANGLE SENSOR
SIDESTAND SWITCH
CLUTCH LINE EOP SENSOR
No.1 CLUTCH EOP SENSOR
No.2 CLUTCH EOP SENSOR
SHIFT SPINDLE ANGLE SENSOR
TBW UNIT
ECM_B
ECM_A
ECM_C
No.1 LINEAR SOLENOID VALVE
No.2 LINEAR SOLENOID VALVE
SHIFT CONTROL MOTOR
TCM_A
TCM_B
JUNCTION_F
JUNCTION_E
JUNCTION_D
JUNCTION_C
FUEL ACTUATOR
SEAT ACTUATOR
LUGGAGE LAMP
LUGGAGE LAMP SWITCH
DLC (OBDII)
DUMMY (Top box)
DUMMY (Top box)
RIGHT FRONT TURN SIGNAL LIGHT
HEADLIGHT UNIT (HI, PO)
HEADLIGHT UNIT (HI, PO)
OPEN AIR TEMPERATURE SENSOR
LEFT FRONT TURN SIGNAL LIGHT
USB
RIGHT REAR TURN SIGNAL LIGHT
BRAKE/ TAIL LIGHT
LEFT REAR TURN SIGNAL LIGHT
LICENSE LIGHT
1: DIMMER SWITCH
2: PASSING SWITCH
3: HORN SWITCH
4: FUNCTION SWITCH
5: SELECT SWITCH (LEFT)
6: SELECT SWITCH (RIGHT)
7: MODE SWITCH
8: SELECT SWITCH (UP)
9: SELECT SWITCH (DOWN)
10: NOT USED
11: LIGHTING SWITCH
12: TURN SIGNAL LIGHT CANCEL SWITCH
13: LEFT TURN SIGNAL LIGHT SWITCH
14: RIGHT TURN SIGNAL LIGHT SWITCH
SELECT SWITCH (DOWN)
SELECT SWITCH (UP)
REAR BRAKE LIGHT SWITCH
DUMMY (Left grip heater)
ECU
SMART CONTROL UNIT
ABS MODULATOR
FRONT WHEEL SPEED SENSOR
REAR WHEEL SPEED SENSOR
DUMMY (Registration switch)
HORN
WELD JOINT
WELD JOINT
WELD JOINT
WELD JOINT
NEUTRAL SWITCH
EOP SWITCH
EX SENSOR
ECT SENSOR
IGNITION COIL #1
IGNITION COIL #2
No.1 FUEL INJECTOR
No.2 FUEL INJECTOR
OIP SENSOR
MAP SENSOR
IAT SENSOR
REGULATOR /RECTIFIER
ALTERNATOR
EGR SENSOR
INNER MAINSHAFT SENSOR
OUTER MAINSHAFT SENSOR
VS SENSOR
DUMMY (Emergency switch)
DCT FAN RELAY
DCT CONT. RELAY
WSH RELAY
FUEL PUMP RELAY
ENG STOP RELAY
TBW RELAY
START RELAY
START SUB WIRE RELAY
A: MAIN FUSE 30A
B: ABS M 30A
STARTER RELAY SWITCH
STARTER MOTOR
BATTERY
Be Beige
Bl Black
Br Brown
Bu Blue
G Green
Gr Gray
Lb Light Blue
Lg Light Green
O Orange
P Pink
R Red
V Violet
W White
Y Yellow

WIRING DIAGRAM 23-2

A/F SENSOR 4-61
A/M SWITCH TROUBLESHOOTING 11-37
ABS FUSE 19-26
ABS INDICATOR CIRCUIT TROUBLESHOOTING 19-11
ABS MODULATOR 19-25
ABS SYSTEM DIAGRAM 19-4
ABS SYSTEM LOCATION 19-3
ABS TROUBLESHOOTING 19-13
ABS TROUBLESHOOTING INFORMATION 19-5
AIR CLEANER 3-5
AIR CLEANER HOUSING 7-11
ALTERNATOR CHARGING COIL 20-8
ALTERNATOR COVER 12-3
AUTHENTICATION ID REGISTRATION PROCEDURE 22-13
BALANCER 13-12
BANK ANGLE SENSOR 4-59
BATTERY 20-5
BCU 21-23
BODY CONTROL SYSTEM DIAGRAM 21-27
BODY CONTROL SYSTEM DTC INDEX 21-28
BODY CONTROL SYSTEM DTC TROUBLESHOOTING 21-29
BODY CONTROL SYSTEM TROUBLESHOOTING INFORMATION 21-26
BODY PANEL LOCATIONS 2-3
BRAKE FLUID 3-18
BRAKE FLUID REPLACEMENT/AIR BLEEDING 18-5
BRAKE LIGHT SWITCH 21-20
BRAKE LOCK OPERATION 3-20
BRAKE PAD/DISC 18-7
BRAKE PADS WEAR 3-19
BRAKE SYSTEM 3-19
BRAKE/TAILLIGHT 21-6
BUZZER 22-23
CABLE & HARNESS ROUTING 1-20
CAM CHAIN TENSIONER 10-8
CAMSHAFT 10-10
CANISTER 7-16
CENTER LOWER COVER 2-21
CENTERSTAND 2-31
CHARGING SYSTEM INSPECTION 20-6
CKP SENSOR 4-60
CLUTCH EOP SENSOR 11-60
CLUTCH INITIALIZE LEARNING (TCM) 11-62
CLUTCH OIL FILTER 3-11
COMBINATION METER 21-7
COMPONENT LOCATION
- ALTERNATOR/STARTER CLUTCH 12-2
- CRANKCASE/TRANSMISSION/BALANCER 13-3
- CRANKSHAFT/PISTON/CYLINDER 14-3
- CYLINDER HEAD/VALVES 10-3
- DUAL CLUTCH TRANSMISSION (DCT) 11-4
- ENGINE REMOVAL/INSTALLATION 15-3
- FRONT WHEEL/SUSPENSION/STEERING 16-3
- FUEL SYSTEM 7-2
- HYDRAULIC BRAKE 18-3
- REAR WHEEL/SUSPENSION 17-3

COOLANT REPLACEMENT 8-4
COOLING SYSTEM 3-13
CRANKCASE ASSEMBLY 13-15
CRANKCASE BREATHER 3-5
CRANKCASE SEPARATION 13-4
CRANKPIN BEARING 14-9
CRANKSHAFT 14-4
CYLINDER COMPRESSION TEST 10-4
CYLINDER HEAD 10-13
CYLINDER HEAD COVER 10-4
DCT DTC TROUBLESHOOTING 11-11
DCT ELECTRICAL SYSTEM LOCATION 11-5
DCT SYMPTOM TROUBLESHOOTING 11-3
DCT SYSTEM DIAGRAM 11-6
DCT TROUBLESHOOTING INFORMATION 11-7
DRIVE CHAIN 3-14
DRIVE CHAIN CASE 2-31
DRIVE CHAIN SLIDER 3-17
DTC INDEX
- ANTI-LOCK BRAKE SYSTEM (ABS) 19-9
- DUAL CLUTCH TRANSMISSION (DCT) 11-9
- PGM-FI SYSTEM 4-10

DUAL CLUTCH 11-46
ECM/TCM 4-55
ECT SENSOR 4-58
EMERGENCY MODE 22-11
EMISSION CONTROL SYSTEMS 1-54
ENGINE IDLE SPEED 3-12
ENGINE INSTALLATION 15-9
ENGINE OIL 3-9
ENGINE OIL FILTER 3-10
ENGINE OIL PRESSURE INDICATOR/ EOP SWITCH 21-14
ENGINE REMOVAL 15-4
EOT SENSOR 11-60
ESL UNIT 22-20
EVAP PURGE CONTROL SOLENOID VALVE 7-15
EVAPORATIVE EMISSION CONTROL SYSTEM 3-14
EXHAUST PIPE/MUFFLER 2-34
FENDER A STAY 2-29
FLOOR SKIRT/FLOOR STEP 2-14
FLYWHEEL 12-4
FORK 16-15
FRONT BRAKE CALIPER 18-16
FRONT FENDER 2-6
FRONT LOWER COVER 2-13
FRONT MASTER CYLINDER 18-12
FRONT SIDE COWL 2-15
FRONT WHEEL 16-11
FUEL INJECTOR 7-13
FUEL LEVEL SENSOR 21-15
FUEL LID BRACKET 2-22
FUEL LINE 3-4
FUEL LINE INSPECTION 7-3
FUEL PUMP UNIT 7-7
FUEL TANK 7-6
GEARSHIFT LINKAGE 11-54
GRAB RAIL 2-33
HANDLE FRONT COVER 2-8
HANDLE REAR COVER 2-9
HANDLE UPPER CENTER COVER 2-8
HANDLEBAR 16-4
HANDLEBAR SWITCHES 21-17
HEADLIGHT 21-3
HEADLIGHT AIM 3-22
HEAT GUARD 2-24
HOLDER METER COVER 2-12
Honda SMART Key SYSTEM DTC INDEX 22-6
Honda SMART Key SYSTEM DTC TROUBLESHOOTING 22-7
Honda SMART Key SYSTEM TROUBLESHOOTING INFORMATION 22-4
HORN 21-20
HSVCs (Honda Smartphone Voice Control system) (Except KO, CH types) 21-12
IAT SENSOR 4-58
IGNITION COIL 5-9
IGNITION SWITCH 22-22
IGNITION SYSTEM INSPECTION 5-6

IGNITION TIMING 5-9
INNER COVER 2-11
INNER COWL/INNER CENTER COWL/FRONT INNER COWL 2-9
INNER PANEL 2-7
LEFT REAR COVER 2-36
LICENSE LIGHT 21-7
LICENSE LIGHT BRACKET 2-28
LICENSE LIGHT COVER 2-28
LUBRICATION & SEAL POINTS 1-16
LUBRICATION SYSTEM DIAGRAM 9-3
LUGGAGE BOX COVER 2-21
LUGGAGE BOX LIGHT/LUGGAGE BOX LIGHT SWITCH 21-22
LUGGAGE BOX/BATTERY BOX 2-26
MAIN JOURNAL BEARING 14-6
MAINSHAFT SENSOR 11-57
MAINTENANCE SCHEDULE 3-2
MAP SENSOR 4-57
MIL CIRCUIT TROUBLESHOOTING 4-54
MODEL IDENTIFICATION 1-3
NEUTRAL SWITCH 11-61
NUTS, BOLTS, FASTENERS 3-24
OIL PRESSURE INSPECTION 9-4
OIL PUMP 9-4
OIL STRAINER 9-6
OPEN AIR TEMPERATURE SENSOR 21-13
PARKING BRAKE CALIPER 18-20
PARKING BRAKE INDICATOR/SWITCH 21-16
PARKING BRAKE LEVER 18-22
PGM-FI SYMPTOM TROUBLESHOOTING 4-9
PGM-FI SYSTEM DIAGRAM 4-4
PGM-FI SYSTEM DTC TROUBLESHOOTING 4-13
PGM-FI SYSTEM LOCATION 4-3
PGM-FI TROUBLESHOOTING INFORMATION 4-5
PILLION STEP HOLDER 2-33
PISTON/CYLINDER 14-12
PRIMARY DRIVE GEAR 11-50
RADIATOR 8-7
RADIATOR COOLANT 3-13
RADIATOR RESERVE TANK 8-12
REAR BRAKE CALIPER 18-18
REAR CENTER LOWER COVER 2-25
REAR CENTER UPPER COVER 2-25
REAR COWL 2-25
REAR FENDER B 2-30
REAR FENDER C 2-30
REAR MASTER CYLINDER 18-14
REAR WHEEL 17-4
REARVIEW MIRROR 2-5
REGULATOR/RECTIFIER 20-7
RELAY 21-22
REQUIRED PARTS FOR Honda SMART Key SYSTEM PROBLEM 22-19
RIGHT CRANKCASE COVER 11-38
ROCKER ARM 10-5
SEAT 2-32
SEAT/FUEL LID OPEN ACTUATOR 22-21
SERVICE INFORMATION
- ALTERNATOR/STARTER CLUTCH 12-2
- ANTI-LOCK BRAKE SYSTEM (ABS) 19-2
- BATTERY/CHARGING SYSTEM 20-2
- COOLING SYSTEM 8-2
- CRANKCASE/TRANSMISSION/BALANCER 13-2
- CRANKSHAFT/PISTON/CYLINDER 14-2
- CYLINDER HEAD/VALVES 10-2
- DUAL CLUTCH TRANSMISSION (DCT) 11-2
- ELECTRIC STARTER 6-2
- ENGINE REMOVAL/INSTALLATION 15-2
- FRAME/BODY PANELS/EXHAUST SYSTEM 2-2
- FRONT WHEEL/SUSPENSION/STEERING 16-2
- FUEL SYSTEM 7-2
- Honda SMART Key SYSTEM 22-2
- HYDRAULIC BRAKE 18-2
- IGNITION SYSTEM 5-2
- LIGHTS/METERS/SWITCHES 21-2
- LUBRICATION SYSTEM 9-2
- MAINTENANCE 3-2
- PGM-FI SYSTEM 4-2
- REAR WHEEL/SUSPENSION 17-2

SERVICE RULES 1-2
SHIFT CONTROL MOTOR/REDUCTION GEARS 11-52
SHIFT SPINDLE ANGLE SENSOR 11-59
SHOCK ABSORBER 17-10
SHOCK LINKAGE 17-8
SIDESTAND
- FRAME BODY PANELS/EXHAUST SYSTEM 2-32
- MAINTENANCE 3-22

SIDESTAND SWITCH 4-62
SMART CONTROL UNIT 22-20
SPARK PLUG 3-6
SPECIAL TOOL LIST 1-18
SPECIFICATIONS 1-4
STARTER CLUTCH 12-7
STARTER MOTOR 6-5
STARTER RELAY SWITCH 6-7
STATOR 12-9
STEERING HEAD BEARINGS 3-24
STEERING STEM 16-29
STEP PANEL/SIDE PANEL 2-18
SUSPENSION 3-23
SWINGARM 17-11
SYSTEM DIAGRAM
- BATTERY/CHARGING SYSTEM 20-4
- ELECTRIC STARTER 6-4
- Honda SMART Key SYSTEM 22-3
- IGNITION SYSTEM 5-5

SYSTEM FLOW PATTERN 8-3
SYSTEM LOCATION
- BATTERY/CHARGING SYSTEM 20-4
- ELECTRIC STARTER 6-3
- Honda SMART Key SYSTEM 22-2
- IGNITION SYSTEM 5-4
- LIGHTS/METERS/SWITCHES 21-2

SYSTEM TESTING 8-4
TCM 11-61
TECHNICAL FEATURES 1-56
THERMOSTAT/THERMOSTAT HOUSING 8-5
THROTTLE BODY 7-13
THROTTLE BODY (CH type only) 3-4
THROTTLE OPERATION 3-4
TORQUE VALUES 1-10
TR SENSOR 11-58
TRANSMISSION 13-5
TROUBLESHOOTING
- ALTERNATOR/STARTER CLUTCH 12-2
- BATTERY/CHARGING SYSTEM 20-3
- COOLING SYSTEM 8-2
- CRANKCASE/TRANSMISSION/BALANCER 13-2
- CRANKSHAFT/PISTON/CYLINDER 14-2
- CYLINDER HEAD/VALVES 10-2
- ELECTRIC STARTER 6-2
- FRAME/BODY PANELS/EXHAUST SYSTEM 2-2
- FRONT WHEEL/SUSPENSION/STEERING 16-2
- HYDRAULIC BRAKE 18-2
- IGNITION SYSTEM 5-3
- LUBRICATION SYSTEM 9-2
- REAR WHEEL/SUSPENSION 17-2

TURN SIGNAL LIGHT 21-5
UPPER METER COVER/FRONT COWL/AIR INTAKE COVER 2-17
USB CHARGER UNIT 21-21
VALVE CLEARANCE 3-7
VS SENSOR 4-57
WATER PUMP 8-10
WHEEL SPEED SENSOR 19-22
WHEELS/TIRES 3-24
WINDSCREEN 2-5
WIRING DIAGRAM 23-2

HONDA

The Power of Dreams

© Honda Motor Co., Ltd 2021
62MKV01

Published by Honda Motor Co.,Ltd
(E) (YD) SP 2021.08
Printed in Belgium